NATIONAL MARINE FISHERIES SERVICE INSTRUCTION 01-106-02
OCTOBER 2004

Fisheries Management
Bycatch, NMFSPD 01-106

EVALUATING BYCATCH: A NATIONAL APPROACH TO STANDARIZED BYCATCH MONITORING PROGRAMS

NOTICE: This publication is available at:
http://www.nmfs.noaa.gov/op/pds/categories/01-fisheries_management.html

OPR: F/SF (K. Abrams) **Certified by:** F/SF (E. Menashes)
Type of Issuance: Renewed August 2014

SUMMARY OF REVISIONS:

Evaluating Bycatch

A National Approach to Standardized Bycatch Monitoring Programs

U.S. Department of Commerce
National Oceanic and Atmospheric Administration
National Marine Fisheries Service

NOAA Technical Memorandum NMFS-F/SPO-66
October 2004

Evaluating Bycatch:
A National Approach to Standardized Bycatch Monitoring Programs

NOAA Technical Memorandum NMFS-F/SPO-66
October 2004

U.S. Department of Commerce
Donald L. Evans, Secretary

National Oceanic and Atmospheric Administration
Vice Admiral Conrad C. Lautenbacher, Jr., USN (Ret.)
Under Secretary for Oceans and Atmosphere

National Marine Fisheries Service
William T. Hogarth, Assistant Administrator for Fisheries

Acknowledgments

The methodological approach for determining bycatch was developed through a series of meetings and conference calls by a team of the National Marine Fisheries Service (NMFS) over a 9-month period beginning in early 2003. This was followed by internal and external reviews and responses that resulted in this final report. The team was made up of fisheries managers and scientists from NMFS Regional Offices, Science Centers and headquarters:

Joseph E. Powers, Chair	Southeast Fisheries Science Center, Miami, Florida
Lee Benaka	Office of Sustainable Fisheries, Silver Spring, Maryland
Victoria R. Cornish	Office of Science and Technology, Silver Spring, Maryland
Jonathan Cusick	Northwest Fisheries Science Center, Seattle, Washington
Tanya Dobrzynski	Office of Protected Resources, Silver Spring, Maryland
Michael Fogarty	Northeast Fisheries Science Center, Woods Hole, Massachusetts
Svein Fougner	Southwest Regional Office, Long Beach, California
James M. Nance	Southeast Fisheries Science Center, Galveston, Texas
Joseph M. Terry	Alaska Fisheries Science Center, Seattle, Washington

Colleagues throughout NMFS provided voluminous data, information, comments and suggestions throughout the development of this report. We thank them for their efforts in ensuring that all perspectives were heard and for providing insight into frequently contentious aspects of bycatch in their regions.

Cover photo credits: background photos by Conor Nolan, MRAG Americas (under contract to the NMFS Observer Program), and Tom Wilson, NMFS Observer; small photos were taken by Brett Jagger, NMFS Groundfish Observer.

To be cited as:

NMFS (National Marine Fisheries Service). 2004. Evaluating bycatch: a national approach to standardized bycatch monitoring programs. U.S. Dep. Commer., NOAA Tech. Memo. NMFS-F/SPO-66, 108 p. On-line version, http://spo.nmfs.noaa.gov/tm

For additional copies, contact:

NMFS Office of Sustainable Fisheries
1315 East-West Highway, 13th Floor
Silver Spring, MD 20910

Executive Summary

On March 6, 2003, the National Marine Fisheries Service (NMFS) issued a National Bycatch Strategy to address issues related to the management of bycatch within the Nation's fisheries. One component of that strategy was the establishment of a National Working Group on Bycatch (NWGB) to develop a national approach to standardized bycatch reporting methodologies and monitoring programs. This work is to be the basis for regional teams (also established in the National Bycatch Strategy) to make fishery-specific recommendations.

The NWGB reviewed regional issues related to fisheries and bycatch and discussed advantages and disadvantages of various methods for estimating bycatch, including: (1) fishery-independent surveys; (2) self-reporting through logbooks, trip reports, dealer reports, port sampling, and recreational surveys; (3) at-sea observation, including observers, digital video cameras, digital observers, and alternative platform and remote monitoring; and (4) stranding networks. All of the methods may contribute to useful bycatch estimation programs, but at-sea observation (observers or electronic monitoring) provides the best mechanism to obtain reliable and accurate bycatch estimates for many fisheries. Often, observer programs also will be the most cost-effective of these alternatives.

At-sea sampling designs should be formulated to achieve precision goals for the least amount of observation effort, while also striving to increase accuracy. This is done through random sample selection, by developing appropriate sampling strata and sampling allocation procedures and by implementing appropriate tests for bias. These designs and tests are needed for each fishery. Sampling programs will be driven by the precision and accuracy required by managers to address management needs: for estimating management quantities such as allowable catches through a stock assessment, for evaluating bycatch relative to a management standard such as allowable take and for developing mitigation mechanisms. The recommended precision goals for estimates of bycatch are defined in terms of the coefficient of variation (CV) of each estimate. The recommended goals are as follows:

Protected Species

For marine mammals and other protected species, including seabirds and sea turtles, the recommended precision goal is a 20-30% *CV* for estimates of bycatch for each species/stock taken by a fishery.

Fishery Resources

For fishery resources, excluding protected species, caught as bycatch in a fishery, the recommended precision goal is a 20-30% *CV* for estimates of total discards (aggregated over all species) for the fishery; or if total catch cannot be divided into discards and retained catch then the goal is a 20-30% *CV* for estimates of total catch.

These CV goals are the levels of precision that NMFS will strive to achieve. However, it is important to recognize that:

- The goals may in some instances exceed minimum statutory requirements.
- There are intermediate steps in increasing precision that may not immediately achieve the goals but that represent progress nonetheless.
- There are circumstances in which higher levels of precision may be desired, particularly when management is needed on fine spatial or temporal scales.
- There are circumstances under which meeting these precision goals would not be an efficient use of public resources.
- Funding and logistical constraints, safety considerations and additional objectives for observer programs may prevent the attainment of these goals.
- When a numeric limit is set for a bycatch species, the uncertainty associated with setting that limit and the methods used for addressing that uncertainty are two of the factors that determine the appropriate CV for the bycatch estimate for that species.
- If CVs of 20-30% for individual fishery species can be obtained and are needed for management, then this precision should be encouraged.
- In some instances decreasing bias (including that caused by the observer effect) will be more important than increasing precision.
- The absolute precision (in numbers of animals) may be more appropriate than the percent precision for some protected species (see Appendix 4 for technical comments on this issue).
- If bycatch is being monitored principally in order to manage a fishery within bycatch limits, an alternative to the above CV goals is to set the bycatch limits based on a management regime that incorporates uncertainty (see Section 5.4).
- Flexibility is needed when setting CV targets for specific fisheries and bycatch species.
- A decision to accept lower precision should be based on analyses and understanding of the implications of that decision.

Eighty-four fisheries were evaluated for bycatch monitoring and classified into one of five categories (*None*, *Baseline*, *Pilot*, *Developing*, *or Mature)*. Additionally all of these fisheries were rated as to their vulnerability (*High, Moderate* or *Low*) to bycatch of three types of resources: (1) fishery resources (excluding protected species); (2) marine mammals; and (3) other protected species, that is, ESA-listed species (excluding marine mammals), other sea turtles and other seabirds. Of the 84 fisheries, 5% have a Mature observer program, 20% were Developing (25% were either Mature or Developing), 10% have a Pilot program, 29% have a Baseline program and 37% do not have a program (None). (Note that the percentages sum to 101 due to rounding.) Thirty-one percent of these 84 fisheries are rated *High* for bycatch vulnerability of one or more of the three resource types (thus, 69% are rated *Moderate* or *Low* for all three types of resources); 6% of these fisheries are both rated *High* for bycatch vulnerability of one or more of the three resource types and recommended for establishment of Baseline or Pilot observer programs. A strategy for bycatch monitoring was developed based upon the vulnerability of a fishery, the adequacy of current monitoring programs and sampling cost estimates.

Table of Contents

Acknowledgments iii

Executive Summary v

1. Introduction 1

2. Statutory Requirements and International Agreements 3
   - 2.1 Magnuson-Stevens Fishery Conservation and Management Act 3
   - 2.2 Endangered Species Act 4
   - 2.3 Marine Mammal Protection Act 5
   - 2.4 FAO Code of Conduct for Responsible Fisheries 6

3. Regional Characteristics of Bycatch 7
   - 3.1 Southwest Region 7
   - 3.2 Southeast Region 9
   - 3.3 Northwest Region 12
   - 3.4 Alaska Region 14
     - 3.4.1 Groundfish Fisheries 14
     - 3.4.2 Pacific Halibut Fisheries 17
     - 3.4.3 MMPA Category II Salmon Fisheries 17
   - 3.5 Northeast Region 18
   - 3.6 Pacific Islands Region 20

4. Alternative Methods for Monitoring Bycatch 23
   - 4.1 Fishery-Independent Surveys 23
     - 4.1.1 Costs of Estimating Bycatch from Fishery-Independent Surveys 26
     - 4.1.2 Safety Aboard Fishery-Independent Surveys 27
     - 4.1.3 Summary of Fishery-Independent Surveys 27
   - 4.2 Fishery-Dependent Self-Reporting 28
     - 4.2.1 Logbooks 28
       - 4.2.1.1 Accuracy of Logbooks 28
       - 4.2.1.2 Costs Associated with Logbook Programs 32
       - 4.2.1.3 Safety and Logistics of Logbooks 32
       - 4.2.1.4 Logbook Program Summary 32

4.2.2 Port Sampling . . . 33
4.2.3 Recreational Sampling . . . 33
4.3 At-Sea Observations of Fishing Operations . . . 34
4.3.1 At-Sea Observers . . . 34
4.3.1.1 Estimating Bycatch . . . 34
4.3.1.2 Precision of Bycatch Estimates . . . 35
4.3.1.3 Accuracy and Bias of Bycatch Estimates . . . 37
4.3.1.4 Cost and Logistics in Observer Programs . . . 39
4.3.1.5 Safety in Observer Programs . . . 41
4.3.1.6 Observer Programs Summary . . . 41
4.3.2 Digital Video Cameras . . . 42
4.3.3 Digital Observers . . . 43
4.3.4 Alternate Platforms and Remote Monitoring . . . 43
4.4 Stranding Networks . . . 44
4.5 Summary . . . 45

5. Estimation of Bycatch . . . 47
5.1 Definition of Bycatch and Precision . . . 47
5.2 Estimation from At-Sea Observations . . . 48
5.2.1 Sample Selection . . . 50
5.2.2 Sampling Strata . . . 52
5.2.3 Sample Allocation . . . 52
5.2.4 Estimators . . . 53
5.2.5 Sample Size Requirements . . . 55
5.2.6 Accuracy and Bias . . . 55
5.3 Precision of Bycatch Estimates . . . 55
5.3.1 Management Uses of Bycatch Estimates . . . 55
5.3.1.1 Assessment Uses . . . 56
5.3.1.2 Monitoring Relative to Management Standards . . . 56
5.3.1.3 Developing Mitigation Plans . . . 57
5.3.2 Precision of Bycatch Estimates from Fisheries . . . 57
5.4 Precision Goals for Estimating Bycatch from a Fishery . . . 58
5.5 Other Factors That May Affect Observer Coverage Levels . . . 60

6. Status of At-Sea Observation Programs . . . 63
6.1 A Survey of Observation Programs . . . 63
6.2 Enhancement of Observer Programs . . . 64

6.2.1 Criteria for Enhancing Observer Programs 64
6.2.2 Enhanced Sample Sizes and Costs 76

7. Vulnerability of Fisheries to Adverse Impacts of Bycatch 79
7.1 Vulnerability Criteria for Fishery Resources 79
7.2 Vulnerability Criteria for Marine Mammals 80
7.3 Vulnerability Criteria for Other Protected Species, Including Seabirds 81
7.4 Bycatch Vulnerability of Fisheries 81

8. Strategies to Address Bycatch 85
8.1 The Nature and Source of the Bycatch Problem 85
8.2 Information Needed to Implement an Effective and Efficient Solution to the Bycatch Problem for the Fishery 86
8.3 Expected Net Benefits 87
8.4 Setting National Priorities for Improving Bycatch Monitoring 87

9. Literature Cited 89

Appendix 1.

Definition of Bycatch Terms
(from NMFS 1998a) 93

Appendix 2.

A Characterization of the Relationship Between the Precision of the Assessment Components and the Precision of Management Quantities 95

Appendix 3.

Precision of a Bycatch Estimate of an Aggregate of Species and the Precision of Estimates of Individual Species within the Aggregate 97

Appendix 4.

Comments on Precision Requirements for Rare-event Species 99

Appendix 5.

NMFS Objectives, Protocol, and Recommended Precision Goals
for Standardized Bycatch Reporting Methodologies 101

Appendix 6.

Acronyms Used in this Report 107

1. Introduction

Bycatch for the purposes of this report is defined as the discarded catch of any living marine resource plus unobserved mortality[1] due to a direct encounter with fishing gear. This definition is based on the bycatch definition that appears in the 1998 National Marine Fisheries Service (NMFS) report *Managing the Nation's Bycatch* (NMFS 1998a)[2] but it does not include retained incidental catch as a component of bycatch. However, NMFS is aware that for some species, such as protected species, the primary management concern is the level of incidental catch, not the disposition of that catch. To meet its stewardship responsibilities, NMFS is committed both to account for target catch, retained incidental catch and bycatch and to decrease each of these three sources of fishing morality as appropriate to prevent overfishing, to rebuild overfished stocks and in general to provide the greatest net benefits to the Nation over time from the fisheries.

Bycatch occurs if a fishing method is not perfectly selective. A fishing method is perfectly selective if it results in the catch and retention only of the desired size, sex, quality, and quantity of the desired species without other fishing-related mortality (See Appendix 1 for related definitions from NMFS 1998a). Very few fishing methods are perfectly selective and typically the discard survival rate is less than 100 %; therefore, bycatch is a source of fishing mortality in most fisheries.

The Magnuson-Stevens Fishery Conservation and Management Act (MSA), the Endangered Species Act (ESA), the Marine Mammal Protection Act (MMPA), and international agreements identify the stewardship responsibilities of NMFS (NOAA Fisheries) to lead and coordinate the Nation's collaborative effort to monitor and reduce the bycatch of living marine resources. As part of its efforts to meet these responsibilities, NMFS reported on the scope and complexity of bycatch in the United States and approaches to addressing bycatch problems (NMFS 1998a). In early 2003, NMFS developed a National Bycatch Strategy to monitor and mitigate bycatch within the Nation's fisheries. Within that strategy, a National Working Group on Bycatch (NWGB) was appointed to formulate procedures for monitoring bycatch, in particular to provide information that could be used to develop *standardized bycatch reporting*

---

[1]Unobserved mortality is mortality of living marine resources due to a direct encounter with fishing gear that does not result in the capture of that species by a fisherman. This includes mortality due to lost or discarded fishing gear, as well as fish and other species that escape from fishing gear before it is retrieved but die due to the stress or injury resulting from the encounter.

[2] NMFS (1998a) notes: After careful review of the various definitions of *bycatch* and associated terms, NMFS considered the definitions contained in the Magnuson-Stevens Act as the basis for development of an inclusive definition of *bycatch*. The Magnuson-Stevens Act defines *bycatch* as "fish which are harvested in a fishery, but which are not sold or kept for personal use . . . " To fully meet the agency's responsibilities, as defined principally by the Magnuson-Stevens Act, the Marine Mammal Protection Act, and the Endangered Species Act, NMFS expanded this definition. Specifically, living marine resources other than "fish" as defined in the Magnuson-Stevens Act (i.e., marine mammals and seabirds) were included to consider all species taken or encountered in marine fisheries and "retained catch of non-target species was included."

methodologies. This report presents the results of the efforts of the NWGB and should guide the NMFS efforts to further develop bycatch monitoring and mitigation programs.

The report includes the following: (1) a review of the statutory requirements and international agreements to monitor and reduce bycatch; (2) updated discussions of the regional perspectives on bycatch problems; (3) an evaluation of the options that are available to monitor bycatch; (4) an evaluation of statistical design and precision criteria for monitoring bycatch; (5) a fishery-by-fishery examination of current monitoring capabilities; and (6) suggested priorities for addressing bycatch problems.

2. Statutory Requirements and International Agreements

NMFS has a variety of bycatch monitoring and reduction responsibilities. They are identified in its governing statutes and in international agreements. The former (e.g., the MSA, ESA, and MMPA) include bycatch responsibilities that were constructed to respond to bycatch concerns for different species in different ways. Throughout this report, bycatch monitoring and reduction activities and responsibilities should be viewed within the context of relevant statutory requirements and standards for fish, marine mammals, and other protected species, including seabirds and sea turtles. Links to these laws, as well as a variety of additional bycatch-related resources, are available at the NMFS bycatch website: http://nmfs.noaa.gov/bycatch.htm

2.1 Magnuson-Stevens Fishery Conservation and Management Act

The 1996 amendments to what is now titled the Magnuson-Stevens Fishery Conservation and Management Act (MSA) defined the term "bycatch" and required that it be minimized to the extent practicable. Bycatch, as defined by the MSA (16 U.S.C. § 1802 (2)), "means fish which are harvested in a fishery, but which are not sold or kept for personal use, and includes economic discards and regulatory discards. Such a term does not include fish released alive under a recreational catch and release fishery management program." The term "fish" is defined in the MSA to mean "finfish, mollusks, crustaceans, and all other forms of marine animal and plant life other than marine mammals and seabirds." Therefore, the bycatch reduction and monitoring requirements in the MSA apply to a broad range of living marine species, including finfish and shellfish, as well as sea turtles and deep-water corals, but they do not apply to marine mammals and birds. Economic discards are "fish which are the target of a fishery, but which are not retained because of an undesirable size, sex, or quality, or other economic reason." "The term 'regulatory discards' means fish harvested in a fishery which fishermen are required by regulation to discard whenever caught, or are required by regulation to retain but not sell."

National Standard 9 of the MSA requires that "conservation and management measures shall, to the extent practicable, (A) minimize bycatch and (B) to the extent bycatch cannot be avoided, minimize the mortality of such bycatch" (16 U.S.C. § 1851(9)). Sec. 303 of the MSA expands on this requirement somewhat, stating that fishery management plans are required to "establish a standardized reporting methodology to assess the amount and type of bycatch occurring in the fishery, and include conservation and management measures that, to the extent practicable and in the following priority (A) minimize bycatch; and (B) minimize the mortality of bycatch which cannot be avoided" (16 U.S.C. § 1853(11)).

NMFS regulations at 50 CFR 600.350(d)(3) provide the following guidance on factors that should be considered in determining the practicability of a particular management action to minimize bycatch or the mortality of bycatch. They state, "A determination of whether a conservation or management measure minimizes bycatch or bycatch mortality to the extent practicable, consistent with other national standards and maximization of net benefits to the Nation, should consider the following factors: (A) Population effects for bycatch species; (B) Ecological effects due to changes in the bycatch of that species (effects on other species in the ecosystem); (C) Changes in the bycatch of other species of fish and the resulting population and ecosystem effects; (D) Effects on marine mammals and birds; (E) Changes in fishing, processing, disposal, and marketing costs; (F) Changes in fishing practices and behavior of fishermen; (G)

Changes in research, administration, and enforcement costs and management effectiveness; (H) Changes in the economic, social, or cultural value of fishing activities and non-consumptive uses of fishery resources; (I) Changes in the distribution of benefits and costs; and (J) Social effects."

Although the MSA excludes fish released alive under a recreational catch and release fishery management program, from its definition of bycatch, Section 303(a)(12) of the MSA, states that any fishery management plan shall "assess the type and amount of fish caught and released alive during recreational fishing under catch and release fishery management programs and the mortality of such fish, and include conservation and management measures that, to the extent practicable, minimize mortality and ensure survival of such fish." Therefore, for purposes of this report, bycatch will be defined more broadly over both commercial and recreational fisheries. However, the distinction between commercial and recreational bycatch will be addressed when developing mechanisms and strategies for monitoring bycatch.

2.2 Endangered Species Act

The ESA requires the federal government to protect and conserve species and populations that are endangered, or threatened with extinction, and to conserve the ecosystems on which these species depend. Some of these threatened and endangered species, including certain species of sea turtles, Pacific salmon, seabirds and marine mammals, are captured as bycatch in the Nation's fisheries. Under the ESA's protection process, after a species is identified as threatened or endangered, a recovery plan that outlines actions to improve the species' status is prepared and implemented. Recovery plans for marine species generally include a prescription for reducing incidental capture of protected species in commercial fishing operations. In some cases, fisheries can be restricted or terminated because they impose mortality rates on protected species that impede the recovery of the listed population. Other provisions of the ESA ensure that sources of mortality for protected species are identified and minimized or mitigated.

The bycatch reduction requirements of the ESA follow from Section 9(a)(1)(B) and 9(a)(1)(C) of the ESA, which prohibit the take of endangered species within the United States or the territorial sea of the United States, and on the high seas, respectively. "Take" is defined by the ESA as "to harass, harm, pursue, hunt, shoot, wound, kill, trap, capture, or collect, or attempt to engage in any such conduct" (16 U.S.C. 1536(18)). ESA Sections 4, 6, 7 and 10 provide mechanisms for the limited take of ESA-listed species. Of particular relevance for fisheries bycatch is Section 7, which provides that "Each Federal agency shall ... insure that any action authorized, funded, or carried out by such agency ... is not likely to jeopardize the continued existence of any endangered species or threatened species or result in the destruction or adverse modification of habitat of such species ..." (16 U.S.C. §1536(a)(2)).

Both NMFS and the U.S. Fish and Wildlife Service develop Biological Opinions pursuant to a formal consultation under Section 7 of the ESA to assess the impact of proposed activities on species under their respective jurisdictions. If the resulting Biological Opinion finds that the proposed activity is likely to result in jeopardy to the species or adverse modification of its habitat, the Biological Opinion will outline Reasonable and Prudent Alternatives (RPAs) that must be taken to ensure that the species is not jeopardized. If the Biological Opinion finds that the proposed activity is likely to result in bycatch of an endangered species, then an Incidental Take Statement is issued that specifies the impact of any incidental taking, as well as RPAs, and

terms and conditions to implement the measures, necessary to minimize such impacts. Commercial fisheries that result in bycatch of listed sea turtles, for example, would be required to implement the relevant RPAs as applicable to protect sea turtles from fishing gear.

2.3 Marine Mammal Protection Act

The MMPA seeks to maintain marine mammal stocks at optimum sustainable population levels, principally by regulating the human induced mortality and serious injury of marine mammals. This includes fishing-related mortality and serious injury.

Although the MMPA prohibits the "take" of marine mammals, it provides exceptions for incidental mortality and serious injury in the process of commercial fishing activities as well as a limited number of other activities. "Take" is defined in the MMPA as, "to harass, hunt, capture, or kill, or attempt to harass, hunt, capture, or kill any marine mammal" (16 U.S.C. § 1362 (13)). In 1994, Congress amended the MMPA to include Section 118, which established a regime to regulate the take of marine mammals incidental to commercial fishing so that it does not occur at a level that jeopardizes a marine mammal stock's ability to reach its "optimum sustainable population", defined as "the number of animals which will result in the maximum productivity of the population or the species, keeping in mind the carrying capacity of the habitat and the health of the ecosystem of which they form a constituent element" (16 U.S.C. § 1362(9)).

Section 118 of the MMPA requires that NMFS classify each U.S. fishery according to whether there is a frequent (Category I), occasional (Category II), or remote (Category III) likelihood of incidental mortality and serious injury of marine mammals. It also requires the establishment of take reduction teams to develop take reduction plans (TRPs) for those fisheries with the greatest impact on marine mammal stocks (Category I and Category II).

The MMPA establishes both a short-term (6-month) and a long-term (5-year) goal for marine mammal bycatch reduction. TRPs are required to reduce, within 6 months of implementation, the incidental mortality or serious injury of marine mammals incidentally taken in the course of commercial fishing operations to levels less than a stock's potential biological removal[3] (PBR) level. Within five years of implementation, TRPs are required to reduce the mortality or serious injury of marine mammals incidentally taken in the course of commercial fishing operations to insignificant levels approaching a zero mortality and serious injury rate, taking into account the economics of the fishery, the availability of existing technology, and existing state or regional fishery management plans (16 U.S.C. § 1387(f)).

---

[3] The term "potential biological removal level" means the maximum number of animals, not including natural mortalities, that may be removed from a marine mammal stock while allowing that stock to reach or maintain its optimum sustainable population. The potential biological removal level is the product of the following factors: (A) The minimum population estimate of the stock; (B) One-half the maximum theoretical or estimated net productivity rate of the stock at a small population size; and (C) A recovery factor of between 0.1 and 1.0. (16 U.S.C. 1362(20)).

Participants in Category I or II fisheries are required to register with NMFS, take on board an observer if requested by NMFS to do so, and comply with all applicable TRP regulations. All fishermen, including those participating in Category III fisheries, are required to report the incidental mortality and serious injury of marine mammals should it occur.

2.4 FAO Code of Conduct for Responsible Fisheries

More than 170 Members of the Food and Agriculture Organization of the United Nations (FAO) adopted the Code of Conduct for Responsible Fisheries in 1995. The Code is voluntary and aimed at everyone working in and involved with fisheries and aquaculture, irrespective of whether they are located in inland areas or in the oceans. The Code of Conduct, which consists of a collection of principles, goals, and elements for action, took more than two years to develop. Among other things, the Code of Conduct maintains that fishing methods and gear should be selective and designed to minimize waste and promote high survival rates for escaping fish. Gear should also minimize the catch of fish species that are not wanted (non-target or bycatch fish) or that are endangered. Fishing gear and fishing methods that are not selective or that cause high levels of waste should be phased out, according to the Code of Conduct. NMFS has been very active in promoting the implementation of the FAO's International Plan of Action (IPOA) for Reducing Incidental Catch of Seabirds in Longline Fisheries and the FAO IPOA for the Conservation and Management of Sharks, both of which have grown out of the Code of Conduct. More information on the IPOAs can be found at the following website: http://www.nmfs.noaa.gov/sfa/international/index.htm

3. Regional Characteristics of Bycatch

3.1 Southwest Region

Fisheries of particular importance to the Southwest Region include coastal pelagic species fisheries, the drift gillnet fishery for swordfish, and the fisheries for highly migratory species, including the U.S. purse seine fleet that operates in the eastern Pacific Ocean.

The coastal pelagic species (CPS) fishery targets northern anchovy, jack mackerel, Pacific sardine, and Pacific mackerel. CPS vessels fish with encircling nets, targeting a specific school, and the most common incidental catch in the CPS fishery are other CPS species. A few measures have been proposed to minimize bycatch (e.g., the use of grates to cover openings of holds through which fish are pumped). In California, limited amounts of information are available from at-sea observations; the bulk of bycatch data is derived from port sampling. When the sardine fishery was initiated off Washington and Oregon, the states implemented observer programs specifically to assess bycatch. The precision and accuracy of these data have not been assessed; however, the reported levels of bycatch support the view that bycatch of vulnerable species is not significant. For example, the bycatch of salmon observed in the Washington and Oregon sardine fishery in 2002 amounted to 1,800 fish. The landed catch of chinook and coho salmon in the 2002 ocean salmon fisheries exceeded 400,000 fish off Washington and Oregon. Based on sampling of landed catch in these areas, a small (but unknown) percentage of the salmon taken in the CPS fishery are likely from ESA-listed Evolutionary Significant Units. No specific measures are deemed necessary at this time to reduce or mitigate these takes.

The California/Oregon Drift Gillnet (DGN) fishery targets swordfish and thresher shark. It had been classified as a Category I fishery under the MMPA as a result of interactions with marine mammals, some of which are listed under the ESA, but was reclassified as Category II in 2003 due to successful bycatch reduction efforts. Since 1980, with the exception of a few years, the California Department of Fish and Game and NMFS have conducted an observer program to collect data on the bycatch of protected species. The DGN fishery was the subject of the Pacific Offshore Cetacean Take Reduction Plan, implemented in 1997 to address incidental takes of beaked whales, pilot whales, pygmy sperm whales, sperm whales, and humpback whales in the DGN fishery. The Take Reduction Plan, which required the use of pingers, 36 feet net extenders, and mandatory skipper education workshops, reduced marine mammal entanglements by an order of magnitude in its first two years of implementation.

In 2000, NMFS conducted an internal ESA Section 7 consultation on the DGN fishery and evaluated the incidental take of listed sea turtles and marine mammals by the DGN fishery. The opinion found the incidental take was likely to jeopardize the continued existence of certain populations and specified a reasonable and prudent alternative under which the fishery could operate. NMFS authorized the take of nine leatherback turtles in three years, and similarly low numbers of loggerhead turtles, and implemented fishery time-area closures under ESA regulations to ensure these levels were not exceeded. NMFS determined that the DGN fishery, operating under the Take Reduction Plan, will have a negligible effect on listed marine mammals in 2000.

As with most pelagic gillnet fisheries, the catch of non-target species in the DGN fishery is high (non-target catch includes common mola, blue shark, skipjack and mackerel). Eighty percent of the molas are released alive and the majority of the tuna is landed.

The U.S. policy regarding the bycatch of marine mammals was in large part defined by the purse seine fishery for tuna in the Eastern Tropical Pacific Ocean (ETP). In the 1960s, the practice of setting nets around dolphins to harvest tuna swimming below was developed in the ETP. From 1970 to 1980, the purse seine fishery expanded, dominated by the U.S. fleet. Annual dolphin mortality exceeded 350,000 animals. In 1972, Congress ratified the MMPA, primarily due to the public reaction to the high levels of dolphin mortality associated with the ETP tuna fishery. During the 1980s, a progressive relocation of the U.S. fleet to the central western Pacific occurred as a result of conflicts in the tuna fishery between the United States and Latin America nations, the 1982/83 El Niño event, and limits imposed through the MMPA on the incidental kill of dolphins in the ETP. In 1980, the U.S. fleet consisted of 126 seiners, 25 bait boats and 4 jig boats with a combined carrying capacity of 118,000 metric tons (t). By 1994, only 4 U.S. flag seiners were active in the ETP with a combined carrying capacity of less than 6,000 t.

Mexico and Ecuador are now the dominant participants in the fishery. A small number of large U.S. purse seine vessels (greater than 400 short tons carrying capacity) continue to fish the ETP under jurisdiction of the Inter-American Tropical Tuna Commission (IATTC) and governed by the Agreement on the International Dolphin Conservation Program. In 2001, 5 large U.S. tuna purse seine vessels participated in the fishery out of a total of 140 vessels. The IATTC reports annual estimates of finfish and dolphin mortality by species and stock, as well as standard errors associated with the estimates for all vessels classes. No U.S. vessels currently set on dolphins. All large U.S. vessels carry observers while fishing, and the accuracy and precision of bycatch estimates are accordingly high. While U.S. participation in the fishery has all but disappeared, the bycatch of dolphins in the ETP tuna fishery remains a controversial issue (e.g., the recent redefinition of the "Dolphin Safe" designation). NMFS continues its efforts, through its support of the IATTC and international agreements, to reduce bycatch by U.S. and foreign flag vessels.

The Pacific Fishery Management Council's Fishery Management Plan for U.S. West Coast Fisheries for Highly Migratory Species (HMS FMP) was approved in February 2004. The HMS FMP establishes a framework for the management of fisheries for tuna, swordfish, and selected sharks by West Coast vessels and institutes initial conservation and management measures for drift gillnet and longline fisheries. The drift gillnet measures essentially continue the measures in place under other authorities (i.e., MMPA, ESA) to prevent and/or mitigate marine mammal and sea turtle takes in the fishery. These measures include gear (e.g., pingers) and time/area fishery closures that have proven to be very effective. The longline measures are new and prohibit shallow longline sets by West Coast vessels west of 150° W. longitude to prevent sea turtle interactions. A companion measure under the ESA prohibits longline targeting of swordfish east of 150° W. longitude, also to prevent sea turtle interactions. The HMS FMP also establishes a catch-and-release program in recreational fisheries to promote prompt release of fish in a manner that will promote survival of the fish. Further, the FMP requires that NMFS develop observer sampling plans and take other measures to ensure accurate and statistically reliable estimates of bycatch and protected species interactions. NMFS is initiating baseline observer coverage of coastal purse seine and troll albacore fisheries in 2004 as part of this effort. Observer placements on charter vessels also will be evaluated. Finally, the Southwest Region is working with the U.S. Fish and Wildlife Service to ensure development and distribution of

placards and other information describing how to deal with any incidental hookings of seabirds (especially brown pelicans) in recreational fisheries for highly migratory species.

3.2 Southeast Region

Southeast fisheries (North Carolina to Texas and the U.S. Caribbean) generate about one billion dollars in ex-vessel gross revenues per year (NMFS 2001). Fisheries of the Southeast reflect the very diverse fauna of the region, with relatively few large fisheries and many small fisheries. The fisheries have catches from more than 200 stocks of fish and fishery resources.

Two fisheries dominate economically. The menhaden purse seine fishery is the volume leader in the Southeast, with annual landings approaching 2 million t. About 60% of the landings come from the Gulf of Mexico and 40% from the Atlantic. The shrimp trawl fishery generates the largest revenue regionally, and sometimes nationally. The Gulf of Mexico shrimp fishery accounts for about 75% of the entire U.S. wild shrimp production. About half the commercial value of fisheries other than shrimp and menhaden consists of shellfish fisheries (blue crabs, oysters, and other invertebrates), generally harvested from state waters, and managed by the states. The remainder of the commercial harvest consists of finfish from many stocks, including reef fish (red snapper, red grouper, etc.); coastal pelagics (e.g., king and Spanish mackerel), and oceanic pelagics (sharks, swordfish, and tunas).

Marine recreational fishing is a very important part of the Southeast harvest. Typically, 4-6 million participants make 30-40 million trips annually. The magnitude of recreational participation in the Southeast is much larger than in other regions of the United States. The bulk of recreational harvest consists of small fish from the drum family (croakers and seatrouts), but many of the prized commercial species are also prized by recreational fishermen (e.g., red snapper and other reef species, and king and Spanish mackerel). This shared usage makes every conservation issue an allocation issue as well.

Partnerships with other fishery management agencies (e.g., state fishery management agencies, interstate marine fisheries commissions, state Sea Grant College programs, and the Gulf and South Atlantic Fishery Development Foundation) have been crucial to addressing bycatch issues in the Southeast Region. Efforts in this region pre-date many of the regional and national workshops held in other areas of the country.

The Southeast formally began to address finfish bycatch in the shrimp trawl fishery in 1990 and developed a strategic research document focusing on this important issue. Previously, gear research had focused on excluding sea turtles from trawls through the development of turtle excluder devices (TEDs). Initially, this research effort lead to the development of several dozen TEDs that were approved for use in the fishery. However, in recent years the number of approved TEDS has been reduced, and only a few larger-opening TEDs are now approved for use in the fishery. The bycatch strategic document led to implementation of a formal Regional Research Program, coordinated by the Gulf and South Atlantic Fishery Development Foundation. The major components of the program were observer programs to quantify bycatch mortality, and gear technology research and development to reduce finfish bycatch. A four-phase development program for bycatch reduction devices (BRDs) for shrimp trawls was successfully used under the Regional Research Program structure to develop several BRD designs that are used in the fishery.

Establishing and maintaining the distinction among these four phases proved surprisingly useful, both to the orderly progression of candidate gear through the development program, and to communicating the nature of different types of data and research. Within this framework, actual research and development of candidate devices have been carried out independently by NMFS, Sea Grant, state agencies, universities, and industry, drawing on a variety of funding sources, primarily the Saltonstall-Kennedy (S-K) and Marine Fisheries Initiative (MARFIN) grants programs.

Bycatch characterization and reduction research has been conducted for other fisheries in the Southeast, but not through a formal cooperative program structure as for shrimp. Longline fisheries for tuna, swordfish, and sharks have a history of observer programs for general characterization of the fisheries, including bycatch.

The observer coverage of the pelagic longline fishery, which targets swordfish and tuna species, is monitored by the NMFS Highly Migratory Species (HMS) Management Division and the Southeast Fisheries Science Center. A mandatory observer program has been in place since 1992, at which time there were approximately 350 active vessels. There are currently between 130 and 150 vessels actively participating in the fishery, and they work out of ports that range along the Atlantic coast from Portland, Maine to Key West, Florida, along the Gulf from Key West to Brownsville, Texas, and from Puerto Rico to 5° N. latitude.

The program has always had a target coverage level of 5% of the U.S. fleet within 11 geographical areas of the North Atlantic Ocean (Atlantic waters north of 5° N. latitude), as was agreed to by the United States at the International Commission for the Conservation of Atlantic Tunas (ICCAT). Starting in 2002, the program began requiring an 8% coverage rate. Actual coverage levels achieved from 1992-2002 have ranged from 2% to 6% depending on quarter and year. Data collection priorities have remained the same since the inception of the program. The primary goal of the program is to collect catch and effort data of the U.S. pelagic longline fleet on highly migratory fish species, although information is also collected on bycatch of protected species (marine mammals, sea turtles and seabirds).

NMFS, in cooperation with the U.S. pelagic longline fishery, implemented a three-year research program in the western Atlantic Ocean to develop and evaluate sea turtle mitigation measures. Five potential mitigation techniques were evaluated during 687 research sets in 2001 and 2002. Data were collected to evaluate the effectiveness of the mitigation measures and to investigate variables that affect sea turtle interaction rates with pelagic longline gear. A significant reduction in loggerhead catch may be achieved by reducing daylight soak time. The use of 18/0 circle hooks and mackerel bait was found to significantly reduce both loggerhead and leatherback sea turtle interactions when compared with industry standard J hooks and squid bait. Also, circle hooks significantly reduced the rate of hook ingestion by the loggerheads, reducing the post-hooking mortality associated with the interactions. The combination of 18/0 circle hooks and mackerel bait was found to be the most efficient mitigation measure for both loggerhead and leatherback turtles. Mackerel bait was found to be more efficient for swordfish than squid bait and circle hooks were more efficient for tuna than J hooks.

The directed shark gillnet fishery that developed off the east coast of Florida and Georgia in the late 1980s is classified as a Category II fishery under the MMPA because of occasional marine mammal takes. There is also a concern about interaction with protected sea turtles.

Vessels operating in the fishery are typically from 12.2-19.8 m in length. The nets used (both nylon multi-filament and monofilament) are from 275-1,800 m long and 3.2-4.1 m deep, with stretched mesh from 12.7-29.9 cm. The most common type of net is a drift gillnet, wherein the vessel basically sets a gillnet in a straight line off the stern. The net soaks or fishes at the surface for a period of time, is inspected at various occasions during the soak, and then hauled onto the vessel when the captain/crew feel the catch is adequate. It is usually a nighttime fishery and takes place between 3 and 9 nautical miles from shore. The other type of gear utilized is strike-netting, wherein the vessel uses a gillnet to encircle a school of sharks. This is usually done during daylight hours, using visual sighting of shark schools from the vessel and/or a spotter plane. The gear is set around the sharks, and is hauled back onto the vessel without much soak time. Between 5 and 11 vessels operated in this fishery from 1993-98. Currently, between four and six are operating. An observer program for this fishery has been in place from 1993-1995 and 1998-2002. The objectives of this program are to obtain estimates of catch and bycatch and bycatch mortality rates of protected species (sea turtles and marine mammals), juvenile sharks, and other fish species in the Southeast Region's U.S. coastal shark gillnet fishery. Catch and bycatch estimates are gathered to meet the mandates of the Atlantic Large Whale Take Reduction Plan and the Biological Opinion issued under requirements of the Fishery Management Plan for Highly Migratory Species.

NMFS's Southeast Region convened a Bottlenose Dolphin Take Reduction Team (BDTRT) in 2001 to address incidental mortality and serious injury of coastal Atlantic bottlenose dolphins in gillnet, seine, trap/pot, and stop net fisheries along the Atlantic coast. NMFS currently is readying a BDTRT plan proposed rule for public comment. The plan includes measures to reduce bottlenose dolphin bycatch to levels below the stock's PBR within six months of its implementation.

MARFIN and S-K grants have also funded research on bycatch in the menhaden purse-seine fisheries of the Gulf and Atlantic coasts. The menhaden industry has already developed some gear innovations to release bycatch alive during harvest.

Estimates of fish caught, but not retained, in recreational fisheries are made through the National Marine Recreational Fisheries Statistics Survey (MRFSS) program for much of the Southeast Region. There have been S-K awards for short-duration projects assessing recreational bycatch in some geographic areas not covered by MRFSS. A number of MARFIN and S-K grants have been awarded to examine mortality of hooked and released fish. Species addressed include red snapper, red grouper, king and Spanish mackerel, and sharks. Short-duration observer programs have been conducted in some areas in the Gulf of Mexico to examine bycatch of the commercial hook-and-line fishery for reef fish. Short-term research has been conducted on bycatch in trap fisheries for finfish and crustaceans, with most projects focused on developing escape structures for unwanted or prohibited catch, and for reduction of ghost fishing by lost traps.

Evaluations of impacts of bycatch on the fish stocks, and thus on directed fisheries, are made through traditional stock assessments whenever estimates of bycatch are available. Evaluations of the effects of bycatch in the shrimp fisheries are the most advanced. Incorporation of bycatch information from other fisheries in stock assessments is often less adequate due to the lack of time series estimates for bycatch.

3.3 Northwest Region

Fisheries of the West Coast (coastal California, Washington and Oregon) target several species of groundfish and salmon, while anchovy, sardines, mackerel, shrimp, crab, squid, and other shellfish and molluscs provide other important fishing opportunities. These fisheries are harvested using a variety of gear types (e.g., trawls, seines, pots, hook and line) that produced about 338,000 t during 2002, and had an ex-vessel value of approximately $229 million (PacFIN 2003).

Pacific hake (whiting), the largest proportion of groundfish landed on the West Coast, are taken by large mid-water trawl and catcher/processor vessels that have replaced the foreign and joint-venture fleets of the 1970s and 1980s. The At-Sea Hake Observer Program has provided information on the bycatch of other groundfish species and salmon in the at-sea hake fishery since the early 1990s. The shoreside hake fishery is sampled by programs run by each state. Further, a project to deploy electronic monitoring systems on the entire shoreside hake fleet for the 2004 season was a success and the analysis of the data will be available by late 2004. Some species of rockfish, such as yellowtail rockfish and Pacific ocean perch, are occasionally taken as bycatch in large numbers but are accounted for by the monitoring programs. Marine mammal bycatch in the at-sea Pacific hake midwater trawl fishery is also monitored by the At-Sea Hake Observer Program. Since 1990, limited mortality takes have included individuals from six marine mammal species, specifically, California sea lion, Steller sea lion, harbor seal, northern elephant seal, Pacific white-sided dolphin, and Dall's porpoise. During the 2002 fishing season, observers reported three marine mammal mortalities, a level that is not considered significant.

The bottom trawl fishery targets individual rockfish, flatfish, roundfish species, and different species complexes of rockfish, as well as the deep-water complex consisting of thornyheads, rockfish, Dover sole, and sablefish. Fish caught are brought back to shoreside plants for processing. Vessels discard groundfish at sea for many reasons, such as to comply with regulatory constraints and because a portion of the catch is economically undesirable. In the past, information on bycatch has been derived from a variety of sources, primarily research studies or other short-term programs that sampled at-sea discards on only a small portion of the bottom trawl fleet. However, the West Coast Groundfish Observer Program (WCGOP) began collecting at-sea data on groundfish bottom trawlers in August 2001 and aids in monitoring the total removals by the fishery, which is an important component of any fishery analysis program. In the bottom trawl fishery, total landed catch is monitored by the state-run fish sales ticket system.

The primary economic objective for groundfish management on the West Coast is to have seafood processors provide a continuous, year-round flow of fish to fresh fish markets to produce a variety of benefits, including continuous employment in coastal communities. However, overcapitalization, increased effort, and either declining or stable total allowable catch have resulted in the need to significantly slow catch rates to spread the catch of each species or species complex for which there is a specified optimum yield (OY) over the entire year.

The Pacific Fishery Management Council has chosen trip landing limits as the vehicle to slow the catch rates. Because almost all species managed by trip limits are harvested in a multispecies mixture with other trip-limit species, vessels are forced to discard species once the trip limit for that species is reached, while the vessel continues to fish for other species until

those trip limits are met. As trip limits become more restrictive and as more species come under trip-limit management, regulatory discards increase. Most species are managed under two-month cumulative trip-landing limits.

Trip limit-induced discards also can occur when fishermen continue to harvest other species when the OY of a single species is reached and further landings of that species are prohibited. Discretionary discards of unmarketable species or sizes were known to occur widely in the bottom trawl fishery and were largely unmeasured until the establishment of the WCGOP.

The other major West Coast bottom trawl fishery is the shrimp trawl fishery. Bycatch discards in the shrimp trawl fishery are known to include groundfish species, Pacific halibut, chinook salmon, and squid. Although the amount of groundfish bycatch in the shrimp trawl fishery is unknown because of the lack of an at-sea sampling program, its existence is recognized. Over the past several years, S-K grant funds were used to develop and test finfish excluder devices for the shrimp trawl fishery. This fishery is state-managed and all three West Coast states now require fishery participants to use finfish excluder devices.

Other groundfish fisheries include bottom longline and pot (fish trap) fisheries for sablefish, other line (vertical longline, etc.) fisheries for rockfish and bottom gill nets for rockfish. Very little is known about the amount of discard and discard mortality in these fisheries. Similarly, we have little information on the biological and socio-economic effects of bycatch and discards in these fisheries. The WCGOP is currently observing commercial fixed gear vessels to aid in assessing their biological impact.

The five species of Pacific salmon support important commercial, recreational, and tribal fisheries in the states of Washington, Oregon, California, and Idaho. Commercial, recreational, and tribal fishermen harvest salmon from the Pacific Ocean, Puget Sound, estuaries, and rivers along spawning migration routes using trolling gear, seines, gill nets, and hook and line. Harvests have been declining as habitat degradation and overfishing have threatened specific populations of salmon. Several species of salmon have been or are proposed for listing under the Endangered Species Act. The federally managed ocean salmon fisheries are divided into commercial troll and recreational fisheries. Both groups use hook-and-line gear. Inside-water commercial fisheries, which are managed by the states and treaty tribes, use gill nets and purse seines. Bycatch in the ocean commercial troll and recreational salmon fisheries has two major components. The first is the catch and discard of depressed or endangered salmon species, for which there is no total allowable catch in a mixed-stock fishery with other salmon species. The second is the catch and discard of salmon species either coastwide or by management area, where the quota for one species of salmon is taken before the quota for the other species.

Recreational angling is important to the West Coast fisheries; anglers reportedly spend about $850 million each year in the West Coast fisheries. Recreational fisheries include those for salmon, Pacific halibut and groundfish species. West Coast recreational salmon catch was over 610,000 fish in 2002 (RecFIN 2003) and total Pacific halibut sport quota is set at 224.3 t (IPHC 2003) for 2003. The bycatch and discard rates in these fisheries have not been thoroughly assessed, but are significant for some species such as lingcod and most nearshore groundfish species. Discard of these species is primarily due to regulatory size and bag limits. Anglers also preferentially retain trophy fish and specific species of fish while discarding other less desirable fish. Limited monitoring data are collected by the states in these fisheries.

3.4 Alaska Region

Alaska fisheries are diverse with respect to the species sought, the gear types employed and the sizes of both harvesting and processing operations. They target Pacific halibut, Pacific herring and several species of groundfish, Pacific salmon, crab, and other shellfish. Since 1985, the annual ex-vessel revenue for the commercial fisheries approached or exceeded $1 billion (Hiatt et al. 2003). The recreational and subsistence fisheries are important parts of the Alaska fisheries for some species and regions.

There is an FMP for each of the following five fisheries off Alaska: the Bering Sea/Aleutian Islands area (BSAI) groundfish fishery, the Gulf of Alaska (GOA) groundfish fishery, the BSAI king and Tanner crab fishery, the scallop fishery, and the salmon troll fishery in the Exclusive Economic Zone (EEZ) off Southeast Alaska. In addition, the Pacific halibut fishery off Alaska is managed under federal regulations, and NMFS is responsible for monitoring the incidental mortality and serious injury of marine mammals in state-managed fisheries under the MMPA. This section focuses on the bycatch of all living marine resources in the BSAI and GOA groundfish fisheries and the halibut fishery and on the bycatch of marine mammals in the state-managed Category II fisheries (there are no Category I fisheries in Alaska). There are two reasons for this focus. First, the FMPs for the crab, scallop and EEZ salmon fisheries defer most management authority, including basically all bycatch monitoring and management authority, to the State of Alaska. Second, with respect to the state managed Category II fisheries, the management responsibilities and authorities of NMFS are limited principally to marine mammals. In those fisheries, monitoring and controlling the bycatch of other living marine resources is principally a stewardship responsibility of the State of Alaska or the U.S. Fish and Wildlife Service (USFWS).

A variety of factors contribute to the bycatch problems both in the Alaska groundfish and halibut fisheries and the state-managed MMPA Category II fisheries and make them more difficult to solve. These factors include: (1) the multi-species nature of the bycatch problem; (2) limited information concerning the biological, ecological, social, and economic effects of alternative methods for reducing bycatch; (3) substantial excess harvesting capacity; (4) with few exceptions, the use of the race for fish to allocate quotas among competing fishing operations; and (5) the external benefits and costs associated with bycatch.

3.4.1 Groundfish Fisheries

In the 1980s, joint-venture and domestic fisheries rapidly replaced the foreign fisheries that had accounted for more than 90% of the Alaska groundfish catch; and then the domestic fisheries displaced the joint-venture fisheries. In joint-venture fisheries, domestic fishing vessels delivered groundfish catch directly to foreign processing vessels on the fishing grounds. The last foreign and joint-venture groundfish fisheries in the EEZ off Alaska occurred in 1986 and 1990, respectively.

Groundfish stocks (which include walleye pollock, Pacific cod, sablefish, rockfish, flatfish, and Atka mackerel) generally are in a healthy condition. All Alaska groundfish stocks have fluctuated in abundance over the years, but no widespread trend toward decline is evident. No stocks are overfished, and overfishing is not occurring. This is in part the result of efforts to

set conservative quotas and to prevent them from being exceeded. For example, in 2002 the total harvest of Alaska groundfish species (2.10 million t) was only about 59% of the acceptable biological catch (ABC) (3.58 million t) and was about 94% of the total allowable catch (2.24 million t). The BSAI and GOA groundfish OY caps established in the FMPs explain, in part, why groundfish harvest has been substantially less than the aggregate ABCs.

In 2002, the retained catch of 1.96 million t resulted in ex-vessel gross revenues of about $570 million and $1.5 billion in gross revenues for seafood processors. Trawl, hook and line (including longline and jig gear), and pot gear account for virtually all the catch in the BSAI and GOA groundfish fisheries. The selectivity of each gear type in the multi-species groundfish fisheries varies by gear configuration, target species, area, and time of year. In recent years, trawl fisheries on average accounted for about 90% of the total groundfish catch; however for some species, such as Pacific cod and sablefish, substantially more than 50% of the catch is taken with fixed gear (principally longline gear). There are catcher vessels and catcher/processor vessels in the trawl, longline and pot fisheries. In 2002, vessels less than 60 feet in length accounted for about 2% of the total retained groundfish catch, larger catcher vessels took about 45% of the total, and catcher/processors took about 53% of the total. The distribution of catch by gear and type of fishing vessel is, in part, due to allocations in the groundfish FMPs.

The bycatch of the non-groundfish species, such as crab, salmon, halibut, and herring, and of marine mammals, has been an important management issue that NMFS has monitored since before the Fishery Conservation and Management Act of 1976. More recently, the discards of groundfish, including the major and minor groundfish species, and the bycatch of seabirds (including the endangered short-tailed albatross) have become important management issues. The North Pacific Fishery Management Council (NPFMC) has recommended and NMFS has implemented a broad range of management measures that were designed at least in part to monitor and reduce bycatch in the groundfish fishery. The management measures include a large observer program, groundfish quotas that are set and monitored in terms of total catch, time and area closures, gear restrictions, gear allocations, full retention requirements for pollock and Pacific cod, prohibitions on the retention of some non-groundfish species, bycatch limits for some non-groundfish species, reduced quotas for some groundfish species, careful release requirements for halibut bycatch in the longline fisheries, bird bycatch avoidance regulations for the longline fisheries, fishery closures when groundfish or non-groundfish quotas are taken, individual fishing quotas for the fixed gear sablefish and halibut fisheries, and the American Fisheries Act allocations and cooperatives for the BSAI pollock fishery. Although changes in bycatch are due to a variety of factors, the following comparisons of catch and bycatch estimates for 1996 and 2002 for the BSAI and GOA groundfish fisheries provide an indication of the success of the bycatch reduction measures. Although total groundfish catch increased by 2.5%, groundfish discards decreased by 50%, the discard rate for groundfish decreased to 6.8%, halibut bycatch mortality decreased by 8%, herring bycatch decreased by 91%, salmon bycatch decreased by 15%, and crab bycatch decreased by 52%. Although the bycatch rates in the Alaska groundfish fishery are relatively low compared to most other major fisheries in the U.S. or elsewhere, the absolute levels of bycatch are high due to the size of the groundfish fishery. In 2002, bycatch (i.e., discards) in the groundfish fisheries included about 142,000 t of groundfish, 6,100 t of halibut mortality, 137,000 (individual) salmon, 133 t of herring, and almost 3 million (individual) crab (mostly snow and Tanner crab).

Data provided by the Alaska Fisheries Science Center's (AFSC) North Pacific Groundfish Observer Program (NPGOP) are a critical element in the conservation and

management of groundfish, other living marine resources, and habitat. For example, these data are used for: (1) assessing the status of groundfish stocks; (2) setting groundfish quotas and monitoring them for in-season management; (3) monitoring the bycatch of non-groundfish species for in-season management; (4) assessing the effects of the groundfish fishery on other living marine resources and their habitat; and (5) assessing methods for improving the conservation and management of groundfish, other living marine resources and habitat. The NPGOP also provides the industry with bycatch data it needs to make timely fishing decisions that decrease bycatch and increase productivity. In addition, the NPGOP has resulted in fundamental changes in the nature of the bycatch problem. First, by providing good estimates of total groundfish catch and non-groundfish bycatch by species, it eliminated much of the concern that total fishing mortality was being underestimated due to fish that were discarded at sea. Second, the NPGOP made it possible to establish, monitor and enforce the groundfish quotas in terms of total catch as opposed to only retained catch. For the groundfish fisheries, this means that both retained catch and discarded catch are counted against the total allowable catches (TACs). Third, the NPGOP made it possible to implement and enforce bycatch quotas for the non-groundfish species that by regulation had to be discarded at sea. Finally, it provided extensive information that managers and the industry could use to assess methods to reduce bycatch and bycatch mortality. In summary, the observer program generally provided fishery managers with the information and tools necessary to prevent bycatch from adversely affecting the stocks of the bycatch species. Therefore, the bycatch in the groundfish fishery is principally not a conservation problem, but it can be an allocation problem. Although this does not make it less controversial, it does help identify the types of information and management measures that are required to address the bycatch problem.

In 2002, there were approximately 35,000 observer deployment days, including over 30,000 deployment days on catcher vessels, catcher/processors and motherships. The fishing and processing operations paid more than $12 million to observer providers for those 35,000 observer deployment days. Vessels with observers onboard accounted for about 86% of the total groundfish catch in the BSAI and about 33% of the total in the GOA. However, for some areas and gear types, vessels of less than 60 feet account for most or all of the catch, and there are no observer data for those vessels. Three other concerns with respect to the quality or availability of observer data are: (1) the lack of random placement of observers on vessels that are required to have observers less than 100% of their fishing days; (2) the ability of the observers to provide accurate bycatch estimates for species either for which bycatch is a very rare occurrence or for which species identification is very difficult; and (3) the observer effect bias. An observer effect bias exists either if fishing practices change for trips or hauls (i.e., sets) that are observed or if crew members take actions to prevent accurate catch or bycatch estimates for observed hauls.

In addition to the management measures that have been implemented to reduce bycatch, gear technology research and research on the behavioral responses of fish both to fishing gear and to the stresses imposed by coming in contact with fishing gear have contributed substantially to addressing bycatch. Species-specific differences in the response to fishing gear have been identified and used to develop gear modifications that increase the escapement of juvenile fish and other fish that would be discarded if they did not escape. Much of this research has been conducted by NMFS in cooperation with the industry and universities.

3.4.2 Pacific Halibut Fisheries

Commercial, recreational and subsistence fisheries exist for Pacific halibut off Alaska. Although the vast majority of the commercial catch is taken with longline gear, halibut is also taken with other types of hook and line gear. The International Pacific Halibut Commission (IPHC) has the primary responsibility for managing the halibut resource off Alaska. Under authority of the North Pacific Halibut Act, NMFS is authorized to develop regulations that are in addition to, but not in conflict with, regulations adopted by the IPHC. The NPFMC developed an individual fishing quota (IFQ) program for the commercial Alaska halibut fishery in 1992. NMFS implemented the program in 1995. Under the IFQ program, individual fishermen were assigned a quota share based on past participation in the fishery and other criteria developed by the NPFMC. The annual halibut quota established by the IPHC is allocated among fishermen based on their individual quota shares. These quota shares are transferable harvest privileges within specified limitations. Under the IFQ program, fishermen are able to harvest their halibut IFQ whenever and however such harvest is most economical to their fishing operation, subject to program limitations and seasons. The higher catch limits in recent years reflect healthier stock conditions. Commercial halibut fishery landings in 2002 were almost 28,000 t and generated ex-vessel gross revenues of about $130 million.

The halibut fishery does not have an observer program to monitor bycatch, and the halibut fishery's logbooks do not require the reporting of discards. However, logbook data are used by the IPHC to estimate adult halibut mortality due to lost/abandoned gear in the halibut fishery and the IPHC stock assessment surveys collect bycatch data for undersized halibut and for other species. In addition, bycatch data are available for joint groundfish and halibut trips for which there is a groundfish observer. The uncertainty concerning the level of bycatch of some groundfish species, such as demersal shelf rockfish, is a concern. Seabird bycatch mortality also is a concern. Gear and fishery operation regulations are used to reduce seabird bycatch.

3.4.3 MMPA Category II Salmon Fisheries

Over ten Alaska salmon fisheries are classified as Category II fisheries under the MMPA. An observer program in the Prince William Sound, Cook Inlet, and Kodiak Island salmon drift and set gillnet fisheries documented incidental takes of marine mammals and seabird bycatch. Data on incidental mortality and serious injury confirmed the Category II classification of most of the observed fisheries, and resulted in the reclassification of two fisheries to Category III. NMFS is currently developing a more comprehensive observer program for the Category II Alaska salmon fisheries with the primary focus of determining the nature and extent of marine mammal interactions in these fisheries; seabird and other bycatch information will also be collected.

The MMPA sets out several goals for which observer data are used: (1) assessing whether the potential biological removal level of a stock is exceeded, (2) categorizing each fishery in the annual List of Fisheries, and (3) determining whether incidental mortality and serious injury of marine mammals from a fishery has reached insignificant levels approaching a zero mortality and serious injury rate. These goals each require an increasing level of precision and accuracy in estimates of serious injury and mortality. Determination of appropriate observer coverage levels to meet the needs of accuracy and precision is currently the subject of serious interest to NMFS' National Observer Program Advisory Team, and specific coverage levels for this program still

need to be assessed. Currently, the Alaska marine mammal program observes state-managed salmon fisheries on a rotational basis, with one or two fisheries observed per year for two consecutive years each at approximately 5% coverage. With over ten Category II fisheries to monitor for marine mammal bycatch, ten or more years may elapse before a fishery is observed again. Trends in fishery operations and marine mammal populations can change significantly in the intervening years, easily rendering observer data out of date. The program would ideally observe fisheries more frequently (probably no more than five years between observing a single fishery) and for more than two consecutive years in each rotation (probably three to four consecutive years). The current limiting factor in the development of this program is funding. Due to the remoteness of many of the fisheries, the average cost of observing one fishery is over $1 million per year, although cost savings can be realized in combining concurrent observation of geographically proximal fisheries.

There is a federal FMP for the relatively small salmon troll fishery in the EEZ off Alaska; however, the FMP defers management to the State of Alaska. All other salmon fisheries are strictly state managed. The management of the Alaska salmon fisheries is based on optimum sustainable yield and typically has resulted in healthy salmon stocks. Management of the Alaska salmon fishery strives to protect, to the extent possible, any depressed stock, including those originating south of Alaska.

Commercial fishing is conducted in both state and federal waters by about 5,000 relatively small fishing vessels or boats using troll, drift gill-net, set gill-net, and purse seine gear. All five Pacific salmon species are harvested by commercial, recreational, and subsistence fishermen. In 2002, about 283,000 t of salmon were landed in the commercial fishery with ex-vessel gross revenues of about $163 million. Due principally to depressed prices, this is the lowest level of ex-vessel revenues for the Alaska salmon fisheries in more than 20 years.

The intercepts of salmon, including ESA-listed Pacific Northwest stocks, passing through the marine waters off the coast of Alaska on their way to more southerly spawning grounds have been the focus of lengthy negotiations and debate among Alaskan, Canadian, and U.S. West Coast fishermen, management agencies, and governments. The Northwest Region has the lead for protecting the ESA-listed Pacific Northwest salmon stocks.

3.5 Northeast Region

Northeast fisheries are diverse both with respect to the species sought and the gear types employed. Fisheries for invertebrate species including American lobster, sea scallop, and Atlantic surfclam are currently the most valuable in the Northeast Region. Lobster landings are mostly taken with baited traps, with about 70% of landings from the Gulf of Maine. Sea scallop landings are derived principally from dredge fisheries (particularly on Georges Bank and in the Middle Atlantic). Fish species such as monkfish and menhaden also generate substantial revenues. The greatest volume of landed fish is derived from small pelagics (menhaden and Atlantic herring). Groundfish fishing is primarily by otter trawling, which accounts for about 70% of landings. In the Gulf of Maine, otter trawl target species include gadoids and flatfishes. Fixed-gear fisheries using gill nets and longlines target primarily cod, pollock, white hake, dogfish, and monkfish. On Georges Bank, gadoids, flatfish and mixed groundfish species are generally targeted. In Southern New England, groundfish fisheries primarily target whiting, yellowtail flounder, winter flounder, and monkfish. In the Middle Atlantic, groundfish trawling

targets summer flounder, scup, black sea bass, monkfish, winter flounder, tautog, and a variety of other species.

Regulatory discards (i.e., discard of undersized or trip-quota limited stocks) are an important issue in the Northeast region's groundfish fisheries. Historically, managers often selected minimum legal sizes for groundfish that resulted in the harvest of undersized fish, given the characteristics of nets used in the fishery, often resulting in substantial discards. Regulatory discards also occur when catches of certain stocks are limited by trip quotas. Discards of finfish and shellfish can represent a significant proportion of the catch, and represent an important source of fishing-related mortality. Management programs that control fishing mortality rates have been adopted for most of the region's fisheries. It is anticipated that with sufficient effort reduction, combined with other management regulations, the average size of fish in the population will increase, thus reducing the potential catch of undersized animals and regulatory discards.

Trip limits contribute to the discard of some species (e.g., summer flounder, haddock, and Atlantic cod). Trip limits for summer flounder are invoked when individual states approach their allocated share of region-wide total allowable catch (TACs). Minimum size regulations, as well as economic factors contribute to relatively high discard rates in a number of Mid-Atlantic fisheries, especially those for scup and, to some extent, black sea bass.

Small-mesh fisheries in the Northeast have undergone a great deal of scrutiny as managers have sought to minimize the catch of undersized groundfish, particularly in trawl fisheries. The trawl fishery for northern (pandalid) shrimp now requires the use of finfish excluder devices, which, when fished properly, reduce the overall proportional weight of non-shrimp catch, particularly of flatfish and gadoids.

Other small-mesh trawl fisheries of the region targeting silver and red hakes, herring, mackerel, squids, butterfish, ocean pout, and dogfish are subject to a performance criterion of less than or equal to 5% of the total catch comprised of regulated groundfish species (e.g., cod, haddock, redfish, pollock, white hake and five flounder species). On Georges Bank, a small-mesh fishery is allowed for whiting, but only in prescribed time periods and locations. Some fisheries have been curtailed altogether or geographically restricted to meet this performance criterion. Squid fisheries in the Mid-Atlantic and southern New England potentially generate discards of a number of commercial species.

Bycatch is an important consideration in allocation decisions among different gear sectors in the fishery. For example, Atlantic cod are targeted primarily by three gear types—otter trawls, gill nets, and demersal longlines. Mobile gears tend to have the highest overall discard rates. Gill nets using appropriate mesh are generally more selective than either trawls or hooks. Gear sectors are in competition for small overall target TACs for cod, and regulations are likely to change the relative proportions of the catch derived by the various gear types.

Takes of marine mammals and sea turtles are problematic in several of the region's fisheries. Bottom-tending gillnet fisheries targeting groundfish in the Gulf of Maine and Southern New England entangle harbor porpoise in numbers sufficient to be of concern to the long-term stability of the harbor porpoise resource. Gillnet fisheries in the Gulf of Maine also

entangle large whales, including the endangered right whale. Take reduction team activities have been focused on these fisheries to reduce interactions. Gillnet fisheries also result in mortalities of some seabirds, including shearwaters, gulls, and gannets. Mid-Atlantic coastal gillnet fisheries also take harbor porpoises and bottlenose dolphins.

Although infrequent, entanglements of whales in lobster gear are of particular concern. Given the status of right whales, any fishing activities that generate mortalities of this species are subject to mitigation measures. Nearshore trawl fisheries in the Mid-Atlantic have generated some takes of sea turtles, particularly during the summer, and the use of turtle excluder devices has been proposed. Large mesh gillnets are known to interact with sea turtles, and NMFS has prohibited their use in certain areas and at certain times based on sea surface temperature. NMFS also has worked with North Carolina to restrict gillnets in inshore waters. Pound nets in areas where currents are strong also have been documented to entangle sea turtles in large mesh leaders. Dredges used to harvest scallops also have been shown to impact sea turtles. Recent at-sea observer programs have documented high interaction rates in Hudson Canyon.

Bycatch in Northeast commercial fisheries is monitored primarily through the Fishery Observer Program of the Northeast Fisheries Science Center (NEFSC). Several states also conduct monitoring activities in their waters. The NEFSC program has operated since 1989. It is anticipated that approximately 11,000 sea days will be sampled in 2004 for monitoring of protected species and fishery discards. Discard data are also sought from fishermen in their mandatory logbook submissions. Preliminary information from this self-reporting program was correlated with observer estimates from identical trips. Although analyses suggest no obvious discrepancies, this may be due to the effect of the presence of the observer. Much more analysis of information and communication with fishermen is necessary before self-reported estimates of discards can routinely be incorporated into stock assessments.

3.6 Pacific Islands Region

Bottomfish fisheries occur throughout the Western Pacific region. The largest is in the Northwestern Hawaiian Islands (NWHI). Most of the bycatch in that fishery consists of three carangids (*Caranx ignobilis*, *Pseudocaranx dentex*, and *Seriola dumerili*) and sharks, all of which are discarded for economic reasons. The first two carangids and sharks have generally low market values and do not keep well. Most shark species require special on-board processing and storage to make their flesh marketable. The value of *S.dumerili* or kahala is very low because it has been implicated in ciguatera poisoning incidents. These species account for 80% to 90% by number of all bycatch in the fishery. It appears that no more than 25%, by number, of the catch in the NWHI bottomfish fishery is discarded. The mortality rate of discarded fish is highly variable among species. Although bottom-dwelling teleost fishes generally suffer high mortality from decompression while being brought to the surface, the carangid species that make up most of the bycatch in the NWHI bottomfish fishery are usually released alive and apparently viable.

Among protected species of sea turtles, marine mammals, and seabirds, only Hawaiian monk seals and Pacific bottlenose dolphins appear to have interactions with the NWHI bottomfish fishery, where they take fish from fishing lines. These species are rarely hooked and no fatal interactions have been documented. Seabirds have often been observed attempting to steal bait, but no hookings have been observed. Complete bycatch data are not yet available for

the bottomfish fisheries in the main Hawaiian Islands, American Samoa, Northern Mariana Islands, or Guam, but bycatch rates in those areas appear to be substantially less than in the purely commercial and distant-from-port NWHI bottomfish fishery.

An additional source of bycatch in the bottomfish fisheries is unobserved mortality, stemming from fish that escape from the hook and fish that are taken from the hook by predators. Research suggests that losses due to predation in the NWHI bottomfish fishery amount to perhaps 23-27 fish lost for every 100 fish boated.

Bycatch is assessed and reported in the bottomfish fisheries through logbook programs and creel surveys, many of which have undergone substantial improvements since 1996, when the MSA was amended to include bycatch requirements. A vessel observer program in the NWHI has provided important information on bycatch and bycatch mortality, including interactions with protected species. Fishery-independent data sources, including experimental fishing projects in American Samoa and the Mariana Islands, have also provided bycatch-related data.

The Hawaii-based longline fishery is the largest pelagic fishery managed by the Western Pacific Fishery Management Council (WPFMC). The longline fishery in American Samoa has grown rapidly in the last three years with the entry of more and larger vessels. The largest component of the bycatch in the Hawaii-based longline fishery is sharks, particularly blue shark. Sharks and other finfish species are discarded for economic reasons. According to vessel observer data, during 1994-2001, about 40%, by number, of the total catch in the Hawaii-based longline fishery was discarded. The percentage discard rate was about 13% for tunas, 15% for billfish, 63% for sharks, 32% for other Management Unit Species (MUS), and 97% for non-MUS.

In the past, many sharks were finned – that is, their fins were retained while their carcasses were returned to the sea. The finning rate peaked in 1999, when about 65% of all captured sharks were finned. Blue sharks represented 95% of all finned sharks. Two important regulatory changes in 2000 and 2001 substantially altered bycatch rates and bycatch mortality rates. State and federal prohibitions on shark finning increased the percentage of blue sharks that were discarded, decreased the blue shark absolute bycatch mortality rate (because blue sharks have relatively high post-hooking survival rates), and slightly increased the retention rate of whole blue sharks. The 2000 closure of the swordfish directed fishery also greatly decreased the catch of blue sharks and thereby decreased the fishery's overall bycatch rate. Vessel logbook data indicate that in 2001, 96% of the approximately 47,000 sharks caught in the Hawaii-based longline fishery were discarded.

Interactions between the Hawaii-based longline fishery and sea turtles were significant enough that the fishery, as managed in 1999, was determined under the ESA to jeopardize the continued existence of three sea turtle species: the loggerhead, leatherback, and green. Interactions between the longline fishery and false killer whales have reached levels that exceed the PBR of false killer whales. Subsequent regulations – particularly the closure of the swordfish-directed fishery – have resulted in substantially lower interaction rates with sea turtles. The Hawaii-based longline fishery interacts with several species of seabirds. Most interactions are with the black-footed albatross and the Laysan albatross. Regulatory changes aimed at decreasing the incidental catch of sea turtles, as well as new seabird-related measures, have led to

substantially lower interaction rates with the two albatross species, and probably have substantially reduced the likelihood of interactions with a third, endangered, species, the short-tailed albatross. An April 2004 final rule eliminated a seasonal closure for longline fishing in an area south of the Hawaiian Islands and reopened the swordfish-directed component of the Hawaii-based longline fishery. To minimize adverse impacts on sea turtles, the swordfish component of the Hawaii-based longline fishery is subject to restrictions on the types of hooks and bait that may be used, annual fleet-wide limits on fishery interactions with leatherback and loggerhead sea turtles, an annual fleet-wide limit on fishing effort, and other mitigation measures.

Reliable estimates of bycatch and bycatch mortality rates in the small-boat troll and handline fisheries of all the island areas are not yet available, but bycatch and bycatch mortality rates are believed to be relatively small because few species and sizes are unwanted and because when fish are discarded they are often in viable condition. An additional source of bycatch in the pelagic fisheries is unobserved mortality, but no estimates of likely mortality rates are available. Bycatch and protected species interactions are assessed and reported in the Hawaii-based longline fishery through a logbook program and a recently expanded vessel observer program. Bycatch in the American Samoa fishery is measured through creel surveys and a logbook program, and will soon be further assessed through a vessel observer program. Bycatch in the other pelagic fisheries is monitored through local catch reports and creel surveys.

A variety of operational and management measures are used to minimize bycatch and bycatch mortality in the bottomfish and pelagics fisheries. In the bottomfish and troll and handline fisheries, the gear types and fishing strategies used tend to be relatively selective for desired species and sizes. Measures that serve to further reduce bycatch in the bottomfish fishery include prohibitions on the use of bottom trawls, bottom gillnets, explosives, and poisons. In the pelagic fisheries, a prohibition on the use of drift gillnets is aimed at reducing bycatch. New area closures and gear restrictions have been very successful in minimizing the bycatch of sharks, marlins and protected species interactions. Longline vessels are also required to employ specified mitigation measures to avoid catching sea turtles and seabirds and increase the likelihood of their survival after being released. As mentioned above, the swordfish component of the Hawaii-based longline fishery is subject to restrictions on the types of hooks and bait that may be used, annual fleet-wide limits on fishery interactions with leatherback and loggerhead sea turtles, an annual fleet-wide limit on fishing effort, and other mitigation measures. Restrictions on the use of bottom-set longline gear are being developed to further reduce bycatch and protected species interactions. Bycatch reduction is also achieved through non-regulatory means, including outreach to fishermen and engagement of fishermen in research activities and the management process.

4. Alternative Methods for Monitoring Bycatch

Various methods are being used to monitor and estimate bycatch. Some of these methods may also be useful for developing bycatch reduction measures and for monitoring the effectiveness of such measures. The primary emphasis of this discussion will be on an evaluation of methods for monitoring bycatch levels in both commercial and recreational fisheries. Clearly, it is critical to have credible estimates of the type, rate, and level of bycatch currently occurring, as well as information on the fishing practices and other factors that may contribute to bycatch.

Several types of monitoring programs have been developed to estimate fisheries bycatch. These include the use of data collected aboard fisheries research vessels and chartered vessels, self-reporting by fishermen and/or other industry representatives, at-sea fisheries observers, video cameras, digital scanning devices, alternate platforms or remote monitoring, and stranding networks. The choice of which method or mix of methods to use for monitoring bycatch in a particular fishery is based on a number of factors including:

- Quality – in general, how precise and how accurate are the data that are collected?
- Completeness – does sampling cover the entire range of the fishery or fisheries that interact with the species of concern?
- Credibility – how well do the data stand up to scrutiny by affected stakeholders and other constituents?
- Cost – what are the relative expenses associated with the sampling method, and are there economies of scale that can be realized?
- Timeliness – how quickly are the data available to fisheries scientists, managers and fishermen?
- Safety – how safe is the methodology compared to other monitoring methods, and what safeguards are in place to ensure the safety of the data collectors?
- Logistics – how easily is the monitoring program implemented and maintained?

The following discussion of alternatives for monitoring and estimating bycatch highlight the preceding factors where relevant.

4.1 Fishery-Independent Surveys

It is possible to use fishery-independent surveys to estimate bycatch from a fishery. This

is done by multiplying the effort that occurs in the fishery (by relevant strata) times the rate of bycatch that is observed in fishery-independent surveys. The suitability of this approach depends on how closely the fishery-independent observation methods (gear, etc.) mimic those of the fishery. In order to discuss this more fully, one should understand the usual role of fishery-independent surveys within NMFS' research programs.

NMFS conducts a variety of surveys during specific seasons in both offshore and inshore waters, using both NOAA and chartered survey platforms. Surveys are conducted according to a schedule that varies according to the species sampled, the availability of survey platforms, and weather conditions (see NRC 2000, p.68, for a summary of NMFS Research and Charter Vessel Surveys). By definition, fishery-independent data are collected independently of fishing activities, and include information on the distribution, abundance, and biology of the species being assessed. These data are collected using standardized sampling gear (e.g., trawls, hooks, or pots), with multiple samples taken, distributed over the range of the stock (NMFS 2001).

The usual objective of fishery-independent research surveys is to provide information to characterize various species of concern, specifically year-to-year variation in abundance for these species. Other secondary goals may include spatial and temporal distribution patterns, size and age composition, fecundity measurements, and environmental monitoring. With any survey cruise, abundance levels and life history information for as many species as possible are gathered. In some cases, these may include species of concern for bycatch monitoring.

To determine the abundance of the various species, the measurement or index of interest taken during the survey is catch-per-unit-of-effort (CPUE). This value can be measured in either weight or number. The CPUE value is a product of two terms, the actual abundance of the species (N) and the catchability coefficient (q) related by CPUE = qN. The catchability coefficient represents the fraction of the stock removed per unit of effort. It is desirable that this coefficient exists as a constant, but many external factors can have pronounced effects on the catchability coefficient for a particular species. These factors include the type of gear, bottom topography, species distribution, and species size. The goal of this kind of research survey is to monitor the stock in a consistent manner such that the catchability coefficient is not systematically biased. In so doing, the CPUE derived from the survey is a measure of relative abundance of the stock.

There are five basic principles to which any research survey cruise must adhere if the research goals are to be achieved. Each of these principles is required for the species of interest.

1. The cruise should be synoptic in that it provides a snapshot in time (temporal component). Both fishing and natural mortality rates are an important consideration with this factor. If synoptic stock-wide surveys are not possible, assessment models may be used to estimate populations from partial surveys.

2. The survey should be stock-wide in area (spatial component). If only a fraction of the stock is sampled, calculated abundance levels can be misleading in assessments.

3. The sampling design should be well defined in order to obtain a representative sample of the stock; the usual approach is to use some type of random or stratified random statistical design.

4. The survey design should produce some level of useful precision with regards to the abundance estimate. Both the number of observations and the quantity of catch are important for this parameter. For each sample there must be enough of each species of interest, but not so much as to overwhelm the effort and cause complex sub-sampling efforts. Many bycatch species of interest may be comparatively rare in the sample. However, in most cases, the system is forgiving with this principle, and even low precision estimates can be, and are often, useful in assessment efforts.

5. The survey should control bias. It is important to keep all controllable factors as constant as possible, doing the survey in the same way, with the same gear.

In any regional research effort, both fishery-independent and fishery-dependent data are necessary to accurately assess the various fishery stocks and to address any potential bycatch-related problems. Resource survey trips are used to sample the stock. On the other hand, fishery-dependent trips (e.g., observers on commercial vessels) have the potential for much higher sampling effort. An increase in effort usually produces a higher level of precision, but it is possible that these fishery data are not representative of the stock. Basically, when both types of data are available, fishery-dependent data are mostly used to characterize the catch, while fishery-independent data is intended to characterize the stock.

When using fishery-independent information, consideration must be given to the following:

- Surveys do not always use commercial gear, and when commercial gear is used, it is often just one of a suite of gears that are being employed. Research gear is generally smaller and may be of a different configuration than gear generally used by commercial vessels.

- Surveys use a different fishing strategy than commercial fishing vessels. Whereas commercial fishermen generally strive to maximize their economic returns, survey cruises set gear at predetermined sampling strata, which are sampled year after year to ensure consistency.

- Surveys do not generally set gear for the same amount of time as commercial vessels, and rarely have tow durations of more than half an hour.

- Surveys are generally limited to certain seasons, whereas commercial fishing may occur year-round.

- Surveys may be limited to daytime sets, whereas commercial fishing may occur around the clock.

A resource survey program using otter trawl gear to sample shrimp resources has existed in the northern and western offshore waters of the Gulf of Mexico since about 1972. The survey collects CPUE data on all species collected with this gear. Data are collected using a stratified random sampling design. Data from these fishery-independent surveys have been used with some success to estimate bycatch levels of 13 species in the Gulf of Mexico shrimp fishery for years in which there was no observer coverage. Directly observed commercial finfish CPUE data from three observer programs in the 1980s (Turtle Excluder Device evaluations, turtle incidental catch project, and shrimp bycatch project) and one in the 1990s (shrimp bycatch program) provide good estimates of CPUE for various species during the periods of collection.

While directed observer observations are discontinuous in space and time, resource survey cruises provided a common thread that could link the disconnected data from the observer projects. A Generalized Linear Modeling (GLM) approach was used to estimate what shrimp vessel catch rates would have been in different years, areas, and seasons, had direct observations been made throughout. While this approach has been used initially to estimate bycatch levels in the Southeast shrimp trawl commercial fleet when no direct observations were made, it needs to be recognized that the data would only support broad breakdowns in time and space categories.

Estimation of the discard component of bycatch using information derived from fishery-independent surveys has also been employed in the Northeast region for selected species (Mayo et al. 1981, 1992). The technique essentially applies a filter derived from a selection ogive[4] to the size composition observed in research vessel surveys in concert with information derived from the commercial fishery. This method is currently employed to develop bycatch estimates for two stocks: witch flounder and American plaice.

In this example discard rates are also based on catch, effort, and length frequency data collected and recorded by the NEFSC Domestic Sea Sampling Program. Sea sample discard rates are expanded to total discards based on effort data collected and recorded in the NEFSC interview and weighout system, and on indices as determined by NEFSC spring and autumn bottom trawl surveys.

The credibility of bycatch estimates based in part on fishery-independent data will tend to be greater when the fishing operations that occur during the survey cruises and commercial fishing are similar.

4.1.1 Costs of Estimating Bycatch from Fishery-Independent Surveys

Although collecting fishery-independent data is expensive (up to $10,000 per day vessel

[4] An ogive is a curve relating the cumulative probability of an event (e.g., being retained by a type of fishing gear) as a function of an explanatory variable (e.g., the size of the individual).

operating costs), the primary objective of surveys is to provide information on abundance trends for stock assessments, and not bycatch estimates. Therefore, the additional cost of estimating bycatch from survey cruise data is relatively low, but may involve additional sampling of species considered to be bycatch.

4.1.2 Safety Aboard Fishery-Independent Surveys

Safety concerns are an issue any time data collection programs operate at-sea. These concerns exist aboard both NOAA vessels and chartered research vessels. NOAA vessels are overseen by NOAA's Office of Marine and Aviation Operations, and NOAA vessels must comply with safety requirements and conduct periodic safety drills (see http://www.moc.noaa.gov/all_ships/policy.htm for a discussion of shipboard policies with respect to safety). Although NOAA vessels are considered government vessels and are therefore exempt from regulatory oversight by the U.S. Coast Guard (USCG), NOAA requires that all of its vessels and small boats comply with or exceed all applicable regulatory and industrial standards. For scientists aboard non-NOAA vessels (such as chartered fishing vessels), NOAA requires that program managers assess the seaworthiness of vessels, the experience of the vessel operator and crew, and its capabilities for communications and emergency response. However, the additional safety concerns associated with collecting bycatch data on surveys are probably minimal.

4.1.3 Summary of Fishery-Independent Surveys

Fishery-independent and fishery-dependent sources of information may differ in several key respects. Fishery-independent surveys are intended to provide unbiased estimates of important population attributes such as abundance or size and age composition. Although it also is important that information derived from the fishery itself is unbiased (i.e., it is representative of the fishery in terms of catch-per-unit-effort, species composition, size composition of the catch, and other attributes), fishery operations are not intended to provide unbiased estimates of population attributes. It is therefore possible to have different signals from fishery-independent sources and those derived from the fishery. For example, a research vessel survey may detect a declining trend in overall population size while catch-per-unit-effort remains relatively stable as fishermen target concentrations of fish.

Inferences can be made from research surveys regarding what commercial bycatch might be. Fishery-independent surveys may be useful in estimating total bycatch for fisheries in which observer data are discontinuous. However, fishery-independent estimates do not replace the need for direct fishery-dependent observer data, and the models that are used to generate such estimates are best applied to complement direct observations of fishing effort from a developed observer program or as a beginning point for developing more mature observer programs. Fishery-independent estimates of bycatch will always be subject to criticism that the characteristics of the research effort are different from those of the fishery and that those differences are not adequately incorporated in the estimation process.

4.2 Fishery-Dependent Self-Reporting

Fishery-dependent data are data collected from commercial and recreational fishing activities, thereby providing information on removals associated with actual fishing operations. Self-reporting programs include fishing logbooks completed by fishermen, landings reports completed by fishermen and/or dealers (i.e., buyers or processors), and interviews of commercial and recreational fishermen. In some cases these programs collect bycatch data, but in most cases they provide effort or landed catch data that can be used with bycatch rate estimates from other sources (e.g., observer programs) to estimate bycatch. Dealer reporting is one type of self-reporting in which dealers are required to report the amounts of fish bought and sold, by vessel and by species. Dealer reporting is required by nearly all state resource agencies, but does not generally include reporting of at-sea discards. One exception to this is the Alaska Department of Fish and Game's requirement that all discards be reported; however, compliance is a concern.

4.2.1 Logbooks

Mandatory reporting requirements for logbooks are a type of self-reporting and are generally more detailed, and may include information on the type of gear used, date, time of day, and position of fishing activity, weather conditions, fishing characteristics of the deployment of the gear (e.g., tow length, number of hooks set), and catch of non-target species. Bycatch data reported in logbooks can be useful in estimating bycatch, but only if fishermen are willing and able to report bycatch accurately in the logbooks. Outreach and compliance programs can be of assistance with both. However, many logbook programs do not require the reporting of bycatch, or do not place a strong emphasis on accurate reporting of bycatch (Table 1).

The MMPA's Marine Mammal Authorization Program has as its primary focus the self-reporting of marine mammal incidental mortality and serious injury. Under the MMPA, all fishermen participating in a state or federal fishery that operates in U.S. waters are required to report all injuries and mortalities of marine mammals associated with fishing operations to NMFS within 48 hours of returning to port. This requirement was enacted by the 1994 amendments to the MMPA, and replaced a marine mammal logbook reporting requirement that had been in place for all Category I and II fisheries since 1989 (the Marine Mammal Exemption Program). However, the Program has not succeeded in obtaining reliable marine mammal bycatch data. Despite fairly good outreach and the distribution of reporting forms to all state and Federally-permitted fishermen each year, compliance with the reporting requirement is thought to be very low (Patricia Lawson, NMFS Office of Protected Resources, pers. comm.). Compliance with the previous Marine Mammal Exemption Program logbook requirement varied from fishery to fishery, but overall was also very low (Credle 1993).

Fox and Starr (1996) note that for logbooks to be useful for bycatch monitoring, cooperation from the majority of fishermen is critical.

4.2.1.1 Accuracy of Logbooks

Inaccuracies of logbooks primarily result from misreporting of species that are of little economic interest (particularly of bycatch species) and low compliance rates with reporting

requirements. If fishermen perceive that accurate reporting of bycatch will result in restricted fishing effort or access, they have an incentive to underreport. The effects of that incentive probably vary by fishery and fisherman.

The self-reporting system used in the Northeast for both landings and discards is typical and is presented here in some detail. Fishery statistics were collected in the Northeast under a voluntary reporting system prior to 1994. Landings and price data were collected by NMFS port agents and state personnel at the point of first sale through dealer reports or "weigh-out receipts". This information was complemented by interviews of vessel captains by NMFS port agents at dockside to collect detailed data on fishing effort and gear used and areas fished, and by a monthly canvas to collect landings data at secondary ports.

In June of 1994, voluntary reporting was replaced by a mandatory reporting system in which dealer reports were retained, and dockside interviews were replaced by a logbook reporting system. The dealer reports contain total landings by market category. The Vessel Trip Report (VTR) data contain information on area fished, species kept and discarded (in pounds), gear type (gear size, gear quantity, mesh size), and effort (number of hauls, haul duration and crew size). These data are from logbooks from charter, party and commercial trips, as well as logbooks that document that no fishing took place during a given month. Essential data elements such as location fished, gear used and amount of fishing effort, previously annotated by port agents through interviews, do not now exist in the dealer reports and must be extracted from corresponding VTRs. Dealer reports are assumed to provide accurate totals for landings and revenue; VTRs are the source of a subset of the dealer data.

This system is now used in all Northeast fisheries subject to federal FMPs, except the American lobster fishery. However, many vessels that fish for lobster are permitted under one or more of the remaining federal FMPs, and are therefore subject to mandatory reporting. The transition to the mandatory reporting system based on logbooks has resulted in concerns about data quality and reliability (NEFSC 1996), and the use of VTR data for discard estimation must be carefully evaluated on a case-by-case basis. Further comparison of discard estimates derived from the self-reporting system and other sources such as the Northeast observer program is essential. The observer coverage rates have increased over the last two years, making further calibration of different systems for bycatch estimation more reliable. If the self-reported data can be verified, the broad fishery coverage possible will substantially enhance estimation of bycatch. In the Northeast, a comparison of observer and logbook estimates of cod discards showed consistency in two of the three years that were examined.

The accuracy of self-reporting can be inferred from comparisons of discard information derived from logbooks or vessel trip report system and observers (either on the same trips or operating in similar areas). Logbook data submitted by Hawaii longline fishermen was compared to data gathered by longline observers (Walsh 2000). The study tested the assumption that the accuracy of logbooks in reporting species of major commercial importance (swordfish, bigeye tuna, and yellowfin tuna) would be greater than the reporting of species of lesser importance (spearfish and skipjack tuna), or species caught in great numbers (blue shark and mahimahi). The study also examined the accuracy of fish identifications on sets with protected species interactions, and compared reported fish catches to records from the same vessels that had sold their fish to a public fish auction (more information on the results of the accuracy of observer reports is in the next Section on observers). Sets with observed interactions with protected species were of particular interest, as observers were instructed to give these sets the highest

Table 1. Federally managed fisheries with mandatory logbook requirements and bycatch reporting requirements.

Region	Fishery/FMP (Gear Type(s))	Species of Bycatch Required to be Reported
Southwest	Coastal Pelagics – Sardine, Anchovy, Mackerel, Squid (Purse Seine, Lampara Net, Drum Net)[1]	None
	Highly Migratory Species – Swordfish, Tuna, Sharks (Purse seine, longline, troll/baitboat, drift gillnet, and harpoon)	All discards, including protected species
Southeast	Highly Migratory Species – Swordfish/Tuna/Shark (Limited Access Pelagic and Bottom Longline)	All discards, including protected and prohibited species
	Snapper/Grouper/Wreckfish (Bottom Longline, Trap)	All discards, including protected species
	Coastal Migratory Pelagics – Mackerel, Dolphin and Cobia (Gillnet, Handline, Troll Line)	All discards, including protected species
	Reef Fish (Bottom Longline, Trap)	All discards, including protected species
	Golden Crab (Trap/Pot)	All discards, including protected species
	Coastal Sharks (Bottom Longline)	All discards, including protected species
	Headboat/Charterboat (Rod and Reel)	None
Northwest	West Coast Groundfish (Limited EntryTrawl)[1]	All Fish
	At-Sea Pacific Whiting (Trawl)[2]	All Fish
	Recreational Salmon and Groundfish Charterboat/Party Boat	All Fish
Alaska	Bering Sea/Aleutian Islands Groundfish for vessels > 60' (Trawl, Longline, Pot, Jig)	All Fish
	Gulf of Alaska Groundfish for vessels > 60' (Trawl, Longline, and Pot)	All Fish
	Pacific Halibut (Longline)	None
Northeast	Groundfish Multispecies, (Trawl, Gillnet)	All discards, including protected species[3]
	Scallop (Dredge, Trawl)	All discards, including protected species[3]
	Monkfish (Trawl, Gillnet)	All discards, including protected species[3]
	Summer Flounder (Trawl)	All discards, including protected species[3]
	Scup,black sea bass (Trawl and Pot)	All discards, including protected species[3]
	Tilefish (Bottom Longline)	All discards, including protected species[3]
	Bluefish (Gillnet)	All discards, including protected species[3]
	Herring (Seine and Midwater Trawl	All discards, including protected species[3]

Table 1 (Continued)

Region	Fishery/FMP (Gear Type(s))	Species of Bycatch Required to be Reported
Northeast (Continued)	Spiny Dogfish (Gillnet)	All discards, including protected species [3]
	Red Crab (Pot)	All discards, including protected species [3]
	Squid, Mackerel, and Butterfish (Trawl)	All discards, including protected species [3]
Pacific Islands	Western Pacific Pelagics – Swordfish, tuna, shark (Longline)	All discards, including protected species
	Precious Corals (direct collection)	None
	Crustaceans (Traps)	All fish
	Bottomfish (hook and line, bottom longline)	All fish

[1] Reporting requirements outlined in state (not federal regulations.

[2] Voluntary reporting.

[3] Although reporting of all discards is required, only species codes for sea turtles are provided with the Vessel Trip Report instructions. Species codes for marine mammals and seabirds are not provided.

priority, and this may have introduced a bias with observers with respect to reporting catches of other species. The study found biases due to underreporting in logbooks, taxonomic errors by both novice observers and fishermen, difficulties by both groups in counting abundantly caught species, and incorrect use of logbooks (e.g., recording data in the wrong area of the logbook). The study also determined that the most common errors in logbooks were underreporting of catches and "rounding" of values reported for abundantly caught species catch. From this study, one could infer that logbooks may not be reliable for estimating bycatch of abundantly caught species or species of lesser economic value.

Further work evaluated the usefulness of logbooks to characterize fish catches for the unobserved segment of the longline fleet (Walsh et al. 2002), specifically blue sharks, a retained incidental catch in this fishery. This study reiterated the tendency of logbooks to underreport catches as compared to observer reports, but also revealed several cases of overreporting of blue shark catches in logbooks. However, data from logbooks in conjunction with observer data allowed the authors to model catches of blue sharks for the unobserved portion of the fleet, using a Generalized Additive Model (GAM). The authors also noted that reporting accuracy improved after the deployment of observers, presumably due to increased awareness among fishermen of their reporting requirement.

The advantage of logbooks as compared to other sampling methods is that logbooks are usually required of all fishery participants, and therefore represent a near-census of the fishery. There are few other sources of data for estimating fleet-wide effort by time and area. Reliable measures of effort are critical when using observed bycatch per unit effort to estimate bycatch for the fishery as a whole. However, if there is less than-complete-compliance with the logbook requirement, or reporting significantly misrepresents actual fishing effort (due to, for example, effort limitation regulations such as days-at-sea limits), extrapolated bycatch estimates may be inaccurate.

4.2.1.2 Costs Associated with Logbook Programs

The costs of logbook programs to the agency which conducts the program are typically less than the costs of observer programs, if compared on a per-sea-day basis. The costs to the agency include producing and distributing the logbooks, data entry, database maintenance, and analytical costs. As with fishery surveys, logbooks are generally not implemented solely to collect information on bycatch. Therefore, the cost of collecting bycatch data via logbooks is marginal, and may be limited to costs associated with the entry and analysis of the bycatch data.

4.2.1.3 Safety and Logistics of Logbooks

Concerns regarding safety are limited to concerns that already exist with fishing operations, which are substantial for fishermen but basically nonexistent for those processing logbooks.

Logistics associated with logbook programs considered here include the timeliness of data submission to the government, the time required for data entry, and promising advances in the use of technology for more timely reporting of logbook data.

Timeliness of data varies with the fishery. Requirements for submission of data may range from a weekly basis to an annual basis. Timeliness and overall compliance with the reporting requirement can be improved if the issuance of permits is contingent on the submittal of logbooks (this system is only applicable where permits are required). In some cases, port agents or other agency employees or contractors collect logbooks dockside, which also increases timeliness and compliance.

Data entry can be time-consuming, and can delay accessibility to the data. A rigorous quality control program must be integrated into data entry, with at least 5-10% of logbooks double entered and safeguards in the software to minimize transcription errors (such as the use of dropdown pick lists, and verification of entries that fall outside preestablished ranges).

Recent advances in technology have automated the collection and entry of self-reported fisheries data in some fisheries, and these advances hold the promise of more timely estimates of effort for use in catch and bycatch estimation on a real-time or in-season basis. They can also be a source of reliable information when spatial and temporal information is conveyed automatically for each set (e.g., systems that have built-in GPS and time/date stamp units). Electronic logbooks can also reduce the frequency of transcription errors, but they may introduce other errors. Proper training of fishermen in data entry is critical but can be less rigorous for well-designed programs. Secure data transfer systems are also critical.

4.2.1.4 Logbook Program Summary

Logbooks may provide qualitative estimates of bycatch where bycatch is required to be reported; however, the accuracy of these data is of concern. Logbooks are more useful in providing estimates of total effort by area and season that can then be combined with observer data to estimate total bycatch. Safety concerns associated with logbook programs are minimal, as compared to at-sea data collection programs. Logistics associated with processing the data

collected have limited its usefulness, but may be aided by recent technological advancements designed to increase the speed at which data are transferred while also improving the quality of data submitted.

4.2.2 Port Sampling

Port samplers are federal or state government-employed or contracted biologists trained to collect fishery information and biological samples from fishermen and/or dealers, at or near the time of landing. In some cases, the presence of a port sampler is required to offload fish (the port sampler is making direct observations of what is landed); in other cases, a random sampling strategy is employed, while taking advantage of opportunistic sampling where possible.

Port samplers collect information primarily on catch, but also on bycatch when such information is available. Bycatch data collected by port samplers are similar to logbook data in that there are significant concerns about the completeness and accuracy of these reports. Because fish discards are not observed by the port sampler, information on discards is less reliable than information on landings. Data from interviews with fishermen or dealers may not be representative of total catch, as they depend on the ability and willingness of these individuals to report catches accurately. Biological sampling is limited to only the landed catch. In addition, port sampling typically results in only a small sample of total fishing effort, and port samplers are not consistently used in all U.S. ports. An advantage over logbooks, though, is the timeliness of these reports and their usefulness in directing further sampling towards potential problem areas.

4.2.3 Recreational Sampling

In most coastal states, recreational fishery data have been collected under the annual Marine Recreational Fisheries Statistics Survey (MRFSS) since 1979. The objective of this survey is to provide estimates of recreational catch and effort over fairly large strata (by state and two-month period). In 1997, nearly 17 million anglers made 68 million marine fishing trips to the Atlantic, Gulf, and Pacific coasts. The estimated marine recreational finfish catch was 366 million fish, and more than 50% of the fish caught were released alive. The survival rates for the released fish are highly variable.

The MRFSS data are collected by two independent but complementary surveys: (1) a telephone survey of households in coastal counties, and (2) an intercept (i.e., interview) survey of anglers at fishing access sites. The telephone survey is used to collect reliable data on recreational fishing effort. Information on the actual catch (and bycatch), such as species identity, number, and both weights and lengths of fish are collected via the intercept survey. Estimates of landed catches are based primarily on direct observations made by trained samplers. Estimates of bycatch are based on self-reporting during the intercept interviews. However, because fish discards are not observed by the interviewer, information on bycatch is less reliable than information on landings.

In an effort to increase the quality of data on bycatch, NMFS has also initiated an at-sea component of the intercept survey on the party/headboat fleets. This sampling is currently focused on vessels operating in the Atlantic. NMFS also funds at-sea data collection in Pacific states through the Pacific States Marine Fisheries Commission's Recreational Fisheries Information Network (also known as RecFIN). If this program is successful, it would improve

the accuracy of counts and species identifications of discards and provide estimates of size distribution of discarded fish, which are currently unavailable (Dave Van Voorhees, NMFS Office of Science and Technology, pers. comm.).

4.3 At-Sea Observations of Fishing Operations

4.3.1 At-Sea Observers

At-sea fisheries observers are biologists trained to collect information onboard fishing vessels. Observers may be deployed for various reasons, including monitoring of protected species interactions or total removals (including discarded species), monitoring compliance with fishery regulations or other environmental laws, validating or adjusting self-reported data, providing vessel-by-vessel catch, providing data to support in-season quota management, and monitoring experimental or exempted fishing activities. See NMFS (2004) for a more detailed discussion of observer program goals and objectives.

Regardless of the primary objective for placing observers in a fishery, at-sea observers are generally trained to collect information on the catch and bycatch, as well as information on the disposition (e.g., released alive vs. dead, or where hooked in the case of protected species taken in longline fisheries) of some or all of the bycatch species. Observers routinely collect biological samples and also may assist with fisheries research or tagging studies. Besides data on catch and bycatch, observers may also collect information on gear used, vessel type and power, fishing techniques, fishing effort, gear characteristics, environmental conditions, and, in certain fisheries, economic information (e.g., crew size, crew shares and the cost of fuel, bait and ice).

The wide range of information collected by observers is useful for analyzing life history, determining gear selectivity and fishing efficiency over time, and studying the behavior of fish and fishermen. Observer data can also be used in combination with information collected from fishery-independent sources, port observations, and landings receipts to estimate the relative abundance of target and bycatch species in some fisheries.

NMFS' authority to place observers on certain fishing vessels comes from the MSA, the MMPA, and the ESA, as well as other marine laws. Table 2 summarizes fisheries that recently have had some level of mandatory or voluntary observer coverage under federally managed observer programs.

4.3.1.1 Estimating Bycatch

The impetus for implementing an observer program is often based on bycatch of one or more species. In most fisheries, it is neither physically nor economically feasible to monitor all fishing effort, catch and bycatch and to do so without measurement error. The factors that prevent this include funding limitations, observer program costs, safety considerations, and logistical constraints. Therefore, observer programs usually sample a portion of total effort. The reliability of the resulting bycatch estimates is then gauged by such factors as the precision and accuracy of the estimates.

Bycatch mortality can be estimated using standard approaches in which the estimated bycatch per unit effort for each stratum is multiplied by the total effort and the proportion of bycatch that die in that stratum (Hall 1999). Fishing effort can be determined from observer data in fisheries where observers are monitoring all fishing effort. However, for most fisheries, fishing effort is derived from self-reporting, such as logbooks, port sampling, or landing receipts. Alternatively, bycatch mortality can be estimated by multiplying observer estimates of bycatch per unit of landed catch, total landed catch and the proportion of bycatch that die by stratum.

The proportion of individuals discarded that die can be determined from observer estimates of the proportion of bycatch in each of several viability categories and research that links a specific discard mortality rate to each category. That research includes tagging animals before they are released and tracking them after they are released, holding the animals in nets or tanks, and conducting stress tests on bycatch species in a controlled environment. The post release mortality is often referred to as "latent mortality." For example, the mortality rates of discarded Pacific halibut vary between 16-100% depending on gear type (Williams et al. 1989) and method of release (Hoag 1975). The reliability of the bycatch mortality estimate must then also take into account the reliability of the effort or landed catch estimate and the reliability of the latent mortality estimate.

4.3.1.2 Precision of Bycatch Estimates

The measure of precision commonly used in reference to estimates of bycatch is the coefficient of variation, or CV, which is given by the ratio of the square root of the variance of the bycatch estimate (i.e., the standard error) to the estimate, itself. The lower the CV, the greater the level of precision. The CV of an estimate can be decreased by increasing the number of observations which increases sampling cost. However, as the number of observations is increased, the CV decreases at a decreasing rate. For large samples, the CV of an estimate is inversely proportional to the square root of the size of a sample. This means that at some point a further increase in the number of observations cannot be justified in terms of the reduction in the CV and the associated benefits of the more precise estimate given the increase in sampling cost. Therefore, managers seek to achieve a level of sampling that has an acceptable balance between precision (CV) and cost. Figure 1 illustrates the nature of the relationships between the number of observations and both the CV of the estimate and sampling cost. The specific relationships will vary by fishery and species.

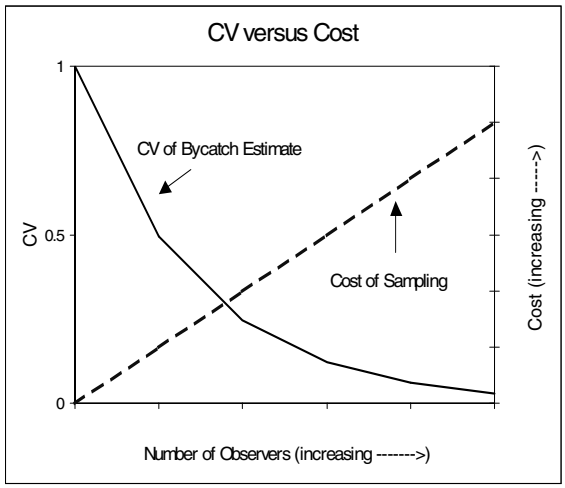

Figure 1. Trade-offs between precision (CV) and cost.

Fogarty and Gabriel (unpub. ms.) calculated first-order estimates of relative precision for discard rates of key species in the Northeast groundfish fishery, based on observed bycatch rates at a trip level, stratified by quarter. The relative precision is determined by scaling the standard error of the discard estimates and dividing by the discard level. The relative precision of discarded catch estimates (by stock) ranged from 0.13 for American plaice, to 1.56 for the Gulf of Maine-Georges Bank windowpane flounder, illustrating the difficulty in designing a sampling program that generates precise estimates for all bycatch species. For the

Table 2. Fisheries with federally managed observer programs.

Region	Fisheries	Authority to place observers	Program duration
Southwest	California/Oregon Pelagic Drift Gillnet	MMPA Cat. II, MSA	1990 to present
	California Set Gillnet	MMPA Cat. I	Reinitiated in 2003
	California Pelagic Longline	MMPA Cat. II, MSA	2002 to present
	Coastal Purse Seine for Tuna	MSA	Initiated in 2004
	Troll Albacore	MSA	Initiated in 2004
Southeast	Southeastern Shrimp Otter Trawl (including rock shrimp and calico scallop)	Voluntary	1992 to present
	Southeast Directed Shark Gillnet	MMPA Cat. II, MSA	1998 to present
	Atlantic Pelagic Longline	MMPA Cat. I, MSA	1992 to present
	Southeast Directed Large Coastal Shark Bottom Longline	MSA	1994 to present
Northwest	West Coast (CA/OR/WA) Groundfish Trawl and Non-Trawl Gear	MSA	2001 to present
	Pacific At-Sea Whiting Trawl	Voluntary	1975 to present
Alaska	Bering Sea/Aleutian Islands and Gulf of Alaska Groundfish Trawl, Longline and Pot Fisheries	MSA	1973 to present
	Alaska Inshore Salmon Gillnet and Purse Seine Fisheries – (Kodiak Setnet planned for FY04)	MMPA Cat. II	1999 to present
Northeast	New England Groundfish Trawl and Fixed Gear (including gillnet) Fisheries	MMPA Cat. I (gillnet only), MSA	1990 to present
	Mid-Atlantic Coastal Gillnet (includes monkfish, dogfish, and several state fisheries)	MMPA Cat. I	1994 to present
	Mid-Atlantic Small Mesh Trawl (Squid, Mackerel, Butterfish)	MMPA Cat. I, MSA	2001 was first year of dedicated funding
	Mid-Atlantic Large Mesh Trawl (summer flounder, bluefish, monkfish, dogfish)	MSA	1998 to present
	Atlantic Sea Scallop Dredge - Closed Areas Exempted Fishery	MSA	1999 to present
	Atlantic Sea Scallop Dredge - Open Areas	MSA	1994 to present
Pacific Islands	Hawaii Pelagic Longline	MSA	1994 to present

flounder example, the use of combined strata substantially improved the precision of the estimate. However, this analysis was based on non-target species that are easy to identify. The true challenge occurs when species are not readily identifiable and when several species need to be identified in a single haul. If the same type of study were conducted with 80 to 100 species, the results might be quite different because of the difficulty encountered for species with patchy

spatial or temporal distributions. Sampling designs and precision goals are examined in Section 5.

4.3.1.3 Accuracy and Bias of Bycatch Estimates

Observer programs strive to achieve samples that are representative of both fishing effort and catches. Representativeness of the sample is critical not only for obtaining accurate (i.e., unbiased) estimates of bycatch, but also for collecting information about factors that may be important for mitigating bycatch. Bias may be introduced at several levels: when vessels are selected for coverage, when hauls are selected for sampling, or when only a portion of the haul can be sampled. Biases in sampling may also be introduced just by having an observer onboard the vessel, this is referred to as the observer effect.

Vessel selection strategies vary from fishery to fishery, depending on how the fishery is prosecuted, the nature of the observer program (voluntary vs. mandatory coverage), the distribution of fishing vessels, and safety and accommodation concerns. In the West Coast groundfish fishery, vessels are selected for coverage for an entire two-month cumulative trip limit (NWFSC 2003). This selection strategy minimizes bias associated with estimation of discards, as the tendency to discard certain species that are managed by trip limit quotas may increase as the trip limit period draws to an end (Jon Cusick and Rick Methot, NMFS Northwest Fisheries Science Center, pers. comm.). Voluntary programs may be designed to achieve a representative sample, but may be subject to bias if there are refusals by selected vessels. The fishing effort associated with vessels fishing out of one or a few major ports may be easier to track to ensure randomization of observer coverage than with vessels fishing out of many smaller ports. Concerns regarding safety or accommodations may limit the pool of sampled vessels and affect NMFS's ability to achieve a random sample. Therefore, vessel selection strategies must be representative of actual fishing effort, in terms of time (i.e., over the entire fishing season) and space (i.e., over the full geographic range of the fishery), as well as vessel type, gear type and targeting strategy.

Once the vessel has been selected for coverage, either all hauls are sampled, or a portion of the hauls are sampled. For fisheries that operate around the clock, where only a portion of the hauls can be sampled, methodologies must be used that randomize which hauls are chosen for sampling. The North Pacific Groundfish Observer Program uses a combination of Random Sampling Tables and Random Break Tables to assist observers in determining which hauls should be sampled to ensure randomness (AFSC 2003).

In certain fisheries, such as some trawl and purse seine fisheries, observers may only be able to sample a portion of the entire catch in a sampled haul. Sampling methodologies have been developed in the North Pacific groundfish trawl fishery to ensure a random sample of the catch is taken, and observers are also encouraged to maximize their sample size to minimize bias. However, they are also cautioned to be aware of sources of bias such as mechanical interferences that affect how fish flow to the point where they are sampled, or deliberate interference and intentional pre-sorting of the catch, and steps that should be taken to avoid and/or document these biases (AFSC 2003). Sampling of the catch can also be biased in gillnet or longline fisheries, if an observer is unable to see the net or line as it comes out of the water, due to where the observer is physically located on the vessel or due to weather conditions that may limit visibility. In these instances, animals may be caught but released before being brought on board, without the observer's knowledge or before the observer is able to make a positive species identification.

Another source of bias is known as the "observer effect". The observer effect is the change in fishing behavior caused by having an observer onboard a vessel. This can result in avoidance of known "hot spots," reduced fishing effort, or extra attention paid to the quick release of live animals. This may also result in interference with observer sampling by the crew or intimidation of the observer in order to prevent observers from making accurate estimates for observed hauls. When it is reported, such interference and intimidation can be addressed by observer program managers and enforcement officials. The management regime can affect both the nature and magnitude of the observer effect. For example, if there are bycatch limits that can either close a fishery or trigger time and area closures, fishermen will have a greater incentive to take actions that result in an observer effect bias.

The observer effect can be difficult to measure and account for. Although increases in observer coverage may increase the accuracy of bycatch estimates by decreasing the chances that observed operations are not representative of all operations, this is not recommended without first attempting to quantify this effect through some other, independent assessment of fishing activity. This could include analysis of data from logbooks, landings reports, Vessel Monitoring Systems (VMS), or electronic monitoring programs. In some cases, a compliance program will be needed to decrease some of the bias introduced by the observer effect.

It can be difficult to determine how representative the observed catch and effort are of total catch and effort in a fishery and how accurate the observer estimates are for the sampled catch. It is more difficult to do either for new programs or programs with low levels of coverage, where knowledge is limited regarding the unobserved portion of the fleet.

Determining the accuracy of observer data can be difficult unless there are methods for validating these data. Walsh et al. (2002) evaluated data collected by observers in the Hawaii longline fishery against auction house data and found that, overall, occurrences of errors were low, and errors either in the misidentification of pelagic species or in the enumeration of abundantly caught fish were more likely to occur due to inexperience in either the job or the fishery, or the poor performance of a single individual. Walsh et al. (2002) concluded that the relatively small number of errors in the Hawaii observer data set increased the usefulness of these data in verifying the accuracy of logbook data.

Where bias cannot be eliminated through adherence to strict sampling protocols, it must be accounted for by measuring the extent of the bias and incorporating this into analysis of the data.

The adequacy of samples obtained in an observer or other bycatch data collection program must be viewed in terms of both the precision and accuracy of the resulting bycatch estimates. The *accuracy* of an estimate is the difference between the mean of the sample and the true population value. The *precision* of an estimate is essentially how repeatable an observation would be if a number of independent trials were to be conducted. The *mean square error* (MSE) of an estimate is composed of two additive elements, the variance of the estimate and the square of the bias (Cochran 1977, pp. 15-16). It is possible to partition considerations related to the accuracy and precision of bycatch estimates, but a full evaluation requires estimates of both elements. Obtaining independent estimates to assess bias fully can be particularly difficult but should be carefully pursued.

Babcock et al. (2003) examine important issues related to the potential for bias in bycatch estimates derived from observer programs due to factors such as non-random sampling and changes in fishing tactics when observers are onboard (the "observer effect"). The difficulty in obtaining a strictly random sample is evident in many observer programs where logistical

constraints in scheduling and variable levels of cooperation are common. Often, sampling has been undertaken on an opportunistic basis, particularly during the initial stages of development of an observer program. The potential for changes in the behavior of fishermen when observers are onboard must be recognized. Avoidance of areas where bycatch might be high and changes in trip duration or other aspects of fishing operations when observers accompany the vessel can result in bias in estimates of bycatch. Babcock et al. (2003) recommend that comparisons of observed and unobserved vessel trips be routinely made to check for potential bias. Possible checks based on widely available information include comparisons between observer-reported information and the landed component of the catch for the fleet as a whole (e.g., Liggens et al. 1997, Sampson 2002). Such comparisons should be implemented in all observer programs, although it must be recognized that these checks cannot ensure that bias in bycatch estimates is not present. Comparisons of factors such as trip duration, tow or haul duration, fishing location, and catch-per-unit-effort and other metrics characterizing a fishing trip made between observed and unobserved trips can also provide important checks on the adequacy of sampling. These comparisons will often necessarily be made against self-reported information from the fishing fleet, and appropriate care must be taken in interpretation.

Babcock et al. (2003) recommend that 20% of all fishing trips for common species and 50% of all trips capturing "rare" bycatch species be sampled. They note that, "The required level of coverage, however, could be much higher or much lower for a particular fishery depending on the size of the fishery, distribution of catch and bycatch, and spatial stratification of the fishery." The proportion of hauls that are sampled during an observed trip and the proportion of the catch in the observed hauls that are sampled, not just the proportion of trips that are sampled, should be considered in any discussion of the actual or desired observer coverage level.

In this report, we focus on the coefficient of variation of the estimated bycatch rather than percentage coverage and maintain that the coefficient of variation is a more relevant measure. The proportion of trips covered does, however, directly enter into the calculation of precision through the finite population correction factor. When bias is present, the mean square error should be used as the measure of variability.

Babcock et al. (2003) further state that increasing the percentage coverage of trips reduces the likelihood of an observer effect. In essence, it is argued that, as the level of coverage is increased for a specific vessel, the cost of altering fishing tactics when an observer is on the vessel is increased; therefore, the net incentive to alter fishing tactics is decreased. Although there is substantial uncertainty concerning both the extent of this behavior and the change in behavior that would be associated with a given increase in observer coverage, the expectation is that both would tend to vary by fishery, if not by vessel or fisherman. Fishery specific research would be necessary to provide the information necessary to determine whether an increase in coverage can be justified in terms of a reduction in this type of observer effect. It may be possible to test for such behavioral change in observer programs in which increases in the coverage level have occurred over time.

4.3.1.4 Cost and Logistics in Observer Programs

Observer programs can be one of the most expensive monitoring methods available for estimating bycatch. Direct expenses include the cost of recruiting and training observers, salaries and benefits (including premium pay while at sea and on-call pay while waiting for a vessel to depart), contractor profit, travel costs, gear and equipment, and insurance (which can be up to 30% of the cost of a sea day). Some programs also provide a food allowance to the observer or the vessel while the observer is deployed at sea ($20 to $25/day). The Southeast shrimp trawl observer program pays $150/day to fishermen for time and shrimp lost due to testing of gear.

Indirect expenses include the salaries and benefits of NMFS employees that oversee the largely-contracted workforce, sampling design and data analytical support, data entry, and database design and maintenance. Currently, direct expenses may range from $350 to $2,000 per sea day. Increased costs are associated with observation of seasonal fisheries, fisheries operating in remote areas, low effort fisheries that require 100% coverage, fisheries with unpredictable levels of effort, and fisheries that have fishermen embarking unpredictably out of any number of ports.

Because observer programs are expensive, their use has been limited to date to fisheries with known or suspected high levels of bycatch. This creates gaps in knowledge where bycatch may be occurring but is not being documented. Inconsistencies in funding from year to year can also affect sampling effort over time, creating disparate data sets, and introducing additional sources of bias.

Currently, the majority of NMFS observer programs are government funded. Notable exceptions include the observer programs for the North Pacific groundfish fishery, the at-sea Pacific whiting fishery, and the Atlantic scallop fishery operating in closed areas. Consideration should be given to how much NMFS should pay and how much specific fleets should pay (in the form of fees or payments), and whether fisheries should be provided with incentives for having vessels pay, as in the case of the closed area scallop fishery, where vessels that participate in the fishery are able to offset observer costs with increased harvest and gross revenues which are provided by having access to areas that are otherwise closed.

The logistics associated with implementing observer programs and deploying observers can be substantial. Considerations include procurement of observer services, observer training, moving observers around, minimizing down time, and deployment of observers in highly mobile fisheries or fisheries operating out of many ports. Experience in deployment of observers can minimize logistical difficulties. NMFS has effectively implemented observer programs in each region of the United States. The National Observer Program in the NMFS Office of Science and Technology provides a forum for sharing experiences and addressing logistical as well as policy issues to increase the efficiency and effectiveness of observer programs nationwide.

Realizing the potential for timely access to observer data can increase the benefits of an observer program relative to other data collection methods. Real-time access by fishermen to observer data in the North Pacific groundfish fishery has resulted in reduced bycatch of Pacific halibut and, consequently, longer fishing seasons; and real-time access by fishery managers allows for inseason management of groundfish quotas in terms of total catch and of non-groundfish bycatch quotas. Real-time access by fisheries managers to observer data collected in the Pacific at-sea whiting fishery allows for in-season management and minimization of Pacific salmon bycatch.

More widespread sharing of bycatch data could help reduce bycatch and keep bycatch-limited fisheries open longer. However, the proprietary nature of observer data may limit its effectiveness in pursuing collaborative approaches to mitigation that involve sharing of data with fishery groups or non-governmental organizations.

Fadely (1999) argued that in the case of some Alaska fisheries where strandings or other information confirm fishing-related mortality of marine mammals, the best use of funds may be in outreach efforts to mitigate bycatch, rather than the collection of precise data on the level of bycatch occurring. Due to limited funds for the deployment of observers in the Gulf of Mexico shrimp otter trawl fishery, the design of the sampling program is geared more towards monitoring the effectiveness of gear modifications in reducing turtle and finfish bycatch than for bycatch estimation.

4.3.1.5 Safety in Observer Programs

The safety of observers is a significant factor that should be considered in any expansion of observer coverage. Fishing is widely recognized as one of the most dangerous professions (U.S. Dep. of Labor 2002). While a high level of safety training is provided in all NMFS observer training programs, NMFS is limited in its ability to ensure the safety of an observed vessel, beyond requiring the vessel to take reasonable actions to ensure the health and safety of an observer. In 1998, NMFS published a final rule implementing the Observer Health and Safety regulations, in response to a directive in the MSA that required NMFS to:

> Promulgate regulations, after notice and opportunity for public comment, for fishing vessels that carry observers. The regulations shall include guidelines for determining—
> (1) when a vessel is not required to carry an observer on board because the facilities of such vessel for the quartering of an observer, or for carrying out observer functions, are so inadequate or unsafe that the health or safety of the observer or the safe operation of the vessel would be jeopardized; and
> (2) actions which vessel owners or operators may reasonably be required to take to render such facilities adequate and safe.

The Observer Health and Safety regulations specify that observers are not required to board an unsafe vessel (as defined by the lack of a U.S. Coast Guard safety decal or other license certifying the presence of certain safety equipment onboard). In most programs, observers are instructed during training not to deploy on a vessel that does not have a current vessel safety decal. However, this has not been a consistent policy in all NMFS observer programs. Even if a safety decal is present, observers may judge a vessel to be unsafe and may refuse to board the vessel. On the other hand, observers have significant incentives to deploy on questionable vessels or risk losing a deployment opportunity (and the associated pay for that deployment).

These regulations are in the process of being revised to require that all observed vessels display a current and valid safety decal, submit to and pass a pre-trip safety check, and maintain safe conditions at all times an observer is onboard. Additional measures that could be implemented include the requirement that each vessel in an observed fishery show proof that it has a current and valid safety decal as a term and condition of receiving or renewing a federally-issued fishing permit or license, and that unobservable vessels not be allowed to participate in a fishery that has a mandatory observer coverage requirement. However, this policy may favor larger vessels that can accommodate observers and exclude smaller vessels that cannot pass minimum safety and accommodation requirements.

The placement of government-employed observers on fishing vessels involves significant risk to the government, and over time this risk has been transferred to contracted observer service providers. NMFS is pursuing policy and legislative alternatives for addressing this risk, in close cooperation with observer service providers, observer representatives, fishing vessel owners and operators, the insurance industry, and risk management professionals (NMFS 2002b and 2003).

4.3.1.6 Observer Programs Summary

Observer programs are a reliable source of data for estimating bycatch. The precision and accuracy of bycatch estimates are determined by sample size and the design and execution of a robust sampling scheme. Identifying and accounting for sources of bias is critical, as are measures to increase both the cost effectiveness and safety of observers.

4.3.2 Digital Video Cameras

The use of video cameras to monitor at-sea fishing operations is a relatively new technique, and has only been used in select fisheries to date. The methodology involves mounting one or more tamper-proof digital video cameras in various areas on a fishing vessel's deck or hull, and recording all or a portion of the fishing activities. An overview of the methodology being used by the primary developers of this technology, Archipelago Marine Research, can be found at: http://www.archipelago.ca/em-techno.htm. The components of a digital video monitoring system (also called an electronic monitoring system, or EM) are illustrated in Figure 2.

This technology can be used to monitor fishing activities to augment, or where appropriate, replace onboard observers. It can monitor such factors as the time and area of fishing, the use of special fishing requirements (e.g., tori lines), compliance with onboard catch handling requirements, and species caught and/or discarded. It was determined to be a promising option for assessing bycatch of seabirds in the Pacific halibut fishery off Alaska (Geernaert, et al. 2001). This technology has been applied on an experimental basis in at least three federally-managed fisheries: the Pacific halibut longline fishery off Alaska, the Alaska groundfish trawl fishery and the Pacific whiting trawl fishery. It is also being used extensively in several Canadian fisheries.

A recently completed pilot program in the Pacific halibut longline fishery off Alaska has found video cameras to be extremely useful in compliance monitoring (Shannon Fitzgerald, Alaska Fisheries Science Center, pers. comm.). Video cameras also recognized 91% of seabirds intentionally placed on the longline, with 64% of these identified to species. Reporting on a pilot study to determine the feasibility of electronic monitoring (EM) of seabird interactions with trawl third-wire cables in the groundfish fisheries off Alaska, McElderry et al. (2004) concluded that: (1) EM could effectively monitor seabird interactions with trawl third-wire cables; (2) the EM system provided imagery of sufficient quality to detect the presence, abundance, and general behavior of seabirds during most daylight fishing events; (3) EM-based imagery was also able to detect third-wire cable entanglements of seabirds although it was not possible to determine the cause of these entanglements; (4) EM imagery was not very useful for seabird enumeration and species identification: (5) in regard to monitoring seabird interactions with trawl third-wire cables, EM would be suitable for monitoring the use and effectiveness of mitigation measures; and (6) EM is more efficient and effective than observers for monitoring seabird interactions with the trawl third-wire cables as many hours can be recorded and the imagery can be replayed at a controllable viewing speed and because observers have a variety of functions to perform, it is impractical to have an observer monitor these interactions for more than a small fraction of the time a vessel is fishing. The EM system used in this pilot study included two closed circuit television cameras, GPS, hydraulic and winch sensors, and on-board data storage.

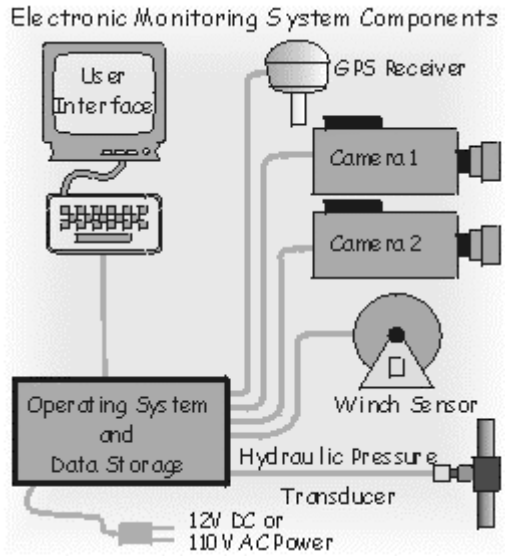

Figure 2. The components of a digital video monitoring system (courtesy Archipelago Marine Research)

The cost of video monitoring includes the cost of the equipment (three-five cameras per vessel

and a computer with a removable hard drive), installation of cameras on vessels, and post-cruise analysis of the video stream. The estimated cost to equip 10 vessels for 60 days, including analysis of video, is approximately $90,000 (Howard McElderry, Archipelago Marine Research, pers. comm.). The equipment cost could be lower on a per day basis if the units were installed for a longer time period; however, the costs of analyses per day of video are more fixed. The units are somewhat tamper-proof, using the same safeguards as security cameras mounted in public areas. However, no camera is completely tamper-proof.

Concerns among fishermen regarding the widespread application of video monitoring are significant, and include the confidentiality of the images collected, and the potential for lawsuits if video monitoring records injuries to crew or other mishaps. These issues must be addressed, and policies and procedures for the disposition of electronic images must be established before NMFS can proceed with full implementation of a video monitoring program. However, the potential for application of this technology to enhance current monitoring capabilities warrants its continued testing and application in U.S. fisheries.

4.3.3 Digital Observers

Digital observer technology takes the use of video cameras for monitoring fishing activities one step further to using a digital scanner to record images of individual fish for electronic species identification and for length/frequency estimates. The scanner records several images of a fish as it passes through the scanner on a conveyor belt, and uses the best of these images to make its predictions and calculations. The primary developer of this technology is Digital Observer LLC of Kodiak, Alaska, for use in Alaska groundfish fisheries. Although this technology is still in a pilot phase, it appears to be software and hardware intensive. Further testing needs to be done to determine its potential utility for specific fisheries and/or gear types, and associated costs.

4.3.4 Alternate Platforms and Remote Monitoring

In instances when the safety of observers aboard fishing vessels is an issue or when logistics of placing observers aboard fishing vessels is insurmountable, the use of small vessels to observe fishing operations may be an option. Government-owned or leased vessels to observe fishing operations remotely have been employed in a few U.S. fisheries to monitor bycatch. Sampling may target the fishery as a whole, or only those vessels that would otherwise be difficult to sample using an onboard observer.

Alternate platforms and remote monitoring may be considered a form of observer coverage: the only difference being where the observer is deployed and the costs of doing so. Therefore, many of the issues mentioned in Section 4.3.1 also apply here.

Alternate platforms were used in the California drift gillnet fishery from 1993-1995, but were abandoned due to safety concerns, cost, and sampling limitations (Price, et al. 1999). The NEFSC currently is operating an alternate platform observation program to monitor bycatch of sea turtles in the Chesapeake Bay pound net fishery. The sampling design uses a combination of fishery-wide sampling on a regular schedule, with more intensive sampling of problematic nets on a more frequent basis (Michael Tork, NMFS Northeast Fisheries Science Center, pers. comm.).

Alternate platforms were used extensively in monitoring the Kodiak salmon set gillnet fishery in Alaska in 2002 (Amy Van Atten, NMFS Northeast Fisheries Science Center, pers. comm.). Two large chartered vessels (greater than 100 feet) were used to transport observers

from land sites to boats and from boat to boat and to provide housing for observers when necessary. Nine smaller boats (approximately 30 feet), operated by experienced commercial fishermen, were used to observe 10% of the overall effort. In some cases, the smaller boats were also used to transfer observers to commercial skiffs that were tending gear.

The advantages of the smaller boats in this instance were that: (1) observers did not have to depend on the fishermen to pick them up and drop them off; (2) once the behavior of fishermen was better understood, the observer would not have to make prior arrangements with the fishermen, they would just be at the net waiting for them; (3) if one fisherman decided not to fish or if they had mechanical difficulties, the observer had the flexibility to get to the next permit scheduled for coverage; (4) observers did not have to rely on or have to share the fishermen's limited resources; (5) it was easier to keep track of the location of observers; (6) by using their own small boats, observers did not have to judge whether the commercial fishing boat would be safe and safely operated by the fisherman; and (7) the observers had a better view of the fish being picked by being slightly in front of the fishing boat. Disadvantages were that the small boat skippers that have local knowledge of the area and the fishery needed to be hired and properly trained in safety precautions and in sampling procedures. Typically, the best vessel operators were usually retired or ex-commercial fishermen (thus, there may be some perceived conflict of interest). However, using small boats was more costly than just placing observers onboard the commercial boats. Also, small boat operators ran the risk of damaging someone else's fishing gear or affecting their catch by scaring fish (liability concerns).

In general, the use of alternate platforms should be evaluated in fisheries where there are concerns about unsafe vessels or inadequate accommodations, or where it is more efficient to observe fishing operations remotely due to the nature of the fishery. However, it should be noted that there may be similar safety and cost concerns whether observers are deployed on alternate platforms or on fishing vessels.

4.4 Stranding Networks

“Strandings” is the term used to describe when marine mammals or sea turtles swim or float into shore and become "beached" or stuck in shallow water. Stranding “networks” have been established throughout the country to monitor the rate of strandings on beaches and to facilitate communication and reporting of stranding events. Typically, sampling is opportunistic and is dependent on the frequency of strandings in an area, the frequency of beach monitoring by network volunteers or others to report stranding events, the availability of network volunteers to respond to a stranding event, and the experience and training of network volunteers.

Marine mammal or sea turtle stranding networks have been established in all U.S. coastal states, and are authorized through Letters of Authority from NMFS regional offices. Many are supported by federal funds to assist in the provisioning of sampling equipment to network volunteers, to provide training in necropsy methods and sampling and archival procedures, and for timely entry and analysis of stranding data.

Marine mammal stranding networks in the United States make up one facet of a broader, more comprehensive program called the Marine Mammal Health and Stranding Response Program (MMHSRP), established in the late 1980s in response to growing concern about marine mammals washing ashore in U.S. waters. The MMHSRP goals are to: facilitate collection and dissemination of data; assess health trends in marine mammals; correlate health with available data on physical, chemical, environmental, and biological parameters; and coordinate effective responses to unusual mortality events. More information on the MMHSRP can be found at: http://www.nmfs.noaa.gov/strandings.htm.

Only a small proportion of the animals that strand can be reliably attributed to fishing interactions, and fewer still can be attributed to specific fisheries. Hohn and Martone (2001) noted that: (1) from 1997-2000, 424 bottlenose dolphins were reported stranded in North Carolina; (2) for 95 of those, it was determined that cause of death was due to interaction with a fishery (on most of these carcasses line or net marks were detected); (3) for the majority of strandings (n=238), it was not possible to determine whether the mortality was human-caused; and (4) only 73 strandings were attributed to natural mortality. Therefore, more of the standings were determined to be due to fishery interactions than due to natural causes. Similarly, in a sample of 66 stranded harbor porpoise recovered from the mid-Atlantic from 1993-1995, 21 had signs of entanglement in fishing gear. Further analyses for the Bottlenose Dolphin Take Reduction Team by Hohn et al. (2001) determined that fisheries interactions in particular could be attributed to 24 of the 605 bottlenose dolphins reported stranded along the Atlantic coast or in the estuaries of South Carolina, Georgia, and Florida. However, for the majority of strandings (63%), it was not possible to determine whether the mortality was human-caused. This prompted recommendations by the Bottlenose Dolphin Take Reduction Team to increase observer coverage in Southeast and Mid-Atlantic fisheries to verify the level of fishing-related mortality and the specific fisheries and gear types responsible.

Similar efforts have been made to determine the relationship between sea turtle strandings and fishing operations. Epperly et al. (1996) compared the number of sea turtles stranded on beaches in the vicinity of Cape Hatteras to the estimated number taken in the winter trawl fishery for summer flounder from November 1991 to February 1992. They found that stranded sea turtles represented a maximum of 7–13% of the estimated fishery-induced mortalities. This suggests that not all turtles that died as a result of fishing operations washed ashore and are included in the standings data, due to such factors as distance from shore at the time of interaction, currents, weather, and the frequency with which beaches are monitored for stranding events. This highlights the limits to using stranding data as a sole indicator of fishing-related mortality, and as a means of estimating bycatch.

Stranding events can nevertheless be used to drive management actions. For example, an increase in strandings annually in waters off Virginia in May and June prompted a pilot study to investigate the occurrence and entanglement of sea turtles in pound net gear. The data from this and other small-scale studies, as well as inferences from strandings data, eventually led to the issuance of mesh size restrictions for pound net leader lines in the Chesapeake Bay (67 FR 41196, June 17, 2002). These restrictions were followed by a prohibition on the use of certain pound net leaders from May 6 to July 15 each year in Virginia waters of the Chesapeake Bay (69 FR 24997, May 4, 2005). In February 2003, NMFS issued regulations to require larger openings on turtle excluder devices (TEDs) to ensure that leatherback turtles, as well as larger loggerheads and green turtles, could escape. The impetus for the larger opening requirements was based in part on new information showing that 33–47% of stranded loggerheads and 1–7% of stranded green turtles are too large to fit through the current TED openings (68 FR 8456, Feb. 21, 2003).

In summary, the use of stranding data can provide indications of where fishing-related mortality may be occurring and direct further observations, but should not be the sole source of information used to make management decisions.

4.5 Summary

At-sea observations of fishing operations, fishery-independent data collection, logbooks, landings reports, port samplers, and stranding networks all may be used to obtain data to estimate bycatch. Each has specific advantages and disadvantages. Data collected from at-sea observation programs (which usually are observer programs) provide better estimates of bycatch rates than do data from either fishery-independent surveys or self-reporting. Combined with reliable estimates of total fishing effort or landed catch, bycatch rate estimate from observation programs can be used to estimate total bycatch levels in a fishery. Sources of bias must be

acknowledged and addressed, and efforts made to limit biases wherever possible. Efforts should be made to increase the safety of observed vessels and to increase the cost-effectiveness of observers in order to increase the viability of observer programs as a management tool. Stability in observation program funding is also needed.

Where possible, analyses should be undertaken to compare logbook data to data from at-sea observations. Self-reporting in logbooks can be a useful adjunct to at-sea observation programs, but these should be subject to ground-truthing periodically. Typically, relying solely on self-reporting of bycatch will result in poor information on which to base management decisions.

Better information regarding the portion of the fleet without observers, perhaps through the use of electronic monitoring (e.g., digital video cameras or digital observers) and electronic logbooks, would be helpful in improving the estimates of total bycatch. More emphasis should be placed on testing, evaluating, and implementing these technologies to augment, or where appropriate, replace onboard observers. At the same time, NMFS should strive to resolve issues of confidentiality and liability associated with electronic monitoring.

Continual efforts should be made to improve the integration of various fishery-dependent and fishery-independent data sources to ensure these data sets are used effectively in providing an accurate and comprehensive portrayal of what level of bycatch is occurring in each fishery and why. The implementation of the Fisheries Information System (FIS) (NMFS 1998b) is an appropriate mechanism for providing the framework for a more integrated and coordinated system to increase the accessibility and sharing of data. The FIS's mission is to create an umbrella program that coordinates techniques to gather and disseminate data nationally while accounting for the unique characteristics of regional commercial and recreational fisheries. The FIS provides a context for the design, development, and implementation of data collection and data management programs for fishery-dependent statistics nationwide to improve the timeliness and accuracy of data.

Periodic reviews of the monitoring methods employed in each fishery should be implemented to ensure that the proper methods are being used to estimate bycatch, taking into consideration the known or expected level of bycatch, the nature of the bycatch, the fishery-specific characteristics of the fishermen and their fishing vessels, and the need to obtain precise and accurate estimates of bycatch.

5. Estimation of Bycatch

5.1 Definition of Bycatch and Precision

Bycatch for the purposes of this report is defined as the discarded catch of any living marine resource plus unobserved mortality due to a direct encounter with fishing gear. As mentioned in the Introduction, this definition is based on the bycatch definition that appears in *Managing the Nation's Bycatch* (NMFS 1998a), but it does not include retained incidental catch as a component of bycatch.

Unobserved mortality due either to direct encounters with fishing gear before it is retrieved or to mortality resulting from lost or abandoned gear is not easily estimated. With the exception of the case in which discard mortality rates are known to be very close to 100%, it is also difficult to estimate the mortality associated with fish or other species that are discarded at sea. If estimates can be made, the typical method is to multiply the number of discards (or encounters) by a rate of post-encounter mortality (by appropriate strata). Monitoring procedures are designed to determine the number of discards, but additional experiments are needed to determine post-release survival rates, encounter rates that do not result in catch, and the survival rates after such encounters. The experiments include such studies as: *in situ* survival experiments in traps; tagging of discarded fish to compare tag-return rates from fish released using standard fishery practices versus those released using experimental procedures; underwater observation; and electronic tagging and tracking. For example, a post-hooking survival study conducted as part of the experiments in the North Atlantic to evaluate sea turtle mitigation measures in the distant waters, pelagic longline fishery provided helpful data on the fate of hooked turtles. Estimates of post-encounter mortality are virtually always inferred from experimental programs. Therefore, a scientific effort that is qualitatively different from bycatch monitoring is required.

In this report, the discussion of bycatch precision will relate only to the discard portion of the bycatch because unobserved mortality cannot be determined using a catch or discard monitoring program. In addition, the discussion is focused principally on bycatch in commercial fisheries because total catch, including landed and discarded catch for most recreational fisheries, is estimated from statistical surveys in which precision is an important design component.

Furthermore, when the notion of "precision" is discussed in this document, we are generally referring to the extent to which bycatch estimates are likely to vary in repeated sampling. More specifically, our standard measure of precision will be the *coefficient of variation,* which is given by the ratio of the square root of the variance of the bycatch estimate (i.e., the standard error) to the estimate, itself. By using this measure, one is able to compare the variances of distributions that have large differences in their means or units of measurement. For example, a coefficient of variation (CV) of 30% implies that the size of the standard error is 30% as large as the estimate. Smaller coefficients of variation indicate greater precision: a 0% CV means that there is no variance in the sampling distribution, and thus no estimation error if the estimator is unbiased. Alternatively, CVs of 100% or greater have poor precision with the standard errors being equal to or larger than the estimate. In fisheries surveys, CVs of 20-50% for estimates of abundance of a stock are the norm for the dominant commercial species. However, the survey CVs for some commercially important species and for many non-target species can be considerably higher. In addition, a bycatch estimate with a CV of 20-30% may provide a very tight estimate in absolute terms or relative to other sources of fishing mortality when bycatch is small.

The variance of an estimate depends upon the underlying variation of the biological and fisheries processes and the number of data points or observations used in making an estimate (denoted by the sample size, *n*). For example as noted above, for large samples the precision (CV) of an estimate is inversely proportional to the square root of the size of a sample. Since larger sample sizes usually imply larger survey costs, this demonstrates that reductions in the CV will require additions to both sample size and budgets – an important planning consideration. Often, it will be desirable to partition the observations into strata that are relatively homogeneous. Such strata will often be defined by the distribution patterns of the species caught and the patterns of fishing effort in space and time. They will also often involve partitioning by gear type and season. If it is possible to define strata with homogeneous characteristics, the precision of the estimates within strata will be higher and the overall CV will be lower. Changes in the sample size within strata will also affect the CV. In general, it will be desirable to increase the sample size in strata with higher variability.

Additionally, it should be noted that in this report the precision to be discussed will be that related to *annual* estimates of bycatch, not seasonal or monthly estimates. This focus was chosen because the requirements for within-year precision are much more data and logistically demanding, and because, at a minimum, effective bycatch monitoring and management require estimates on an annual basis. Accordingly, the focus of the discussion will be on the CV of annual estimates of discards and the sample sizes associated with annual estimates of discards with varying levels of precision. However, there are instances in which the management needs are more rigorous, especially when more detailed estimates are needed to determine how to reduce bycatch and how far to reduce it. In those instances, the CVs of bycatch estimates for specific areas and time periods may be relevant. In addition, there are circumstances (such as rare or protected species) where the absolute precision in numbers of animals is more appropriate than the CV of the estimate (see Appendix 4).

5.2 Estimation from At-Sea Observations

Fishery-dependent estimation of at-sea discards involves the observation of fishing activities as they occur on the ocean. Typically, at-sea observation will involve human observers placed on the fishing vessel or on an alternate platform. However, as noted in Section 4, technologies other than observers may exist to obtain the at-sea observations. From the standpoint of estimation and sampling design, it does not matter how the observation is made; what matters is the measurement reliability and the cost of that observation. We recognize that in most cases under current technology, human observers will be the most effective method of obtaining at-sea observations. However in this report we will often refer to *observations*, to emphasize that observations may be obtained in a variety of ways other than with human observers.

The development of a sampling strategy for estimation of bycatch based on an at-sea observation program entails first clearly defining the objectives of the sampling program and selecting a sampling strategy designed to meet these objectives. Further critical requirements include the specification of the sampling frame from which to draw samples, the sample selection procedures, the designation of sampling strata and allocation strategies, and the identification of appropriate estimators. An explicit statement of the objectives of the program is a critical step in devising effective sampling procedures. For example, an at-sea observer program designed with the objective of estimating fishery discards may be quite different from one designed to assess incidental takes of protected species, particularly if the latter represents rare events. When there are multiple objectives for an observer program, the program design often will need to address competing objectives and the optimal design cannot be determined unless weights have been assigned to the various objectives. Basically, when there are multiple

objectives, it becomes much more difficult to clearly define the objective (including the weights to be used), to identify the appropriate sample design, and to identify the desired level of precision for each estimate.

Ideally, the statement of the objectives of the program will entail not only the identification of the critical bycatch issues for the program (e.g., fishery discards and the incidental take of protected species), but also the desired level of precision for the estimates. The latter will entail consideration of the acceptable level of risk associated with uncertainty in the bycatch estimates and the cost of improving precision.

The specification of a probability-based sample selection scheme, while difficult under some circumstances in at-sea programs, is a critical step in avoiding potential biases that can develop with non-representative sampling based on *ad hoc* sample selection. The selection of sampling strata for each fishery is essential both in distributing the sampling effort over relevant spatial and temporal domains and in increasing precision of the estimates when relatively homogeneous strata can be defined. The choice of allocation strategies for sampling effort among strata will depend in part on the state of development of the sampling program. The choice of estimators for bycatch and its variance will depend on the nature of the available information and the objectives of analysis but will often involve some form of a ratio estimator where information on total landed catch and/or effort is used as an auxiliary variable. For situations in which each haul of the gear cannot be observed, it will be further necessary to select hauls within fishing trips to sample according to a specified probability sampling scheme. Finally, either when additional biological samples are to be collected to evaluate certain factors (e.g., the collection of size composition data and the collection of structures for age determination), or when it is not feasible to sample the entire haul, strategies for the selection of a subsample will be required. Each of these issues is described in further detail below (see also Figure 3).

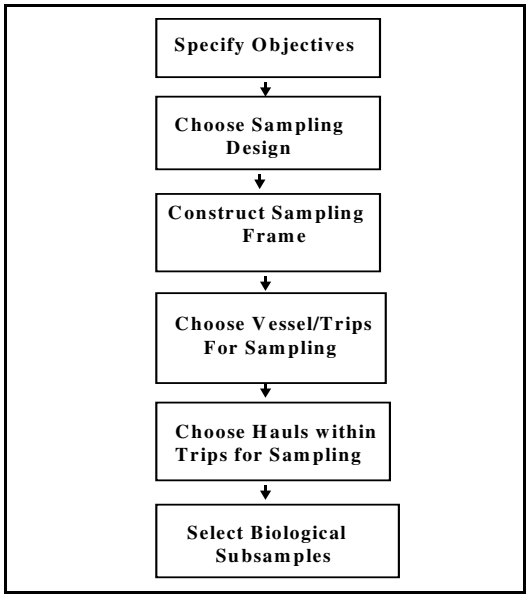

Figure 3. Steps in developing a sampling strategy to estimate bycatch using at-sea observations

There are several distinct stages and steps in the evolution of an at-sea sampling program. The initial step in fisheries for which no at-sea coverage has been attempted is the establishment of a program to collect baseline information on the fishery and fishing practices used therein with particular emphasis on bycatch rates and factors affecting bycatch (Table 3). Typically this will involve the establishment of initial strata defined by time and area (see below) and the deployment of observers or other observation systems within each spatial and temporal unit. Because this is an exploratory effort, it is likely that a uniform allocation of sampling effort among strata will be useful unless ancillary information is available to guide more targeted sampling. The baseline study can be viewed as a preliminary pilot program. We recognize that a more intensive pilot study will often follow the baseline phase (or may be implemented directly in instances where no existing observer coverage has been deployed but where sufficient auxiliary information exists to develop a more detailed sampling program). It is anticipated that a full pilot program will permit refined estimates of variance as the basis for developing an enhanced sampling strategy. We

Table 3. Developmental levels (stages) for observation programs.

Observer Program Level	Definition
None	No *systematic* program exists for bycatch data collection
Baseline	An initial effort including at-sea monitoring to assess whether a systematic program is needed to estimate bycatch is completed.
Pilot	An at-sea monitoring program that obtains information from relevant strata (time, area, gear) for design of a systematic program to estimate bycatch with the ability to calculate variance estimates has been done.
Developing	A program in which an established stratification design has been implemented and alternative allocation schemes are being evaluated to optimize sample allocations by strata to achieve the recommended goals of precision of bycatch estimates for the major species of concern.
Mature	A program in which some form of an optimal sampling allocation scheme has been implemented. The program is flexible enough to achieve the recommended goals of precision of bycatch estimates for the major species of concern considering changes in the fishery over time.

identify a developing program as one in which a well-defined stratification scheme has been established based on known fishery characteristics and where an evaluation of alternative strategies has been made to develop an optimal allocation scheme to provide the highest possible precision and accuracy for a given observation program budget. Finally, we identify a mature sampling program as one in which an optimal allocation scheme has been implemented and the target levels of precision are being met for the species of major concern.

The developmental levels of observation programs as defined in Table 3 were used to classify the progress each fishery is making toward bycatch monitoring goals (see Section 6).

5.2.1 Sample Selection

The development of a sampling frame is a critical first step in the selection of samples in any observer program. The importance of establishing a well-defined probability sampling scheme cannot be overemphasized. Although an ad hoc sample selection procedure potentially can provide valid results, it generally will be impossible to ensure the estimates are free of biases due to non-representative sampling. The development of a probability-based sampling scheme requires definition of the units available for sampling. In most instances, this will involve a sampling frame comprising the vessels actively engaged in the fishery. Following the designation of sampling strata and decisions concerning the allocation of samples within strata (described below), a random sample is drawn from the list of vessels operating within the spatial and temporal units defined. It is recognized that differing degrees of cooperation and willingness to accommodate observers are often encountered. In addition, it may not be possible to make a trip on a selected vessel because the vessel may not be operating during the specified time periods due to maintenance schedules or other considerations. Accordingly, it will be necessary to draw samples randomly until the target sampling levels within strata are attained. The procedure would involve randomly selecting vessels to be sampled, contacting the vessel owner or captain to ascertain whether a trip will be made within the specified time frame and whether an observer can be accommodated, and continuing until the number of trips designated for that

stratum meets the target levels. If necessary, fishermen should be reminded of requirements in the MSA and MMPA to accommodate observers when requested unless justifiable extenuating circumstances exist. Such emphasis should reduce difficulties and potential biases introduced by non-cooperation of different vessel owners or captains. However, observer bias, or the observer effect, would still be a factor under the random selection of vessels for a single trip, or several trips, especially if this sample represents a small portion of the vessel's total trips. If the captain has an incentive to have bycatch underestimated, the estimate can have a substantial negative bias.

The considerations above pertain to cases in which an attempt is being made to sample fishing trips as the unit of observation. Vessels are chosen randomly to meet the goal of sampling a specified number of trips. In some cases, a vessel itself might be of direct interest because of requirements attached to fishing permits, as in some Alaska fisheries. In this case, a random choice of the trips to be sampled for each vessel is desirable and again, the potential for bias will be minimized if timing of sampling trips aboard particular vessels is not left to the discretion of the vessel owner or captain.

For cases in which all hauls cannot be observed during a fishing trip, a sample scheme for selecting hauls will be necessary. Given an initial estimate of how many hauls will be made during the trip, several approaches are possible. A systematic sample with random start points can be employed in which a choice of which haul to sample initially is randomly made and then every n^{th} haul is sampled thereafter. For example, if it is anticipated that every other haul could be sampled, a random draw could be made of the first three hauls and then alternate hauls sampled. However, if the expectation is that fishing practices differ when the crew know that a haul will be sampled, systematically choosing alternative hauls may introduce bias. Consideration of factors potentially affecting bycatch should enter into the decision of how to distribute the sampling. For example, it may be desirable to sample throughout the day and night periods to avoid biases that would result from differential bycatch rates by diurnal period in a fishery that operates on a 24-hour basis. In this case, consideration of the haul time and duration between hauls will be critical.

An alternative strategy is to make an initial random selection to determine which hauls to sample for the duration of the trip (taking care to select more than the expected number of hauls), possibly stratified by time of day. Although this design allows for the spacing of sampling by observers to allow adequate sample processing, rest periods, and other factors, this design may be less desirable than some form of systematic sampling.

Selection of a sub-sample of a haul either for biological information such as size composition or when it is not feasible to sample the entire haul will depend on the operational procedures onboard the vessel. For example, when the catch is placed on a conveyor belt system for culling, observers can readily select samples randomly from throughout the entire catch to avoid potential biases associated with clustering of individuals with similar characteristics (e.g., size) in different portions of the catch. If sorting and culling is done directly on deck, it will be desirable to select samples randomly from different portions of the catch and to do so before sorting and culling occur.

There are often difficulties in implementing these procedures. For example, if the list of active vessels is stable, selecting vessels using a probability sampling scheme is reasonable. But if not, this may mean that a two-stage sampling design is required with the vessel as the primary sampling unit and trip as the secondary sampling unit. If vessels are selected with equal probability and an equal number of trips are selected with equal probability for each selected vessel, trips from different vessels will have different probabilities of being selected, unless all

vessels do the same number of trips. If the specified time period is short enough that a vessel makes, at most, one trip during the time period, then trips are selected with equal probability. However, if several vessels depart about the same time, there might not be a sufficient number of observers to place one onboard each vessel. If selected trips are determined when an observer is available, trips may have an unequal probability of being sampled. Furthermore, each time period needs to be treated as a stratum since randomization is restricted within the time period. Thus, while it is easy to recommend an equal probability sample, it can be very difficult to obtain.

5.2.2 Sampling Strata

Spatial and temporal variation in bycatch levels will typically dictate the use of area-time designations for sampling strata in observer programs. In instances where the fishery involves multiple gear types and fishing strategies, it will be more important to employ appropriate strata for each gear type and fishing strategy. The specification of geographical strata will often be linked to predefined statistical areas used for assessment purposes for the stocks under consideration. Under some circumstances, these area designations will also be linked to ports in which observers are stationed and from which vessels depart to fish in particular statistical areas. The choice of strata should entail consideration of defining relatively homogeneous sampling units with respect to the occurrence of bycatch. Under certain conditions, there may be a need for post-stratification evaluation. However, caution is needed because post stratification often leads to very biased estimates with purportedly small standard errors. In some instances, a reevaluation of the stratification will be needed. In the Northwest, depth strata cannot be predefined because different tows of a trip are operating in several depth strata. The depth is a primary factor of distribution of some species. This situation will pose difficulty for sample allocation as the fishing depth is not clearly defined *a priori*. The number of strata to be employed also entails consideration of the level of overall sampling effort possible given funding constraints. A large number of strata will typically mean that the sample sizes within strata will be low, resulting in relatively high within-stratum variances; this should be avoided.

The choice of temporal strata will be tailored to the characteristics of the individual fishery. The within-year sampling units will generally be defined at the quarterly level or at finer scales (e.g., monthly or weekly) depending on how the fishery is prosecuted and consideration of the temporal variability in bycatch rates as a function of recruitment and seasonal distribution patterns. Although no generic guidelines can be established to apply to all regions, it is important that the entire fishing season be covered.

5.2.3 Sample Allocation

In the initial stages of observer program development, a uniform allocation of sampling effort likely will be necessary to permit specification of the fishery bycatch characteristics. Sample sizes would be equal for each stratum in this phase for baseline studies and potentially for pilot study programs unless additional information to guide allocation strategies is available.

In instances where more detailed information on the fishery is available in terms of fishing effort, catch, and/or bycatch, alternative allocation strategies can be considered. For example, allocating sampling effort to strata in proportion to the fishing effort or overall catch within these spatial and temporal units can be an effective strategy since discards can be expected to vary in proportion to total catch and/or effort. This can be particularly effective where the variability in bycatch increases as the bycatch level increases as will often be the case.

An optimum allocation scheme would entail identification of strata within which high variability in bycatch occurs and placing additional sampling effort in these strata to minimize

the variance for a specified funding level. Because different strata may exhibit higher levels of variability over time, it can be expected that an optimum allocation scheme would have to be adjusted to meet existing conditions. Typically, a specified budget level is comprised of fixed costs (e.g., administrative costs, data management and analytical services) and variable costs related to at-sea operations. The allocation of sampling units to strata is made in a way that minimizes the overall variance given constraints on these costs and the need to address sources of bias.

For multispecies fisheries or when the bycatch includes fish and other living marine resources, in general it will be impossible to specify a bycatch sampling plan that will be optimal for each of the species caught. In this report we have focused on optimizing the sampling design for the total bycatch of fish and the bycatch by species of protected species (e.g., marine mammals and ESA-listed species). However, it is recognized that it may be necessary to concentrate on particular species to meet identified management and conservation goals. This may require targeted supplemental sampling to meet needs for overfished species or protected species.

5.2.4 Estimators

As noted above, funding limitations, observer program costs, safety considerations, and logistical constraints typically result in it being neither physically nor economically feasible to monitor all fishing effort, catch and bycatch and to do so without measurement error. Therefore, a way of estimating the bycatch for some representative portion of the fishery must be obtained and this result then expanded to the fishery as a whole to estimate the total bycatch. In most cases, this is accomplished by measuring the bycatch in relation to some easily and reliably measured factor for the fishery as a whole.

The two factors that have been used most often as 'auxiliary' variables in estimating bycatch are the retained (landed) portion of the catch and the amount of fishing effort. For example, if we choose a unit of observation (say a fishing trip) and directly measure the amount discarded and the amount landed of one or more species on a number of representative fishing trips, we have a way of estimating the total bycatch using information on the observed trips and the total landed catch from the fishery. For the observed trips, we can take the amount discarded and divide this by the amount landed to form a ratio. We then have an estimate of the amount discarded per unit of landed catch. If we then multiply this ratio by the total landed catch for the fishery, we can generate an estimate of the total amount discarded. Alternatively, we could use the fishing effort (say number of hours towed or number of traps set adjusted for fishing time) as the auxiliary variable if we have an estimate of the total effort for the fishery.

In recognition of the fact that bycatch can vary considerably by fishery sector, time period, and area, the fishery is often partitioned (or stratified) by these factors. Stratification of this type can be an important factor in increasing the precision of estimates of bycatch. In this case, the estimates of bycatch would be computed at the stratum level and then summed over strata to obtain the totals. Special considerations hold for estimating the bycatch of non-target species. For bycatch of protected species, the ratio of the number of individuals of the protected species to the landed portion of the targeted catch or the amount of fishing effort is often used.

The choice of the appropriate sampling unit (e.g., haul or trip) will be dictated by logistical considerations and an evaluation of the statistical properties of the observations. In instances where the bycatch rates are not independent among hauls within a fishing trip, it may be desirable to consider the trip as the unit of observation. For example, we may commonly encounter situations where the bycatch of a particular species is consistently high during a fishing

trip and the bycatch among hauls would not be independent. This creates statistical problems because the effective sample size that we have to work with may be much smaller as a result of this lack of independence. In effect, under these conditions, each haul is repeating the same information instead of providing entirely new information. We therefore need to take this directly into account or use the trip as a whole as a unit of observation.

Often, estimates of the bycatch using the ratio estimator approach above are made on a species by species basis (e.g., the ratio of the discarded to the landed portion of the catch for the species is determined and multiplied by the total catch for that species to get the total amount discarded). However, we might as easily estimate the total amount discarded over all species using a ratio estimator in one stage and then estimate the proportion of each species contributing to the total bycatch in a separate stage. The bycatch for each species is then given by the product of the total bycatch and the proportion of each species contributing to the bycatch.

Estimation of rare events presents special challenges. For example, if sampling bycatch of certain threatened or endangered species is a primary goal, sampling designs specifically developed for estimating the occurrence of rare events may be required. It is possible that quite large sample sizes will be required to obtain sufficiently large effective sample sizes to detect rare events and to develop unbiased estimates of the bycatch. If the rare events exhibit some form of clustering in space and time, it may be effective to utilize an adaptive sampling design in which once an event is detected, additional samples are allocated in the region surrounding the observed event as quickly as possible. However, the potential advantages and disadvantages of an adaptive sampling design need to be considered. If the chance of such an event can be predicted based on previous occurrences at specified times and locations, the initial sampling effort can be allocated accordingly with additional sampling effort deployed in temporal and spatial proximity to any observed events.

The statistical properties of ratio estimators and the assumption underlying the method must be carefully considered. In the following, we will distinguish between 'structural' bias that may result from non-representative sampling (including the observer effect described above) and 'statistical' bias that results from the characteristics of the estimators themselves. We have implicitly assumed that each unit of observation (say a fishing trip) has an equal probability of being selected for sampling. This is not a reasonable assumption for all observer programs. Making this assumption when it is false will likely result in a structural bias and underscores the importance of obtaining representative samples that reflect the fishery as fully as possible. As noted earlier, in observer programs, every attempt should be made to obtain random samples from the fishery and to check for possible observer effects reflecting changes in fishing practices when observers are on board the vessel.

The ratio estimator also assumes that there is a simple linear relationship between the 'response' variable (bycatch) and an auxiliary variable such as the landed portion of the catch. When sample sizes are low, ratio estimators can be statistically biased. Ensuring adequate sample sizes in each stratum (e.g., a particular gear, area, and time combination) is important. Usually, at least 20-30 samples (e.g., trips or other units of observation) per stratum would be desirable. The statistical bias in ratio estimates can also be estimated (and corrected) using resampling methods such as the bootstrap technique (for an application to salmon bycatch, see Turnock and Karp 1997). In this method, we would repeatedly take a large number of random sub-samples by computer from a set of observed fishing trips and determine the bycatch ratio and the sampling distribution of these estimates.

5.2.5 Sample Size Requirements

The sample size required to achieve a desired CV for the bycatch estimate can be specified given an initial estimate of the sample variance based on a pilot study or previous bycatch sampling. Given an appropriate stratification scheme in which the bycatch is as consistent as possible within strata, the key issue is how to distribute the available sampling effort among the strata. Often, we are interested in obtaining the most precise estimate possible under a given cost constraint. The optimum allocation of samples will depend on the variability in each stratum, the cost of obtaining samples for each stratum, and the bycatch level for each stratum (often based on a previous estimate). In general, we will want to put higher sampling effort in strata where the bycatch is most variable to reduce the overall variance. We also wish to ensure that the sample size is sufficiently large that 'statistical' bias is not a problem and that we can test other assumptions such as a linear relationship between the bycatch and the auxiliary variable. In some instances, the 'structural' bias resulting from the observer effect can be reduced either by increasing sample size or by changing the distribution of sample sizes.

5.2.6 Accuracy and Bias

The discussion of sampling design has primarily addressed precision, that is, the amount of random error that occurs in estimates due to the variability among observations. However, accuracy is also a concern, specifically, are the vessels and hauls that are being observed representative of those that are not? Issues related to representativeness, bias and accuracy were discussed in Section 4.3.1.3 Accuracy and Bias in Observer Programs. Accuracy is difficult to address in statistical designs of observation programs. The act of observation often alters behavior and there is not a clear-cut way of determining whether the changes in behavior are significant. Therefore, indirect methods of comparison should be instituted where possible. For example, the areas, times and catch of target species sometimes may be compared between observed and unobserved vessels to determine if fishing operations are statistically similar (for example, Walsh et al. 2002). This kind of verification check should be made periodically.

5.3 Precision of Bycatch Estimates

Precision requirements for bycatch estimates depend upon the management procedures for which the estimates are being used. Additionally, there are a number of issues about statistical sampling that impede our ability to obtain precise estimates. In this section the issues relating to precision are discussed and recommendations for precision goals are presented and discussed.

5.3.1 Management Uses of Bycatch Estimates

The precision requirements for bycatch estimates depend upon the management uses to which the estimates are being put. What are managers doing with the bycatch estimates?

Typically there are three primary uses for bycatch estimates. One use is when the estimates of bycatch of a particular species are incorporated into the analyses by which the status of that species or resource is being evaluated, (i.e., into the stock assessment). A second use is for direct management purposes, such as determining either if bycatch has exceeded a bycatch quota or when it will exceed the quota. A third use is to utilize bycatch estimates in order to guide management on actions that might be taken to mitigate bycatch.

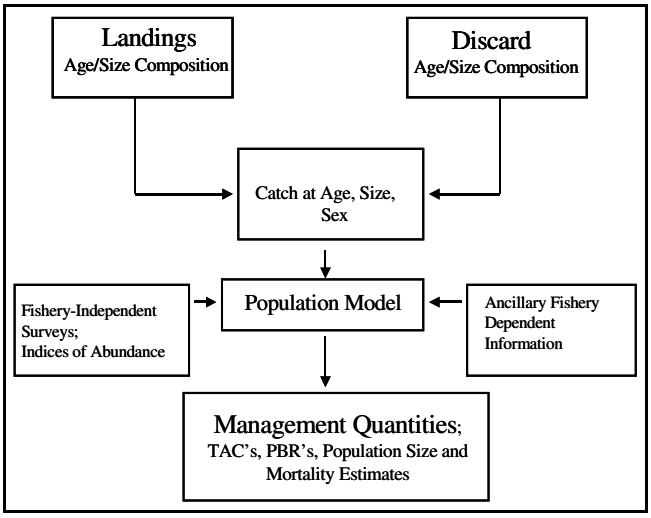

Figure 4. Schematic diagram of a stock assessment with inputs of relevant data (including bycatch) and outputs of management quantities.

5.3.1.1 Assessment Uses

An assessment of a population or stock of a living marine resource results in estimates of management-related quantities (e.g., total allowable catches (TACs) for fishery resources, potential biological removals (PBRs) for marine mammals, incidental take statements for endangered species). Uncertainty in a stock assessment and in the resulting estimates of management-related quantities will depend upon a number of factors. Contributions to the uncertainty in a species' TAC or PBR include: (1) the magnitude and precision of the bycatch estimates of that species; (2) the magnitude and precision of the estimates of other sources of mortality (directed catch, natural mortality); (3) the precision of the estimates of survey indices or direct estimates of abundance; (4) the precision of the estimates of the biological distribution of the species (for example, age and sex distribution and spatial-temporal distribution); and (5) the status of the resource relative to the management quantities. Figure 4 shows the structure of a general stock assessment. Thus, the precision of bycatch estimates may not be the limiting factor in the precision of estimates of TACs or PBRs. Often other factors are more important. Exceptions occur when the bycatch is large relative to the overall catch of that stock. The relationship between the precision of the assessment components (including the precision of the bycatch estimate) and the precision of management quantities such as TACs or PBRs is addressed in Appendix 2.

Generally, one wishes to increase the precision for all components of an assessment of a stock, not just for the bycatch of that stock. Additionally, one would invest more heavily in activities that would more efficiently reduce uncertainty in the management quantities, and that may or may not be the bycatch component (Powers and Restrepo 1993). Nevertheless, we strive to obtain a balance in which estimates of management quantities are reasonably precise (Fogarty and Gabriel, unpub. ms.). The Atlantic States Marine Fisheries Commission (ASMFC) (1997) recommended that precision of the estimates of bycatch of a stock be in the order of a 20-30% CV, recognizing the importance of the various assessment components.

5.3.1.2 Monitoring Relative to Management Standards

A second management use of bycatch estimates is direct comparison of the estimate with some management standard, such as the PBR for a marine mammal stock (Barlow 1999), or with other sources of mortality,. An example of a management standard might be some upper limit on bycatch that managers are trying to avoid exceeding. Thus, the precision of the bycatch estimate directly relates to the probability that the *true* bycatch level (not the *estimated* level) is or is not below the limit. An example of a comparison with another source of mortality might be when allocations of a TAC are being made between the catch and bycatch of a species; and in that case, the precision of both the bycatch and the catch directly relate to the probability that one source of catch is larger than the other. In both of these examples, precision relates to straightforward statistical comparisons of bycatch with some standard or other source of mortality. Precision requirements depend upon how sure the manager wants to be that the bycatch is below that standard. A simple rule of thumb is that, if you want to be about 84% sure that the "true"

bycatch level is below some standard, the bycatch estimate must be less than or equal to the standard divided by (CV + 1). For example, if the CV is 0.5, the estimate of bycatch would have to be no more than two-thirds of the standard for one to be about 84% sure that the "true" bycatch level is below the standard. Similarly, if you want to be about 98% sure that the "true" bycatch level is below some standard, then the bycatch estimate must be less than or equal to the standard divided by [(2 x CV) + 1]; with a CV of 0.5, the estimate of bycatch would have to be no more than one half of the standard for one to be about 98% sure that the "true" bycatch level is below the standard. With a CV of 0.2, the estimate of bycatch would have to be no more than 83% or 71% of the standard, respectively, for one to be about 84% or 98% sure that the "true" bycatch level is below the standard. Clearly, with higher precision (lower CVs), one can manage closer to the standard and still be confident of not exceeding management targets. Indeed, that is the goal of efficient statistical designs–to be able to make more efficient and flexible management decisions. Note that these rules of thumb assume that estimates result from normal distributions. More formal analyses would be needed for most comparisons, including those in which there is uncertainty concerning what the value of the management target should be.

5.3.1.3 Developing Mitigation Plans

The third management use of bycatch estimates is to structure a mitigation program (i.e., the estimates are used to design measures to reduce bycatch). For example, bycatch estimates might inform managers whether it is more likely that closing an area will reduce bycatch mortality more or less than requiring a gear modification; or requiring changes in gear deployment versus instituting quotas. From a statistical standpoint, this is the same use of the data as discussed in the previous Section (Section 5.3.1.2 Monitoring Relative to Management Standards). However, the difference is that these decisions are often focused on finer spatial and temporal scales than what is usually used for annual bycatch estimates. The managers may wish to know (and compare) bycatch estimates for one area versus another, or one month versus another. Requirements for finer scales results in requirements for additional sampling in order to maintain comparable precision.

5.3.2 Precision of Bycatch Estimates from Fisheries

The discussion above focuses on the precision of bycatch estimates taken from a single stock of fish or a single stock of a protected resource and the management uses of these estimates. Clearly, there is a need for single-species estimates for use in assessments and for other management needs. However, a single fishery may have bycatch of more than one stock of fish or protected resource, sometimes from many stocks. Therefore from a practical standpoint, often the entire fishery needs to be monitored, not just selected species within the bycatch. Thus, if standards of precision for bycatch estimation are established for the aggregate fish bycatch in a fishery, the relationship between the precision of the estimate of fish bycatch from a fishery (i.e., the bycatch of all fish species or stocks aggregated) and the precision of the estimates of the individual stocks within the bycatch needs to be understood.

When estimating catch or bycatch from fisheries data, survey or observation programs usually are designed to address estimations of the bycatch of multiple species, rather than being designed specifically for the estimate of the bycatch of an individual species. The reasons for this are: (1) more than one species is of concern to managers; (2) the species that are of little concern today may be of great concern in the future; and (3) sampling designs can be more efficient when directed at more than one species. Therefore, observations are often designed to

obtain bycatch estimates of the aggregate of all fish species combined with a specified precision. However, if the bycatch estimate for each species is given by the product of the estimate of total bycatch and the estimate of the proportion of each species contributing to the bycatch, the precision of the bycatch estimate of an individual species will be less, sometimes considerably less, when a species comprises a small percentage of the aggregate (see Figure 5 and Appendix 3). In this case, the precision of bycatch estimates for an individual species deteriorates disproportionally when the proportion is below 10-15%. This is especially so when the aggregate bycatch is small. This suggests that some pragmatism might be required in specifying precision requirements, particularly when there are multiple bycatch species of concern in a fishery.

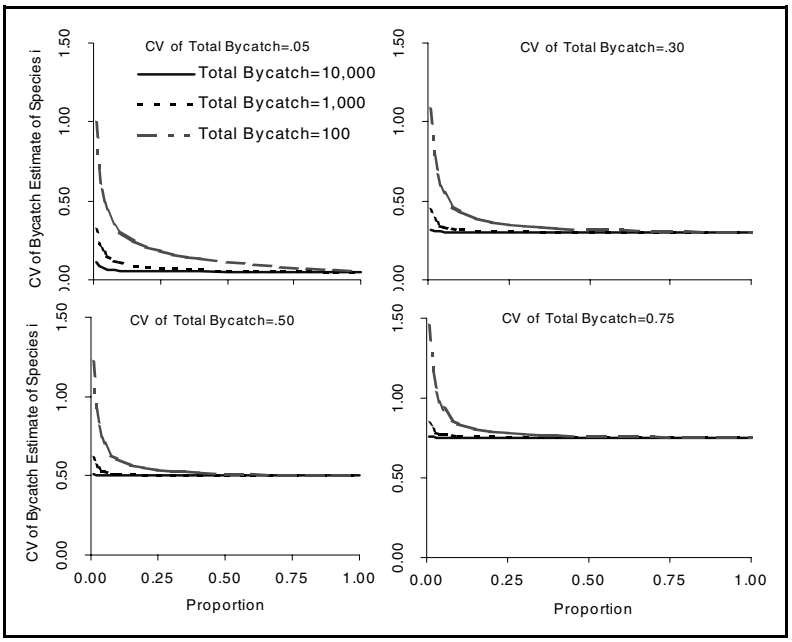

Figure 5. Precision of estimates of bycatch of an individual species (*species I*) as a function of the total bycatch aggregated over all species, the CV of the total aggregate bycatch and the proportion of the total that species *I* represents.

5.4 Precision Goals for Estimating Bycatch from a Fishery

The appropriate precision standards for the estimates of bycatch depend on the management objectives, the management uses of the estimates, the precision of other information used with the bycatch estimates to make management decisions, and the cost of increasing the precision of the bycatch estimates. Ideally, standards of precision would be based on the benefits and costs of increasing precision. More often though, managers specify the available budget for estimating bycatch and then scientists determine the precision that can be achieved for that budget. In either case, the precision will be a function of a number of fishery-specific factors. For these reasons, this report specifies *precision goals*, rather than precision standards.

These CV goals are the levels of precision that NMFS will strive to achieve. However, it is important to recognize that:

- The goals may in some instances exceed minimum statutory requirements.
- There are intermediate steps in increasing precision that may not immediately achieve the goals but that represent progress nonetheless.
- There are circumstances in which higher levels of precision may be desired, particularly when management is needed on fine spatial or temporal scales.
- There are circumstances under which meeting these precision goals would not be an efficient use of public resources.

- Funding and logistical constraints, safety considerations and additional objectives for observer programs may prevent the attainment of these goals.

- When a numeric limit is set for a bycatch species, the uncertainty associated with setting that limit and the methods used for addressing that uncertainty are two of the factors that determine the appropriate CV for the bycatch estimate for that species.

- If CVs of 20-30% for individual fishery species can be obtained and are needed for management, then this precision should be encouraged.

- In some instances decreasing bias (including that caused by the observer effect) will be more important than increasing precision.

- The absolute precision (in numbers of animals) may be more appropriate than the percent precision for some protected species (see Appendix 4 for technical comments on this issue).

- Flexibility is needed when setting CV targets for specific fisheries and bycatch species.

- A decision to accept lower precision should be based on analyses and understanding of the implications of that decision.

If bycatch is being monitored principally in order to manage a fishery within bycatch limits, an alternative to CV goals is to set the bycatch limits based on a management regime that incorporates uncertainty. For example, the management of marine mammal bycatch in commercial fisheries in U.S. waters is based on the product of a conservative estimate of abundance, an estimate of maximum net production, and a recovery factor. The product of these three parameters is referred to as the Potential Biological Removal (PBR) level. The estimate of abundance for a given stock is based on the 20th percentile of the distribution for abundance. This value was selected based on the results of computer simulations that indicated such an approach would meet specific management objectives. In this case, as the CV of the estimate increases, the limit on bycatch for the marine mammal species of interest decreases in a predictable manner. Therefore, managers can determine the costs and benefits associated with various levels of the CVs on both the abundance estimate and the bycatch estimate and allocate funding appropriately to improve either or both estimates.

The precision of bycatch estimates for protected species is often not the most important factor in determining the precision of an assessment of that protected species or stock. The reason for this is that often the absolute magnitude of the take of that species is small. Thus, assessments often are driven more by the precision of abundance surveys or population estimates and associated information than by that of bycatch. However, the evaluation of bycatch relative to allowable takes is important in the management of protected species (Barlow 1999). Precision goals for protected species should emphasize this aspect of management. Precision of 20-30% CVs on the bycatch of many protected species or stocks would mean that managers would know that the bycatch estimate reflects the actual bycatch occurrence with a reasonably high probability. However, as noted above, the absolute precision (in numbers of animals) may be more appropriate than the percent precision for protected species for which the allowable take is very few animals.

Precision goals for the bycatch of the *fishery resources* (excluding protected species) within a fishery should recognize that often there are a number of species within the aggregate bycatch. If the precision of the aggregate has a CV of 20-30%, then the CV of an individual species within that aggregate will have a comparable CV unless the aggregate is small and the proportion of the total that that species represents is also small (see Figure 5 and Appendix 3). However, as noted above, the precision of bycatch estimates for an individual species deteriorates disproportionately when a species accounts for less than 10-15% of the total bycatch. The deterioration is more rapid when the aggregate bycatch is small. This means that the bycatch of all but the most abundant species could fall into this category, especially as the number of bycatch species encountered in a fishery increases. If the aggregate and the proportion are sufficiently small, then the bycatch of that species will be on the order of a few animals. If bycatch of a few animals is significant to a population, then that population probably falls within the protected species realm and the CV recommendation for protected species would apply.

The role that bycatch plays in the CV of the management quantities derived from an assessment of a fishery resource can be varied. A CV of 20-30% on a TAC is a useful management goal (Powers and Restrepo 1993). Additionally, the ASMFC recommended a target 20-30% CV for both finfish and protected species (ASMFC 1997). Hence, a 20-30% CV for the bycatch estimate is a useful goal.

Note that in some instances, management is focused on monitoring total catch of a fishery resource of which bycatch is an important component. In this case, the sampling design has been structured to estimate total catch including bycatch. In these situations the precision of the bycatch component is not easily teased out. However, in these instances a goal of 20-30% CV for the total catch including bycatch appears to be sufficient.

Precision Goals for a Fishery

Protected Species

For marine mammals and other protected species, including seabirds and sea turtles, the recommended precision goal is a 20-30% CV for estimates of bycatch for each species/stock taken by a fishery.

Fishery Resources

For fishery resources, excluding protected species, caught as bycatch in a fishery, the recommended precision goal is a 20-30% CV for estimates of total discards (aggregated over all species) for the fishery; or if total catch cannot be divided into discards and retained catch then the goal is a 20-30% CV for estimates of total catch.

5.5 Other Factors That May Affect Observer Coverage Levels

Although the precision goals for estimating bycatch are important factors in determining observer coverage levels, other factors are also considered when determining actual coverage levels. These may result in either lower or higher levels of coverage than that required to achieve the precision goals for bycatch estimates.

Factors that may justify lower coverage levels include lack of adequate funding, incremental coverage costs that are disproportionately high compared to benefits, and logistical

considerations such as lack of adequate accommodations on a vessel, unsafe conditions, and lack of cooperation by fishermen.

Factors that may justify higher coverage levels include incremental coverage benefits that are disproportionately high compared to costs and other management-focused objectives for observer programs. The latter include total catch monitoring, in-season management of total catch or bycatch, monitoring bycatch by species, monitoring compliance with fishing regulations, monitoring requirements associated with the granting of Experimental Fishery Permits, or monitoring the effectiveness of gear modifications or fishing strategies to reduce bycatch. In some cases, management may require one or even two observers to be deployed on every fishing trip. Increased levels of coverage may also be desirable to minimize bias associated with monitoring rare events (such as takes of protected species), or to encourage the introduction of new "standard operating procedures" for the industry that decrease bycatch or increase the ease with which it can be monitored.

6. Status of At-Sea Observation Programs

At-sea observation programs for fishery dependent data include observer programs, electronic monitoring programs (e.g., the use of digital video cameras and digital observers) and a combination of the two. As electronic monitoring technology is improved and as the associated policy issues are addressed, the use of electronic monitoring is expected to increase. Often it will be used to complement observer programs, but in some cases it will be used either as a substitute for an observer program or as a method of expanding at-sea observations for a fishery with an observer program. However, the following survey of observation programs focuses on observer programs because they currently are the principal element of the at-sea observation programs for marine fisheries.

6.1 A Survey of Observation Programs

The National Working Group on Bycatch (NWGB) reviewed U.S. fisheries to determine the level of existing bycatch monitoring. Each fishery was assigned a bycatch monitoring level (i.e., type) classification of: *None, Baseline, Pilot, Developing* or *Mature* as defined in Table 3 (recognizing the precision goals established in Section 5). The level of the bycatch program and other information that is designed to assist in setting priorities for improving observer programs are presented in Tables 4.1-4.6. The additional information includes: (1) the recommended next level in the development of the observer program; (2) an estimate of the number of at-sea observer days needed to achieve the next level (typically estimates were not available if the next level is a developing or mature program); (3) the vulnerability of the fishery to the bycatch of fish (excluding protected species), marine mammals and other protected species, that is, ESA-listed species (excluding marine mammals), other sea turtles and other seabirds. The vulnerability classification are defined and discussed in Section 7.

There should be a clear understanding of the list of fisheries used in Tables 4.1-4.6 and, specifically, the definition of what is meant by the term "fishery". The definition of a fishery is inherently subjective (e.g., which gears are grouped), but in this context a "fishery" would be a logical unit for which a sampling program might be designed. However, this approach results in differences both within and between regions. This should be understood by the reader, particularly when interpreting summary statistics derived from Tables 4.1-4.6. For example, the fisheries of the Southeast (Table 4.2) include a large number of relatively small coastal fisheries, as well as very large fisheries, such as the Gulf of Mexico shrimp trawl fishery. Thus, the implications of having or not having a bycatch monitoring program are clearly different between the Gulf shrimp trawl fishery and smaller coastal fisheries. This imbalance of implications occurs within all regions. To some extent this imbalance is addressed by assigning bycatch "vulnerabilities" to each fishery (this is done in Section 7). However, vulnerability does not address the economic or political factors that one may wish to consider when developing bycatch monitoring programs.

Also, the reader should note that recreational fisheries are *not* included within Tables 4.1-4.6. Most of the private recreational and charterboat fisheries are monitored through the Marine Recreational Fishing Statistics Survey in which estimates of bycatch (discards) are made. Thus, in these recreational fisheries, there currently *is* a bycatch reporting procedure, albeit based on self-reporting (with some of the problems inherent in self-reporting, noted in Section 4).

Additionally, some state fisheries were included either if they were classified as MMPA Category I or Category II fisheries or if there were ESA concerns. Using this procedure, the NWGB examined the status of each fishery. The evaluations in Tables 4.1–4.6 were made by the NWGB in consultation with numerous NMFS experts.

Given the different emphasis placed on the fisheries examined in this report, it is important that the Regional Teams established in the National Bycatch Strategy review their constituent fisheries with the aim of identifying additional state and interstate jurisdictional fisheries and recreational fisheries that might be important for bycatch monitoring. Additional fisheries requiring monitoring are identified in the Regional Bycatch Implementation Plans that can be found at: http://www.nmfs.noaa.gov/bycatch.htm

A total of 84 fisheries were classified in Tables 4.1-4.6. Of these, 5% have a Mature observer program, 20% have a Developing program, 10% have a Pilot program, 29% have a Baseline program, and 37% do not have a program (None). The summary statistics are in Table 5. In considering these summary statistics, it is critical to note the caveats in Section 6.1 about the definition of a "fishery" and that there are differences both within and between regions.

6.2 Enhancement of Observer Programs

6.2.1 Criteria for Enhancing Observer Programs

Section 5 presented a discussion of precision goals. It was noted there that the goals are levels of precision that NMFS strives to achieve, but that for a variety of reasons flexibility is needed when setting CV targets for specific fisheries and bycatch species. Given this understanding, the NWGB used the following procedure for examining options for enhanced observer programs.

The NWGB reviewed each fishery and determined the "next step" of sampling program development needed, that is, moving from None to a Baseline or Pilot program, moving from a Baseline to a Pilot program, moving from a Pilot to a Developing program, and moving from a Developing to Mature program (see Tables 4.1-4.6). In a few instances, it is suggested that the sampling program be maintained (for example, for some Mature sampling programs or for fisheries that are being phased out). The NWGB could not make quantitative, fishery by fishery, sampling recommendations for Pilot, Developing and Mature programs. The data may exist to do this, but the NWGB had neither the time nor expertise for these analyses. Such analyses may be more appropriately undertaken at the regional level. Additionally, Developing or Mature sampling programs imply optimization of sampling which, in turn, depends on budget constraints and precision goals. This sampling plan and optimization process should be done for each of the Developing and Mature sampling programs.

Additionally, initial effort should be made to establish baseline or pilot-level information for every fishery such that statistically rigorous sampling plans can be developed. At this stage, it is not expected that all fisheries will achieve the 20-30% precision goals, but rather that information will become available to both plan for the attainment of those goals and to do it in an efficient manner. The information may be used to identify the cost of achieving the precision goal. In developing quantitative advice for coverage of observer programs, the guidance of the ASMFC's Atlantic Coastal Cooperative Statistics Program (ACCSP) was noted: *observer programs should obtain a minimum of 2% coverage until CVs can be calculated, and then target 20-30% CVs for both finfish and protected species (ASMFC, 1997). The programs should utilize proportional sampling across all gear types and fisheries, recognizing some prioritization as need (statutory requirements) and data (high bycatch areas) dictate.* Recognizing the importance of evaluating sampling programs through intermediate steps, the NWGB suggests the following sampling criteria for each fishery (Table 6).

Table 4.1. Survey of Southwest Region fishery-specific at-sea observer programs, including current program level, recommended enhancements and bycatch vulnerability.

Fishery	Target species	Gears	Program level	Next Level	Sea days needed for next level	Vulnerability by type of bycatch		
						Fish	Marine Mammals	Other protected species
Coastal Pelagic Species (Coastwide)	Pacific sardine northern anchovy pacific mackerel jack mackerel market squid	Purse seine lampara net drum net	None	Pilot	130 days	Low	Moderate	Moderate
Drift Gillnet Fishery	Swordfish, sharks (thresher, mako)	Drift gillnet, large mesh	Mature	Maintain	-	Moderate	Moderate	High
Surface Hook and Line	Albacore	Troll	None	Baseline	420 days	Low	Low	Low
Pelagic Longline	Swordfish, tuna	Single main line	Pilot	Developing	900 days to achieve precision goals	Moderate	Moderate	High
Coastal Purse Seine	Tuna	Purse seine	None	Pilot	15 days	Moderate	Moderate	Moderate
Harpoon	Swordfish	Harpoon	None	Baseline	15 days	Low	Low	Low

The program level (stage) classifications are defined in Table 3. A dash (-) indicates that an estimate of the number of sea days needed for the next level was not available. The vulnerability classification are defined and discussed in Section 7. The other protected species are ESA species (excluding marine mammals), other sea turtles and other seabirds.

Table 4.2 Survey of Southeast Region fishery-specific at-sea observer programs, including current program level, recommended enhancements and bycatch vulnerability.

Fishery	Target species	Gears	Program level	Next Level	Sea days needed for next level	Vulnerability by type of bycatch		
						Fish	Marine Mammals	Other protected species
Gulf of Mexico Reef Fish FMP	42 species in FMP	Bottom longline	Baseline	Pilot	490 days	High	Low	Moderate
South Atlantic Snapper-Grouper FMP	73 species in FMP	Bottom longline	Baseline	Pilot	112 days	High	Low	Moderate
Gulf of Mexico Reef Fish FMP	42 species in FMP	Handline	Baseline	Pilot	1,680 days	High	Low	Moderate
South Atlantic Snapper-Grouper FMP	73 species in FMP	Handline	Baseline	Pilot	1,932 days	High	Low	Moderate
Migratory Coastal Pelagic FMP - Gulf of Mexico	King/Spanish mackerel	Trolling	None	Baseline	168 days	Low	Low	Moderate
Migratory Coastal Pelagic FMP - South Atlantic	King/Spanish mackerel	Trolling	None	Baseline	1,260 days	Low	Low	Moderate
Crab Trap/Pot (Stone Crab Fishery)	Stone crabs	Pot	None	Baseline	350 days	Low	Low	Low
Crab Trap/Pot (Blue Crab Fishery) Gulf of Mexico	Blue crabs	Pot	None	Baseline	2,500 days	Low	Moderate	Low
Crab Trap/Pot (Blue Crab Fishery) South Atlantic	Blue crabs	Pot	None	Baseline	1,200 days	Low	Moderate	Low
Crab Trap/Pot (Golden Crab Fishery)	Golden crab	Pot	None	Baseline	14 days	Low	Low	Low

Table 4.2 (Continued)

Fishery	Target species	Gears	Program level	Next Level	Sea days needed for next level	Vulnerability by type of bycatch		
						Fish	Marine Mammals	Other protected species
Directed Shark Gillnet	Large coastal and small coastal shark aggregates	Drift gillnet/strike gillnet	Mature	Maintain	No change	Moderate	Moderate	Moderate
South Atlantic snapper-grouper FMP	73 species in FMP	Trap	Baseline	Maintain	fishery being phased-out	High	Low	Low
Gulf of Mexico Reef Fish FMP	42 species in FMP	Trap	Baseline	Maintain	fishery being phased-out	High	Low	Low
Lobster Trap	Caribbean spiny lobster	Pot	None	Baseline	230 days	Low	Low	Low
Gulf of Mexico - Shrimp Trawl	Brown, white, pink shrimp	Trawl	Pilot	Developing	8000 days	High	Low	High
Southeastern Atlantic - Shrimp Trawl	Brown, white, pink shrimp; rock shrimp	Trawl	Pilot	Developing	4,000 days	High	Low	Moderate
Fish Trawl (Paired / Single)	Butterfish, squid	Trawl	None	Baseline	50 days	Low	Low	Low
Pelagic Longline Fishery	Tuna, swordfish	Surface longline	Developing	Mature	1,700 days	High	High	High
Surface Trawl	Jellyfish	Trawl	None	Baseline	7 days	Low	Low	Moderate
Inshore Gillnet	Bluefish, Spanish mackerel, weakfish, butterfish, southern flounder, spot, kingfish	Gillnet	Pilot	Developing	820 days	Moderate	Moderate	High

Table 4.2 (Continued)

Fishery	Target species	Gears	Program level	Next Level	Sea days needed for next level	Vulnerability by type of bycatch		
						Fish	Marine Mammals	Other protected species
NC Coastal Gillnet (State and Federal Waters)	Striped bass, monkfish, spot, croaker, bluefish, weakfish, Spanish mackerel, king mackerel, kingfish	Gillnet	Pilot	Developing	117 days	Moderate	High	High
NC Pound-net	Southern flounder	Pound net	Baseline	Pilot	66 days	Low	Moderate	High
Southeastern Atlantic - Flynet	Croaker, weakfish	Trawl	Baseline	Pilot	35 days	Moderate	Low	Moderate
Atlantic Menhaden Purse-Seine Fishery	Atlantic menhaden	Purse seine	None	Baseline	25 days	Low	Low	Low
Gulf Menhaden Purse-Seine Fishery	Gulf menhaden	Purse seine	Baseline	Pilot	226 days	Low	Moderate	Low
Gulf of Mexico - Cast Net (W. Florida)	Shrimp	Cast net	None	None	0 days	Low	Low	Low
Southeastern Atlantic - Cast Net (Florida, Georgia, North Carolina)	Brown, white, pink and other marine shrimp	Cast net	None	None	0 days	Low	Low	Low
Gulf of Mexico - Beam Trawl (Florida-West Coast) NMFS landing data.	Pink shrimp	Beam trawl	Baseline	Baseline	75 days	Low	Low	Low
Gulf of Mexico - Skimmer Trawls	Brown, white, pink, seabob and other marine shrimp	Skimmer trawl	None	Baseline	438 days	Low	Low	Low
Southeastern Atlantic - Skimmer Trawls -	White shrimp	Skimmer trawl	None	Baseline	36 days	Low	Low	Low

Table 4.2 (Continued)

Fishery	Target species	Gears	Program level	Next Level	Sea days needed for next level	Vulnerability by type of bycatch		
						Fish	Marine Mammals	Other protected species
Gulf of Mexico (All States) - Butterfly Nets	Brown, white, pink, seabob and other marine shrimp	Butterfly net	None	Baseline	51 days	Low	Low	Low
Southeastern Atlantic (NC, E FL) - Butterfly Nets	Brown, pink and other marine shrimp	Butterfly net	None	Baseline	6 days	Low	Low	Low
NC Haul/Beach Seine	Striped bass, weakfish, spot, striped mullet	Multifilament seine; monofilament gillnet/seine	Baseline	Pilot	12 days	Moderate	Moderate	Moderate
NC Long-Haul Seines	Spot, weakfish, Atlantic croaker	Seine	Baseline	Pilot	8 days	Moderate	Moderate	Moderate
NC Stop Nets	Striped mullet	Multifilament anchored net and multifilament beach seine	Baseline	Pilot	100 days	Moderate	Moderate	Moderate
Black Sea Bass Pot Fishery	Black sea bass	Pot/traps	None	Baseline	50 days	Moderate	Moderate	Low
Winter Fluke (Flounder) Trawls	Flounder	Trawls	Baseline	Pilot	91 days	Moderate	Low	Moderate

The program level (stage) classifications are defined in Table 3. A dash (-) indicates that an estimate of the number of sea days needed for the next level was not available. The vulnerability classification are defined and discussed in Section 7. The other protected species are ESA species (excluding marine mammals), other sea turtles and other seabirds.

Table 4.3. Survey of Northwest Region fishery-specific at-sea observer programs, including current program level, recommended enhancements and bycatch vulnerability.

Fishery	Target species	Gears	Program level	Next Level	Sea days needed for next level	Vulnerability by type of bycatch		
						Fish	Marine Mammals	Other protected species
West Coast Mid-Water Trawl for Whiting, At-Sea Processing	Pacific whiting	Pelagic trawl	Mature	Maintain	-	Low	Low	High
West Coast Mid-Water Trawl for Whiting, Shoreside Processing	Pacific whiting	Pelagic trawl	Pilot	Maintain	-	Low	Low	High
West Coast Groundfish Bottom Trawl	Flatfish, rockfish, roundfish, assorted skates/sharks	Bottom trawl, large (>8" dia.) and small (<8") footrope	Developing	Mature	-	High	Low	Moderate
West Coast Groundfish Non-trawl Gear	Sablefish, rockfish, greenling, assorted roundfish	All non-trawl gear: hook-and-line, net gear, pot gear	Developing	Mature	-	High	Low	Low
West Coast Salmon Troll, Non-Tribal Ocean	Salmon	Troll hook-and-line gear	Baseline	Baseline	-	Moderate	Low	Low
West Coast Pacific Halibut Longline, Non-Tribal	Pacific halibut	Longline	None	Baseline	4	Moderate	Low	Low

The program level (stage) classifications are defined in Table 3. A dash (-) indicates that an estimate of the number of sea days needed for the next level was not available. The vulnerability classification are defined and discussed in Section 7. The other protected species are ESA species (excluding marine mammals), other sea turtles and other seabirds.

Table 4.4. Survey of Alaska Region fishery-specific at-sea observer programs, including current program level, recommended enhancements and bycatch vulnerability.

Fishery	Target species	Gears	Program level	Next Level	Sea days needed for next level	Vulnerability by type of bycatch		
						Fish	Marine Mammals	Other protected species
Pacific Halibut Individual Fishing Quota	Pacific halibut	Hook and line (mainly longline)	None	Pilot	115 days	Moderate	Low	Moderate
BSAI Groundfish Trawl	Pollock, Pacific cod, flatfish, rockfish, Atka mackerel	Trawl	Developing	Mature	-	High	Moderate	Moderate
BSAI Groundfish Longline	Pacific cod, flatfish, sablefish	Longline	Developing	Mature	-	Moderate	Low	Moderate
BSAI Groundfish Pot	Pacific cod, sablefish, rockfish	Pot	Developing	Mature	-	Low	Low	Low
BSAI Groundfish Jig	Pacific cod, rockfish	Jig	None	Baseline	3 days	Low	Low	Low
GOA Groundfish Trawl	Pollock, Pacific cod, flatfish, rockfish	Trawl	Developing	Mature	-	Moderate	Low	Moderate
GOA Groundfish Longline	Pacific cod, sablefish, rockfish	Longline	Developing	Mature	-	Moderate	Low	Moderate
GOA Groundfish Pot	Pacific cod	Pot	Developing	Mature	-	Low	Low	Low
GOA Groundfish Jig	Pacific cod, rockfish, sablefish, flatfish	Jig	None	Baseline	14 days	Low	Low	Low
Select State Managed Salmon	Salmon	Drift and set gillnet and purse seine	None-Baseline *	Baseline-Pilot *	>600 days	Low **	Moderate	Low ***

The program level (stage) classifications are defined in Table 3. A dash (-) indicates that an estimate of the number of sea days needed for the next level was not available. The vulnerability classification are defined and discussed in Section 7. The other protected species are ESA species (excluding marine mammals), other sea turtles and other seabirds. *The current design classification and , therefore, the next step varies by area and gear. ** Note that, with one exception, controlling the bycatch of fish, non-marine mammal ESA species and seabirds in these state managed salmon fisheries is not a stewardship responsibility of NMFS. The exception is the bycatch of ESA listed Pacific Northwest salmon stocks. The Northwest Region has the lead for protecting those stocks.

Table 4.5. Survey of Northeast Region fishery-specific at-sea observer programs, including current program level, recommended enhancements and bycatch vulnerability.

Fishery	Target species	Gears	Program level	Next Level	Sea days needed for next level	Vulnerability by type of bycatch		
						Fish	Marine Mammals	Other protected species
New England Large Mesh Otter Trawl	Gadoids, flatfish, monkfish	Otter trawl	Developing	Mature	-	Moderate	Low	Low
New England Small Mesh Otter Trawl	Gadoids, herring, small pelagics, dogfish	Otter trawl	Developing	Mature	-	Moderate	Low	Low
New England Gillnet	Gadoids, flatfish, dogfish	Demersal gillnet	Developing	Mature	-	Moderate	High	Moderate
New England Demersal Longline	Gadoids, dogfish	Longline	Baseline	Pilot	50 days	Moderate	Low	Low
Gulf of Maine Shrimp Trawl	Northern shrimp	Otter trawl	Baseline	Pilot	36 days	Moderate	Low	Low
Georges Bank Scallop Dredge	Sea scallop	Mechanical dredge	Developing	Mature	-	Moderate	Low	High
Mid-Atlantic Large Mesh Otter Trawl	Summer flounder, black sea bass, scup	Otter trawl	Developing	Mature	-	Moderate	Low	Moderate
Mid-Atlantic Small Mesh Otter Trawl	Squid, mackerel, butterfish	Otter trawl	Pilot	Developing	-	Moderate	High	Moderate
Mid-Atlantic Longline	Tilefish	Longline	Baseline	Pilot	50	Moderate	Low	Low
Mid-Atlantic Gillnet	Monkfish, dogfish	Gillnet	Developing	Mature	-	Moderate	High	High

Table 4.5 (Continued)

Fishery	Target species	Gears	Program level	Next Level	Sea days needed for next level	Vulnerability by type of bycatch		
						Fish	Marine Mammals	Other protected species
Mid-Atlantic/S. New England Small Pelagics	Herring, mackerel	Midwater trawl	Pilot	Developing	-	Low	Moderate	Moderate
Gulf of Maine Small Pelagics	Herring, mackerel	Midwater trawl	Baseline	Pilot	75 days	Low	Moderate	Moderate
Mid-Atlantic Scallop Dredge	Sea scallop	Dredge	Developing	Mature	-	Moderate	Low	High
Lobster/Crab Trap	Lobster, cancer crab, red crab	Traps	None	Baseline	100 days	Low	High	Low
Other Pots	Cancer crab, red crab, whelk, black sea bass	Traps	Baseline	Pilot	80 days	Low	Moderate	Low
Pound Nets	Croaker, drum, weakfish, flounder	Fish trap	Baseline	Pilot	40 days	Moderate	Moderate	Moderate
Weirs	Herring	Fish trap	None	Baseline	30 days	Moderate	Moderate	Moderate
Hydraulic Dredge	Surf clams, ocean quohogs	Hydraulic dredge	Baseline	Pilot	30 days	Low	Low	Low

The program level (stage) classifications are defined in Table 3. A dash (-) indicates that an estimate of the number of sea days needed for the next level was not available. The vulnerability classification are defined and discussed in Section 7. The other protected species are ESA species (excluding marine mammals), other sea turtles and other seabirds.

Table 4.6. Survey of Pacific Island Region fishery-specific at-sea observer programs, including current program level, recommended enhancements and bycatch vulnerability.

Fishery	Target species	Gears	Program level	Next Level	Sea days needed for next level	Vulnerability by type of bycatch		
						Fish	Marine Mammals	Other protected species
Pelagic Longline	Tuna, mahimahi, other	Longline	Developing	Mature	-	Moderate	Moderate	High
Pelagic Hook-and-Line (Rod and Reel)	Tuna, mahimahi, other	Hook and line	None	Baseline	-	Low	Low	Low
Pelagic Handline	Tuna, mahimahi, other	Handline	None	Baseline	-	Low	Low	Low
NWHI Crustaceans	Spiny and slipper lobster	Traps	Baseline	Pilot	-	Moderate	Moderate	Low
NWHI Bottomfish	Snapper, carangids	Handline	None	Pilot	-	Moderate	Moderate	Low
Pelagic Purse Seine	Tuna	Purse seine	Mature	Maintain	-	Moderate	Low	Moderate
Precious Corals	Stony corals	Tangle nets	None	Baseline	-	Low	Low	Low

The program level (stage) classifications are defined in Table 3. A dash (-) indicates that an estimate of the number of sea days needed for the next level was not available. The vulnerability classification are defined and discussed in Section 7. The other protected species are ESA species (excluding marine mammals), other sea turtles and other seabirds.

Table 5. Frequency and percent of observer programs by level (i.e., stage)*.

Current Observer Program	Frequency					
	# Fisheries	# None	# Baseline	# Pilot	# Developing	# Mature
Southwest	6	4	0	1	0	1
Southeast	37	17	14	4	1	1
Northwest	6	1	1	1	2	1
Alaska	10	3	1	0	6	0
Northeast	18	2	7	2	7	0
Pacific Islands	7	4	1	0	1	1
Total	84	31	24	8	17	4

Current Observer Program	Percent					
	Fisheries	None	Baseline	Pilot	Developing	Mature
Southwest	100%	67%	0%	17%	0%	17%
Southeast	100%	46%	38%	11%	3%	3%
Northwest	100%	17%	17%	17%	33%	17%
Alaska	100%	30%	10%	0%	60%	0%
Northeast	100%	11%	39%	11%	39%	0%
Pacific Islands	100%	57%	14%	0%	14%	14%
Total	100%	37%	29%	10%	20%	5%

* The five program level classifications are defined in Table 3.

Percent coverage levels were put into the criteria to move the programs up through the initial stages of the process, but were purposely not suggested for the more advanced stages. In the initial expansion of any sampling program, a certain level of coverage must be established to determine the next developmental steps in the process. Using the coverage level standards developed by the ACCSP, it was determined that a 2% coverage level would allow each of the programs to develop up to the pilot stage of sampling. This level of coverage would allow enough data to be collected for coverage levels and stratification designs to be developed to move the programs up through the more advanced sampling levels. However, for fisheries with a large amount of effort (a large number of vessel-sea days), a simple 0.5-2% rule may be prohibitively expensive and statistically wasteful. Therefore, it is recommended that in the Baseline and Pilot stages of a program that sample sizes not exceed 100 per strata or an overall coverage of 0.5-2%, whichever is smaller. This sampling level would allow initial evaluation and planning to occur for Developing and Mature observer programs. Sampling would then either increase or decrease depending on the design characteristics chosen.

Fixed or recommended percentage coverage levels for the advanced stages are not appropriate, since the amount and allocation of the coverage levels are developed by statistical methodologies and will differ from fishery to fishery and region to region. A fishery with a few abundant, but evenly distributed, bycatch species will have a very different sampling design than a fishery with many uncommon bycatch species with patchy distributions. At the mature stage of development, the two programs will have very different percentage levels of coverage.

6.2.2 Enhanced Sample Sizes and Costs

Of the fisheries reviewed in Tables 4.1-4.6, 60% were suggested as candidates for "next step" improvement to a Baseline or Pilot sampling program. Using the quantitative sampling criteria of Table 6, estimates were made of the number of observed sea days (observed trips or observed participants) that are needed to move sampling programs from None to Baseline or None to Pilot.

Estimates of cost per observation day are quite variable between fisheries and between regions. Estimates vary from $350 to $2,000 per observation day (at-sea day) (or $450-2,000 per day if all program costs are prorated to a cost per day basis). The reasons for the variation include: logistical difficulties for observers to join trips (lengthy travel, onshore travel costs), insurance, food, data entry, quality control, training, analytical costs and program management. Differences in these factors arise from differences in who pays for these various costs, whether the program is large enough for economies of scale and the geography of the fishery.

Cost estimates for Baseline and Pilot observer programs were not made. Cost estimates to establish baseline or pilot-level information for all fisheries can be made, based on knowledge of the fisheries. Additionally, costs associated with Developing and Mature programs may be obtained. It is foreseeable that sampling programs that are in advanced stages could call for either more or less sampling coverage when optimized for changing budgets and/or precision goals. However, it is expected that in general more precision (and, thus, larger budgets) will be required.

Table 6. Sampling criteria for enhanced observer programs.

From: Current Program	To: Enhanced Program	Improvement Criteria
None	Baseline	0.5-1% coverage of total effort preferably distributed across initial time/area/gear strata. There should be a minimum sample size of three per strata. Maximum sample sizes for Baseline and Pilot programs should be 100 per strata until quantitative designs can be developed. Focus on definition of relevant strata and the determination of the likelihood of a bycatch problem. Recommend uniform sampling allocation.
None	Pilot	0.5-2% coverage of total effort distributed across refined time/area/gear/vessel strata. There should be a minimum sample size of three per strata. Maximum sample sizes for Baseline and Pilot programs should be 100 per strata until quantitative designs can be developed. Recommend uniform allocation or alternative more efficient allocations (e.g., proportional allocations) based on available data. This approach to skip baseline would be for fisheries where a perceived bycatch problem has been noted from non-systematic observation.
Baseline	Pilot	1-2% coverage of total effort distributed across refined time/area/gear/vessel strata. There should be a minimum sample size of three per strata. Maximum sample sizes for Baseline and Pilot programs should be 100 per strata until quantitative designs can be developed. Recommend uniform allocation or alternative more efficient allocations (e.g., proportional allocations) based on available data.
Pilot	Developing	Stratified random designs have been established and optimal sampling allocations are developed, implemented and evaluated. Strategy for meeting recommended precision goals is established
Developing	Mature	An optimal sampling allocation scheme has been implemented. It is periodically re-evaluated considering changes in the fishery over time. Precision goals are being met.

7. Vulnerability of Fisheries to Adverse Impacts of Bycatch

Each fishery was rated in terms of its "vulnerability" to adverse impacts on bycatch species (either existing or expected to arise in the future). The assignment of ratings was designed to provide guidance for priority-setting in developing strategies for addressing bycatch issues. Vulnerability criteria might include such factors as the degree of overfishing of target species, life history characteristics of target and bycatch species and the spatial-temporal patterns of the bycatch and target species.

When examining the impact of fishing on a species or stock of fish, the metric that is most often used is the Spawning Potential Ratio (SPR), that is, the contribution to reproductive potential of a cohort of animals over its lifetime when undergoing fishing relative to that contribution when no fishing is occurring. In order to calculate SPR, one needs age-specific rates of natural mortality, fishing mortality, fecundity and growth. In many cases, fishing mortality rates that result in an SPR of 35–40% are approximations of the fishery mortality rate at maximum sustainable yield. When examining bycatch impacts on a species or stock, the SPR concept may be expanded to look at the reproductive potential (1) when there is bycatch mortality and no target fishing relative to when there is neither bycatch nor target fishing; (2) when there is both bycatch and target fishing relative to no fishing; and (3) when there is both bycatch and target fishing relative to when there is just target fishing. The first calculation examines the risk to the population of bycatch alone; the second looks at the total risk to the population under all fishing mortality; and the third addresses the relative, incremental risk imposed by bycatch beyond that of the target fisheries. Ideally, these calculations would be made for every bycatch species within a fishery and then fisheries could be assigned vulnerability based on those risks. For example, bycatch of species *x* might be assigned *High* vulnerability if SPR with both target and bycatch fishing was below 40%, or if SPR with bycatch alone was reduced to, say, 50%. The results by species or stock could be grouped in categories within a fishery to assign vulnerability to the fishery as a whole.

However, the number of species for which this can be done is limited due to the lack of data. For example, the required data are available for few non-target species such as many deep-water coral species. Therefore, a more qualitative approach was used. Each fishery was assigned a "vulnerability" of *High, Moderate*, or *Low* for bycatch of the fishery resources, for the bycatch of marine mammals and for the bycatch for other protected species (i.e., ESA-listed species (excluding marine mammals), other sea turtles and other seabirds). Endangered and threatened marine mammals were included in the marine mammal category, rather than the "other protected species" category since regulatory procedures for both types of marine mammals are defined similarly. The vulnerability issues are similar for the species included in "other protected species" category. No attempt was made to weight vulnerability among the three resource types. The criteria used to define *High*, *Moderate* and *Low* vulnerability for these three resource groups are presented below.

7.1 Vulnerability Criteria for Fishery Resources

Regional experts within NMFS were polled and asked to address five questions for *each* of the fisheries within their region (see Tables 4.1-4.6):

> Does uncertainty in bycatch estimates contribute in an important way to application of management constraints such as TACs, PBRs, days at sea, the minimum stock size threshold (MSST), the maximum fishing mortality rate threshold (MFMT), etc.? For example, if bycatch is a large proportion of the total catch, and/or if the precision of the

inputs to stock assessment models is much better than that of the bycatch, then uncertainty contributes in an important way.

Is there a high discard or bycatch rate or amount relative to total catch? Indicate whether this is a current management concern due to the absolute amount of discard or rate.

Does the bycatch of this fishery cause significant mortality of any species listed as overfished? For example, if the mortality affects an overfished species' rebuilding schedule, then the mortality is significant.

Are the target species of this fishery undergoing overfishing or overfished?

Does the bycatch impact other fishery allocations? For example, do levels of bycatch taken in the fishery result in lower catch limits, closures, etc. in other fisheries or sectors?

The experts were also asked to provide their own overall rating for the fishery and to provide comments on the reasons for that rating. The five questions were designed to address risks to the bycatch species taken in the fishery, risks to target species of the fishery, constraints on management imposed by uncertainty in the bycatch, and allocation impacts imposed on other fisheries. Answers to these questions were grouped according to the number of positive responses and were compared to the overall judgement on vulnerability of the fishery by the regional expert. Fisheries were assigned *High*, *Moderate* or *Low* vulnerability based on the number of affirmative responses to the five questions. Note that for many non-target species and some target species, there is insufficient stock assessment and bycatch information to determine bycatch vulnerability for a specific fishery.

7.2 Vulnerability Criteria for Marine Mammals

Vulnerability criteria for marine mammals in individual fisheries have already been established by the MMPA (16 U.S.C. 1387 (c)(1)(A)) and codified in regulations at 50 CFR 229.2. The resulting ranking of marine mammal vulnerability for each fishery is identified in the annual List of Fisheries which categorizes fisheries based on the level of incidental mortality and serious injury the fishery causes relative to a marine mammal stock's potential biological removal level (PBR). A Category I fishery is one that results in frequent incidental mortality and serious injury of marine mammals and by itself is responsible for the annual removal of 50% or more of any stock's PBR level. A Category II fishery is one that results in occasional incidental mortality and serious injury of marine mammals. A Category II fishery, collectively with other fisheries, is responsible for the annual removal of more than 10% of any marine mammal stock's PBR and by itself responsible for the annual removal of between 1% and 50% of any stock's PBR. A Category III fishery is one that has a remote likelihood or no known incidental mortality and serious injury of marine mammals and that (1) collectively with other fisheries is responsible for the annual removal of 10% or less of any marine mammal stock's PBR, or (2) by itself is responsible for the annual removal of 1% or less of any marine mammal stock's PBR. The Category of a fishery that takes marine mammals is based upon a procedure that is analogous to the SPR metric mentioned above, except that usually there is no targeted take of marine mammals.

Thus, the MMPA Category of a fishery was the basis for assigning vulnerability: Category I fisheries were assigned *High* vulnerability, Category II fisheries were assigned *Moderate* vulnerability and Category III fisheries were assigned *Low* vulnerability. Additionally, fisheries that NMFS is evaluating with respect to a Category I or II classification, but that are currently listed as Category III, were assigned *Moderate* vulnerability in this report.

7.3 Vulnerability Criteria for Other Protected Species, Including Seabirds

The vulnerability of other protected species, (i.e., ESA-listed species (excluding marine mammals), other sea turtles and other seabirds) in individual fisheries was assigned based upon the relative seriousness of the impact of bycatch on the species' recovery.

Where authorization of the fishery required a formal Section 7 consultation and the result of the Biological Opinion was a jeopardy finding within the last 3-5 years, or where the Biological Opinion has been challenged and is being reevaluated by NMFS (e.g., New England scallop fishery), vulnerability of other protected species was rated *High* for that fishery. Where authorization of the fishery required a formal Section 7 consultation, but the result of the Biological Opinion was No Jeopardy and an incidental take statement exists and is being complied with, vulnerability of other protected species was rated *Moderate* for that fishery. Where authorization of a fishery did not require formal consultation and no incidental take statement was needed, vulnerability of other protected species was rated as *Low* for that fishery. As noted above, the vulnerability issues are similar for the species included in the "other protected species" category.

In the future, the USFWS's list of "species of concern" will be used to identify seabird species for which bycatch vulnerability is *Moderate*. The purpose of this list is to highlight potential conservation issues and concerns before species get listed. This list is maintained by the USFWS Division of Migratory Bird Management and is available at: http://migratorybirds.fws.gov/reports/bcc2002.pdf

7.4 Bycatch Vulnerability of Fisheries

Vulnerability classifications for each fishery are given in Tables 4.1-4.6. Summaries of the classification statistics are presented below and in Table 7.

- 1% of these fisheries are rated as having a *High* vulnerability for bycatch of all three resource types (fishery resources, marine mammals and other protected species).
- 6% of these fisheries are rated *High* for bycatch of two or more of the three resource types.
- 31% of these fisheries are rated *High* for bycatch of one or more of the three resource types (thus, 69% are rated *Moderate* or *Low* for all three resources).
- 6% of these fisheries are rated *High* for bycatch of one or more of the three resource types *AND* have a suggested "next step" sampling program of baseline or pilot.
- 15% of these fisheries are rated *High* for bycatch of fishery resources (85% are rated *Moderate* or *Low*).
- 7% of these fisheries are rated *High* for bycatch of marine mammals (93% are rated *Moderate* or *Low*).
- 15% of these fisheries are rated *High* for bycatch of other protected species including seabirds and sea turtles (85% are rated *Moderate* or *Low*).

- 26% of these fisheries are rated as having a *Low* vulnerability for bycatch for all three resource types.

Table 7. Frequency summary of vulnerability classifications per NMFS Region

Vulnerability	Frequency								
	Number of Fisheries	High Fish	High MM	High OPS	High in 1 or more	High in 2 or 3	High in All 3	Low in All 3	High in 1 or more AND next step program is baseline or pilot
Southwest	6	0	0	2	2	0	0	2	0
Southeast	37	9	2	5	12	3	1	12	5
Northwest	6	3	0	2	4	1	0	0	0
Alaska	10	1	0	0	1	0	0	4	0
Northeast	18	0	4	3	6	1	0	1	0
Pacific Islands	7	0	0	1	1	0	0	3	0
Total	84	13	6	13	26	5	1	22	5

MM = marine mammals
OPS = other protected species

8. Strategies to Address Bycatch

The best method(s) to address the bycatch problem(s) in a particular fishery will depend on fishery-specific factors including: the nature and source of the bycatch problem(s) in the fishery, the information required and available to effectively and efficiently implement a solution, and the expected net benefits of a particular solution.

8.1 The Nature and Source of the Bycatch Problem

Bycatch mortality can decrease the sustainability of a fishery and the net benefits provided by that fishery. It can do this in four ways. First, if bycatch mortality is not monitored adequately, it increases the uncertainty concerning total fishing-related mortality, which in turn makes it more difficult to assess the status of stocks of fish and other bycatch species, to set the appropriate optimum yields and overfishing levels for fish stocks, to determine acceptable levels of bycatch for other bycatch species, and to ensure that the optimum yields are attained, that overfishing does not occur and that the acceptable levels of bycatch for other species are not exceeded. Second, the discards themselves can have adverse effects on other species. Third, bycatch mortality precludes some other uses of living marine resources. For example, juvenile fish that are subject to bycatch mortality will not contribute directly to the growth of that stock and to future catch. Nor can they be available as prey for depleted stocks and other species. Bycatch is a wasteful use of living marine resources if it precludes a higher valued use of those resources. Fourth, in the absence of management measures designed to reduce bycatch, there will typically be too much bycatch, that is, the overall net benefit to the Nation from that fishery can be increased by decreasing bycatch. However, without adequate information concerning the biological, ecological, social, and economic effects of a set of bycatch management measures, the measures can be ineffective and inefficient and in some cases the measures will decrease the net benefits derived by the Nation from the use of living marine resources.

If the problem is due principally to uncertainty concerning fishing-related mortality, improved bycatch monitoring systems should be considered and may be sufficient to solve the bycatch problem. A strategy for developing an adequate bycatch monitoring program is to progress, as necessary, from the current program to a Mature bycatch monitoring program. For some fisheries the progression would be from basically no independent at-sea observations of fishing operations, to a Baseline program, to a Pilot program, to a Developing program, and finally to a Mature at-sea monitoring program.

At each level, the monitoring program could rely on at-sea observers, electronic monitoring, or a combination of the two. The best mix of these two methods for independent at-sea observations will vary by fishery, by the bycatch species of most concern, and over time. The information provided by each type of program will be used in determining if it is appropriate to implement a more extensive monitoring program, the priority for doing so, and the nature of the enhancements that should be made when enhancements are necessary. Due both to changes in circumstances in fisheries and technological progress in monitoring methods, a periodic review of the monitoring program will be required to identify the appropriate changes.

In some cases, a less extensive program may demonstrate that the bycatch problems in a fishery are minimal and do not justify the progression to a Mature monitoring program. In some other cases, the initial monitoring program may demonstrate that there is a substantial bycatch problem, that the cost of a Mature monitoring program would be prohibitive, but that there are relatively low cost methods for substantially reducing bycatch. This could occur, for example, if the bycatch of a species of concern is a very rare event and the effectiveness of the bycatch reduction methods is expected to be similar for the very rare species and some species that are

more easily monitored. In other cases, an initial monitoring program may provide information that would justify a rapid progression to a Mature monitoring program.

If the problem is principally adverse effects on other species due to the discards themselves, it may be possible to solve the problem effectively and efficiently by controlling the temporal and spatial distribution of discards or by prohibiting the discard of whole fish.

If the problem is excessive human-induced mortality for a particular stock and there are several sources of that mortality, the merits of reducing the alternative sources of mortality should be considered. For example, in the case of overfishing, the solution could be to decrease the catch or bycatch of that stock or both. The appropriate choice will depend on the marginal net benefit of each of these two uses of the stock that is being overfished. Similarly, in the case of protected species, additional methods for increasing or maintaining their populations also should be considered. These additional methods may include decreasing other sources of mortality and improving habitat. The extent to which each method should be used for a specific protected species depends on the marginal cost of providing protection with each of the feasible methods.

If it is determined that there is too much bycatch in a fishery (i.e., the overall net benefit to the Nation from that fishery can be increased by decreasing bycatch), there are two general types of solutions. Regulations can be developed and implemented that prohibit fishermen from fishing in ways that result in too much bycatch. For example, regulations can prohibit fishing in specific times or areas, they can require the use of specific gear or gear modifications, and they can restrict the use of catch or the level of bycatch. Alternatively, regulations can be developed and implemented to eliminate or decrease incentives (i.e., externalities) that result in fishermen taking too much bycatch. Typically, much of the benefit of reducing bycatch accrues to others, not to the fisherman who modifies fishing practices to decrease bycatch. The benefits others receive are external to the fisherman's decision making process; therefore, from society's perspective, the fisherman does not do enough to reduce bycatch. The externalities are the source of the excess bycatch problem, and in some cases decreasing the externalities will be the appropriate solution. But that will require holding individual fishermen accountable for their bycatch, and the monitoring required to do that may not be feasible.

The MSA specifies that bycatch be minimized *to the extent practicable*. Generally, there will be some practical limitations on how much bycatch can be reduced within feasible fishery operating procedures. There may be uncertainty or a misunderstanding concerning the extent to which it is practicable to reduce bycatch. Thus, in these instances there needs to be a full and complete public debate of the options and ramifications of bycatch reduction including research and outreach programs that decrease the uncertainty and increase the general understanding of the effects of specific methods of decreasing bycatch.

8.2 Information Needed to Implement an Effective and Efficient Solution to the Bycatch Problem for the Fishery

With sufficient information, fishery managers could identify the best way for each fishing operation to decrease its bycatch. The difficulty is that fishery managers have relatively limited and usually static information. Individual fishermen usually have more complete and more timely information concerning methods for decreasing bycatch, but as noted above, they may lack the appropriate incentives. In selecting the management approach that will be used to decrease bycatch, it is important to be realistic about information deficiencies and the difficulty of providing the correct incentives to fishermen.

Research concerning the response of fish and other bycatch species to fishing gear and fishing operations can assist in developing effective and efficient methods for reducing bycatch and bycatch mortality. Such research is also necessary to determine the extent to which a change in gear or fishing practices decreases bycatch as opposed to, for example, just replacing discard mortality with unobserved fishing mortality. In many cases, the information needed to implement effective and efficient bycatch solutions can result from cooperative research with the commercial and recreational fishing industry.

8.3 Expected Net Benefits

Although the information required to precisely estimate the net benefits of alternative solutions will seldom be available, an effort should be made to consider both the benefits and costs of the alternative strategies, where the benefits and costs are broadly defined to address the biological, ecological, social, and economic effects of bycatch and bycatch management. Such an approach is required for good stewardship and to meet federal regulatory mandates, including those in the MSA, the MMPA, the ESA, the National Environmental Policy Act, the Regulatory Flexibility Act, and Executive Order 12866. Outreach and public debate to obtain information concerning the benefits and costs of the alternatives can be done through the Council and NMFS processes that may be used to develop and evaluate alternatives. In general, more complete information concerning the biological, ecological, social, and economic effects of bycatch and methods for reducing bycatch are required to develop more effective and efficient methods for managing bycatch. As more efficient methods for reducing bycatch are developed, further reductions in bycatch will become practicable.

8.4 Setting National Priorities for Improving Bycatch Monitoring

The Magnuson-Stevens Act requires a *standardized reporting methodology* for bycatch (see Appendix 5). There are a variety of standardized methodologies that can be used to meet this requirement. As noted in previous sections, there are tradeoffs between the quality of the bycatch estimates and the bycatch monitoring costs either when choosing among methodologies or when choosing sample sizes. The cost of improving the quality of the bycatch estimates will decrease as the methodologies are improved. For example, such improvements will result from improving either sample designs or observation technologies. However, the tradeoffs will remain and for each fishery the appropriate choice between the cost and quality of bycatch estimates will depend on the importance of improving the quality of the estimates. That will be determined by a variety of factors. For example, if the expected level of bycatch is very low compared to other sources of fishing mortality and if the populations of the bycatch species are healthy, a low-cost reporting methodology that provides estimates with low precision may be appropriate. Conversely, if bycatch is thought to account for a large part of the fishing mortality of a species that is overfished, better bycatch estimates and higher bycatch monitoring costs are justified.

Typically, the recommended precision goals for bycatch estimates cannot be met without an at-sea observation program. In most cases with the current technologies, such programs will include at-sea observers. Therefore, this section focuses on setting priorities for implementing and improving observer programs.

Fisheries that have bycatch vulnerability rated as *High* for one or more of the three types of bycatch are high priority candidates for additional funding to improve the observer programs. There are 26 such fisheries in Tables 4.1-4.6 (2 in the Southwest, 12 in the Southeast, 4 in the Northwest, 1 in Alaska, 6 in the Northeast and 1 in the Pacific Islands). Estimates of sampling

requirements needed to maintain or bring these fisheries up to the required precision goals in Developing and Mature programs have not been made for all of the fisheries.

There are no observer programs for 37% of the fisheries in Tables 4.1-4.6. However, few of these fisheries have been classified as having a *High* bycatch vulnerability for one or more of the three types of bycatch species (fish, marine mammals and other protected species, including seabirds and sea turtles). These few fisheries are high priority candidates for Baseline or Pilot at-sea observer programs.

The remaining fisheries in Tables 4.1-4.6 have a bycatch vulnerability rating of *Low* or *Moderate* for all three types of bycatch. The observer program classifications for these fisheries range from None to Developing programs. These fisheries are lower priority candidates for either implementing an observer program or improving the existing program. There are 58 such fisheries in Tables 4.1-4.6. Since these remaining fisheries have bycatch ratings of only *Low* or *Moderate* vulnerability, the Baseline or Pilot programs could be conducted using an annual rotation (perhaps, three-year) unless results indicated that more mature sampling programs should be developed.

As at-sea observer programs are implemented and improved, it may become clearer that there are minor bycatch problems in some fisheries and unexpectedly severe bycatch problems in other fisheries. In the latter case, the development of effective and efficient actions to decrease bycatch may require more extensive programs than are required to meet the recommended precision goals for bycatch estimates.

9. Literature Cited

AFSC (Alaska Fisheries Science Center). 2003. North Pacific Groundfish Observer Manual. North Pacific Groundfish Observer Program. AFSC, 7600 Sand Point Way NE, Seattle, Washington, 98115.

ASMFC (Atlantic States Marine Fisheries Commission). 1997. Workshop on bycatch data collection: Developing an Atlantic Coast bycatch monitoring program. Final Report for NOAA Grant NA67 FMO 475. 69 p.

Babcock, E.A., Pikitch, E.K. and C.G. Hudson. 2003. How much observer coverage is enough to adequately estimate bycatch? Oceana, Washington, D.C. Available at: http://www.oceana.org/uploads/BabcockPikitchGray2003FinalReport.pdf

Barlow, J. 1999. Strategies for the statistical monitoring of fishery bycatch. In: Development of a process for the long-term monitoring of MMPA Category I and II commercial fisheries, edited by A. Didier and V. Cornish, NOAA Technical Memorandum NMFS-OPR-14. p. 9-11.

Cochran. W.G. 1977. Sampling Techniques. J. Wiley and Sons, New York.

Credle, V.R. 1993. Is-self reporting of marine mammal interactions a useful management tool? Abstract in Proceedings of Tenth Biennial Conference on the Biology of Marine Mammals, Galveston, TX, November 11-15, 1993. p. 38.

Epperly, S.P., J. Braun, A.J. Chester, F.A. Cross, J.V. Merriner, P.A. Tester, and J.H. Churchill. 1996. Beach strandings as indicators of at-sea mortality of sea turtles. Bulletin of Marine Science, 59(2): 289-297.

Fadely, B. 1999. Qualitative or reduced monitoring methods. In: Development of a process for the long-term monitoring of MMPA Category I and II commercial fisheries, edited by A. Didier and V. Cornish, NOAA Technical Memorandum NMFS-OPR-14. p. 22-23.

Fox, D.S. and R.M. Starr. 1996. Comparison of commercial and research catch data. Canadian Journal of Fisheries and Aquatic Sciences 53:2681-2694.

Fogarty, M. and W. Gabriel. Unpub. ms. Relative precision of discard estimates for the northeast groundfish complex.

Geernaert, T.O., H. Gilroy, S. Kaimmer, G. Williams, and R. Trumble. 2001. A feasibility study that investigates options for monitoring bycatch of the short-tailed albatross in the Pacific halibut fishery off Alaska. Prepared for the National Marine Fisheries Service by the staff of the International Pacific Halibut Commission. 59 p.

Hall, M.A. 1999. Estimating the ecological impacts of bycatches: what data are needed to estimate bycatches? In: Proceedings of the International Conference on Integrated Fisheries Monitoring, Sydney, Australia, 1-5 February 1999. FAO, Rome. p. 175-184.

Hiatt, Terry, Ron Felthoven, Chang Seung, and Joe Terry. Economic status of the groundfish fisheries off Alaska, 2002. Available at: http://www.afsc.noaa.gov/refm/docs/2003/Economic.pdf

Hoag, S. H. 1975. Survival of halibut released after capture by trawls. International Pacific Halibut Commission Scientific Report 57. 18 p. Available at: http://www.iphc.washington.edu/halcom/pubs/scirep/SciReport0057.pdf

Hohn, A.A. and P.T. Martone. 2001. Characterization of bottlenose dolphin strandings in North Carolina, 1997-2000. Prepared for the Dolphin-Fishery Interaction Workshop. Available from NMFS, Beaufort, NC 28516.

Hohn, A.A., B. Mase, J. Litz, W. McFee, and B. Zoodsma. 2001. Characterization of human-caused strandings of bottlenose dolphins along the Atlantic Coast from South Carolina to Southern Florida, 1997 – 2000. Draft paper prepared for the Bottlenose Dolphin Take Reduction Team. Available from, NMFS, Southeast Fisheries Science Center, 75 Virginia Beach Dr. Miami FL 33194.

IPHC (International Pacific Halibut Commission). 2003. Area 2A Sport Halibut Seasons at-a-glance. Available at: www.iphc.washington.edu.halcom.sport/2asportglance.htm

Liggens, G.W., M.J. Bradley and S.J. Kennelly. 1997. Detection of bias in observer-based estimates of retained and discarded catches from a multispecies trawl fishery. Fisheries Research. 32:133-147.

Mayo, R.K., A.M. Lange, S.A. Murawski, M.P. Sissenwine, and B.E. Brown. 1981. Estimation of discards in mixed trawl fisheries off the Northeast Coast of the United States, based on bottom trawl survey catches. Northeast Fisheries Science Center Laboratory Reference Document 81-18.

Mayo, R.K., L. O'Brien, and N. Buxton. 1992. Discard estimates of American plaice *Hippoglossoides platessoides*, in the Gulf of Maine Northern Shrimp Fishery and the Gulf of Maine-Georges Bank large-mesh otter trawl fishery. Stock Assessment Workshop Research Document 14/3.

McElderry, H., J. Schrader, D. McCullough, J. Illingworth, S. Fitzgerald, and S. Davis. 2004. Electronic monitoring of seabird interactions with trawl third-wire cables on trawl vessels - a pilot study. U.S. Dep. Commer., NOAA Tech. Memo. NMFS-AFSC-147, 39 p. Available at: http://www.afsc.noaa.gov/Publications/AFSC-TM/NOAA-TM-AFSC-147.pdf

NMFS (National Marine Fisheries Service). 1998a. Managing the Nation's bycatch: priorities, programs and actions for the National Marine Fisheries Service. National Marine Fisheries Service, 192 p. Available at: http://www.nmfs.noaa.gov/bycatchplanonline.pdf

NMFS (National Marine Fisheries Service). 1998b. Report to Congress on the Proposed Implementation of a Fishing Vessel Registration and Fisheries Information System. Submitted to the Committee on Resources of the House of Representatives and the Committee on Commerce, Science, and Transportation of the Senate. 80 p.

NMFS (National Marine Fisheries Service). 2001. Marine fisheries stock assessment improvement plan. Report of the National Marine Fisheries Service National Task Force for Improving Stock Assessments. U.S. Dep. Commer., NOAA Tech. Memo. NMFS-F/SPO-56, 69 p., 25 appendices.

NMFS (National Marine Fisheries Service). 2002a. NMFS National Standing Working Group on Fishing Technology: Report of First Meeting, March 6-7, 2002. Pascagoula, MS, 48 p. (Available at www.nmfs.noaa.gov/bycatch.htm)

NMFS (National Marine Fisheries Service). 2002b. Fisheries Observers Insurance, Liability, and Labor Workshop, June 12-14, 2001; Technical Memorandum. Prepared by MRAG Americas, Tampa, FL; edited by D. Hansford and V. Cornish, NMFS Office of Science and Technology.

NMFS (National Marine Fisheries Service). 2003. Plan to manage risks and minimize liabilities associated with the deployment of contracted fisheries observers. Prepared by D. Cox, Quantech, Inc. and R. Goldberg, Schnader Harrison Segal & Lewis, NOAA Contract No. 50-DGNF-1-90089.

NMFS (National Marine Fisheries Service). 2004. NMFS Fisheries Observer Coverage Level Workshop: Defining a Basis Workshop, July 29–31, 2003; Summary Report. Prepared by MRAG Americas, Tampa, FL, and Iowa State University; edited by Graeme Parkes and Mark S. Kaiser, MRAG Americas and Iowa State University. Available at: http://www.nmfs.noaa.gov/by_catch/CoverageWorkshopFinalRevised.pdf

NRC (National Research Council). 1999. Sharing the Fish: Toward a National Policy on Individual Fishing Quotas. National Academy Press, Washington, DC, 422 p.

NRC (National Research Council). 2000. Improving the Collection, Management, and Use of Marine Fisheries Data. National Academy Press, Washington, DC. 222 p.

NEFSC (Northeast Fisheries Science Center). 1996. Analysis of 1994 fishing vessel logbook data. In: 22nd Northeast Regional Stock Assessment Workshop: Stock Assessment Review Committee consensus summary of assessments. NEFSC Reference Document 96-13; 242 p.

NWFSC (Northwest Fisheries Science Center), West Coast Groundfish Observer Program: Initial data report and summary analyses. 2003. Northwest Fisheries Science Center, 2725 Montlake Boulevard East, Seattle, WA 98112. Available at: http://www.nwfsc.noaa.gov/research/divisions/fram/Observer/narjan03.pdf

PacFIN. 2003. On-line report #316 16-Apr-2003 18:26. Www.psmfc.org/pacfin/data/r316.p02.

Price, T. 1999. The California drift gillnet fishery. In: Development of a process for the long-term monitoring of MMPA Category I and II commercial fisheries. Edited by A. Didier and V. Cornish, NOAA Technical Memorandum NMFS-OPR-14. p. 23-25.

Powers, J.E. and V.R. Restrepo. 1993. Evaluation of stock assessment research for Gulf of Mexico king mackerel: benefits and costs to management. North American Journal of Fisheries Management. 13:15-26.

RecFIN 2003. RecFIN MRFSS Estimates. www.psmfc.org/recfin/forms/est.html

Sampson, D. 2002. Final report to the Oregon Trawl Commission on analysis of data from the at-sea data collection project. Oregon State University. Newport, OR.

Turnock, B.J. and W.A. Karp. 1997. Estimation of salmon bycatch in the 1995 pollock fishery in the Bering Sea/Aleutian Islands - A comparison of methods based on observer sampling and counts of salmon retained by fishing vessel and processing plant personnel. An Alaska Fisheries Science Center report prepared for the North Pacific Fishery Management Council, 32 p.

U.S. Department of Labor, Bureau of Labor Statistics. 2002. Injuries, Illnesses, and Fatalities. http://www.bls.gov/iif/home.htm

Walsh, W.A. 2000. Comparison of fish catches reported by fishery observers and in logbooks of Hawaii-based commercial longline vessels. NMFS Southwest Fisheries Science Center, Honolulu Laboratory, Administrative Report H-00-07, 45 p.

Walsh, W.A., P. Kleiber, and M. McCracken. 2002. Comparison of logbook reports of incidental blue shark catch rates of Hawaii-based longline vessels to fishery observer data by application of a generalized additive model. Fisheries Research 58:79-94.

Williams, G.H., C.C. Schmitt, S.H. Hoag, and J.D. Berger. 1989. Incidental catch and mortality of Pacific halibut, 1962-1986. Technical Report 23. 94 p. Available at: http://www.iphc.washington.edu/halcom/pubs/techrep/tech0023.pdf

Appendix 1.

Definition of Bycatch Terms
(from NMFS 1998a)

Bycatch Discarded catch of any living marine resource plus retained incidental catch and unobserved mortality due to a direct encounter with fishing gear.

Discarded catch Living marine resources discarded whole at sea or elsewhere, including those released alive.

Incidental catch Catch that is not part of the targeted catch. This includes retained nontargeted catch and discarded catch. Examples are finfish catch in shrimp fishery that may be sold or kept for personal use, juvenile pollock catch that now must be retained in the Alaska pollock fishery, and seabird catch in the Pacific longline tuna/swordfish fishery that must be discarded.

Target catch Catch of a species, a particular size or sex, or an assemblage of species that is primarily sought in a fishery, such as shrimp in a shrimp fishery or mature female fish in a roe fishery. The definition of targeted catch within a fishery is not static, for example in a multispecies fishery, the mix of species targeted and caught may be quite variable and may change over time.

Total catch Retained catch plus discarded catch.

Landings Portion of the total catch that is brought ashore.

Total fishing-related mortality Mortality of living marine resources due to a direct encounter with fishing gear.

Bycatch mortality* All mortality of living marine resources associated with discarded catch plus unobserved mortality.

Unobserved mortality** Mortality of living marine resources due to a direct encounter with fishing gear that does not result in the capture of that species by a fisherman. This includes mortality due to lost or discarded fishing gear, as well as live releases that subsequently die.

Regulatory discards Catch that is required by regulation to be discarded.

Discretionary discards Catch that is discarded because of undesirable species, size, sex, or quality, or for other reasons, including economic discards as defined in the Magnuson-Stevens Act.

Prohibited species A species for which retention is prohibited in a specific fishery.

Protected species Any species that is subject to special conservation and management measures (e.g., Marine Mammal Protection Act, Endangered Species Act, and Migratory Bird Treaty Act).

Living marine resources Any animal or plant life that spends part of its life in coastal or ocean waters.

*The definition of “bycatch mortality” as published in NMFS 1998a was incomplete and should have read as follows: All mortality of living marine resources associated with discarded catch and retained incidental catch plus unobserved mortality.

**The definition of “unobserved mortality” as published in NMFS 1998a should not have included the phrase “as well as live releases that subsequently die.”

Appendix 2.

A Characterization of the Relationship Between the Precision of the Assessment Components and the Precision of Management Quantities

In order to develop an explanatory and qualitative characterization of the relationship of the precision of components within an assessment with the precision of the management quantities estimated by that assessment, the following approximation was utilized:

$$(CV_{TAC\ or\ PBR})^2 = (CV_{Catch})^2 + (CV_{Fopt/F})^2 + (CV_{Catch})^2\,(CV_{Fopt/F})^2$$

where *Fopt/F* is the ratio of the desired exploitation rate to the present exploitation rate and CV_{catch}. is the precision of the total catch of a stock (not just the bycatch). The precision of the total catch of a stock depends upon the precision of the estimate of bycatch of that stock, the precision of the "other catch" (all the other catch other than bycatch) and the proportion of the total catch of a stock that comes from bycatch ($P_{bycatch}$):

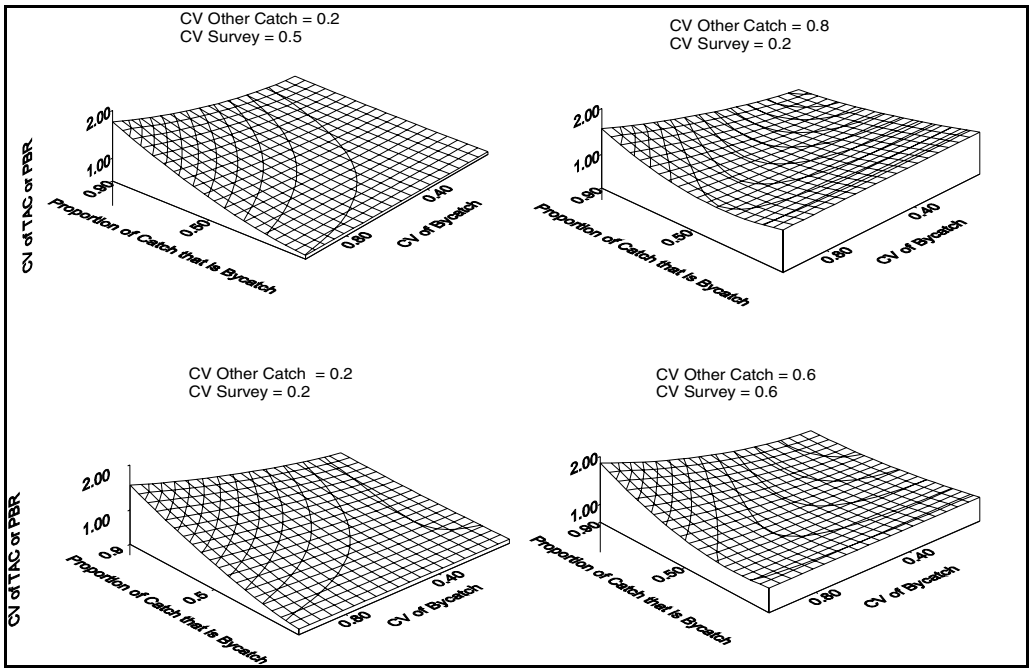

Appendix Figure 2-1. Diagram of hypothetical precision in the estimate of management quantities such as TAC or PBR as a function of the precision of estimates of the catch other than bycatch (other catch), the other assessment information such as survey indices (survey), the CV of bycatch, and the proportion of catch that is bycatch.

$$(CV_{catch})^2 = (CV_{bycatch}\,P_{bycatch})^2 + [CV_{other\ catch}\,(1-P_{bycatch})]^2$$

The precision of the *Fopt/F* ratio can be approximated by

$$(CV_{Fopt/F})^2 = (CV_{Catch})^2 + (CV_{survey})^2 + (CV_{Catch})^2\,(CV_{survey})^2$$

where $(CV_{survey})^2$ is the precision of an arbitrary variable denoting all the factors of an assessment other than catch (e.g., the survey index of abundance). Combining the above equations leaves an expression of the precision of the management quantities as a function of the precision of the assessment, the precision of the bycatch, the precision of the other catch and the proportion of the

catch comprised of bycatch. The relationships given are very broad approximations not meant to be exact. Nevertheless, they provide useful examples for discussions of precision requirements arising from the assessment evaluation of management quantities (see Appendix Figure 2-1).

Appendix 3.

Precision of a Bycatch Estimate of an Aggregate of Species and the Precision of Estimates of Individual Species within the Aggregate

When the bycatch estimate for each species is given by the product of the estimate of total bycatch and the estimate of the proportion of each species contributing to the bycatch, the relationship between the precision of an estimate of bycatch of an individual species and the precision of the estimate of bycatch of the aggregate of all species may be approximated by:

$$(CV_{species})^2 = (CV_{agg})^2 + [(1 - P_{species})/(x_{agg} P_{species})][1 + (CV_{agg})^2]$$

where $P_{species}$ is the proportion of the total aggregate bycatch (agg) that an individual species comprises and CV_{agg} is the precision of the aggregate estimate (x_{agg}). This relationship assumes that proportional encounters are random which often is not the case (i.e., individual species cluster with others of the same species). Therefore, the above relationship may underestimate the *CV* of an individual species in an actual application.

Appendix 4.

Comments on Precision Requirements for Rare-event Species

The same sampling and estimation methods may not be appropriate for all bycatch monitoring programs. Most of the discussions and formulas in this report assume that (1) a normal distribution is appropriate when computing the confidence intervals for the estimated bycatch, (2) an equal probability sample within strata is practical, and (3) the bias of the ratio estimator is negligible. In some fisheries where these assumptions do not hold, the use of the coefficient of variation to specify a precision goal, the estimator, and the sampling design that are discussed in this report are not appropriate. In fisheries in which the bycatch of protected species is extremely rare, this creates problems. Below are more details concerning the guidelines given in this report and the problems faced with the observer programs for these fisheries.

When designing a bycatch monitoring program, it seems that the goal should be either to specify a maximum allowable difference, absolute or relative, between the estimate and the true value and a small probability that the error may exceed the maximum allowable difference or to minimize the cost of obtaining specific criteria with respect to the confidence interval for an estimate of bycatch. To meet either objective the confidence interval, not just the CV, of the estimate needs to be considered.

If using an unbiased estimator with a normal distribution, the CV provides a straightforward measurement related to the distance between the estimate and the upper and lower bound of the confidence interval. However, there are situations when a biased estimator is more efficient than an unbiased estimator (the biased estimator has a smaller mean square error), or it is unreasonable to assume the normal distribution. For example, the bycatch of protected species is extremely rare in the Hawaii longline and bottomfish fisheries. Because of the extreme rarity, even for a large sample of trips, say over 100, the Finite-Central Limit Theorem does not apply and assuming the normal distribution would result in inaccurate confidence intervals (the lower bound of the confidence interval would be a negative number). For the species where bycatch is extremely rare, the distribution of the estimated total is likely not symmetrical, but has a long right-hand tail. In such cases where exceeding allowed takes is a concern, then the focus should be on the distance between the estimate and the upper bound of the confidence interval.

For example, take the loggerhead, leatherback or green sea turtle bycatch in the Hawaiian longline fishery. In order to obtain a CV of between 20% and 30% for these species, sampling of 900 to 1,000 trips (80% to 90% coverage) may be required. Is this worth the expense? If the estimated total bycatch is small, such as five individuals, do we really need to achieve a standard error of 1 to 2 individuals to monitor bycatch? If jeopardy is such a fine line that four turtle takes do not jeopardize the population but five takes do, then 100% coverage may be needed.

Also, CV is undefined if no bycatch is observed and the estimated total bycatch is zero. Not only is there a problem with dividing by zero, but it is unclear how best to estimate the standard error when no bycatch has been observed. The objective of an observer program might be to monitor a protected species bycatch; however, even with 100% coverage, we might not expect to observe *any* bycatch of this species. With what level of uncertainty should we estimate zero bycatch? This should be defined by management.

Appendix 5.

NMFS Objectives, Protocol, and Recommended Precision Goals for Standardized Bycatch Reporting Methodologies

The MSA, ESA, MMPA, and international agreements identify NMFS's stewardship responsibilities to monitor and reduce bycatch. The 1996 amendments to what is now titled the MSA defined the term "bycatch" and required that it be minimized to the extent practicable. Bycatch, as defined by the MSA (16 U.S.C. § 1802 (2)), "means fish which are harvested in a fishery, but which are not sold or kept for personal use, and includes economic discards and regulatory discards. Such a term does not include fish released alive under a recreational catch and release fishery management program." National Standard 9 of the MSA requires that "conservation and management measures shall, to the extent practicable, (A) minimize bycatch and (B) to the extent bycatch cannot be avoided, minimize the mortality of such bycatch" (16 U.S.C. § 1851(9)). Section 303 of the MSA expands on this requirement somewhat, stating that fishery management plans (FMPs) are required to "establish a standardized reporting methodology to assess the amount and type of bycatch occurring in the fishery" (16 U.S.C. § 1853(11)). The MSA requirement for a standardized bycatch reporting methodology (SBRM) for each FMP fishery is intended to address only the bycatch of fish, where "fish" is defined by the MSA to mean "finfish, mollusks, crustaceans, and all other forms of marine animal and plant life other than marine mammals and birds" (16 U.S.C. § 1802(12)).

Based on its stewardship responsibilities defined elsewhere in the MSA and in other laws, including the MMPA and ESA, NMFS believes that: (1) the SBRM for each FMP fishery should address the bycatch of marine mammals and seabirds, as well as fish and sea turtles, and (2) an effective and efficient SBRM should be established for each federally managed fishery and for each other fishery that either takes ESA-listed species that are under NMFS jurisdiction or is an MMPA Category I or II fishery.[5] Such an SBRM will improve the bycatch estimates for each fishery, which will improve both the estimates of total catch and the scientific basis for making the often interdependent decisions concerning the reductions in bycatch to be attained and the methods to be used to attain those reductions.

This document identifies the SBRM objectives, protocol, and recommended precision goals that NMFS has established to meet its stewardship responsibilities for monitoring bycatch. The actions that are being taken by NMFS and the Fishery Management Councils to further reduce bycatch are addressed elsewhere.

NMFS has established the following SBRM objectives:

- The development and documentation of an effective and efficient SBRM for each federally managed fishery and for each other fishery that either takes ESA-listed species that are under NMFS jurisdiction or is an MMPA Category I or II fishery, where the documentation of a SBRM includes the responsibilities of each entity involved in collecting and using data to estimate bycatch or total catch, as well as well-defined goals and objectives with associated performance criteria.
- The periodic review of the SBRM for each of these fisheries.

[5] Category I and II fisheries include both federally and state managed fisheries.

- The development of more effective and efficient methods, including electronic monitoring, for estimating bycatch or total catch.

The combination of data collection and analyses that is used to estimate bycatch in a fishery constitutes the SBRM for that fishery. For example, an at-sea observer program, effort and landings data collection, and analyses to estimate overall bycatch can constitute an SBRM. NMFS, working with the Regional Fishery Management Councils and other management agencies, has implemented some or all of the elements of an SBRM for each federally managed fishery and for each other fishery that either takes ESA-listed species that are under NMFS jurisdiction or is an MMPA Category I or II fishery.

To assist in meeting these objectives, NMFS has established the following protocol for SBRMs:

- Deploy at-sea observers in most cases as part of the preferred method for collecting bycatch data due to the effectiveness of at-sea observer programs.
- Use other at-sea observations technologies (i.e., electronic monitoring) as appropriate to complement observer programs.
- Use the appropriate sampling design as determined by the objectives of and the level and sources of funding for the observer program and other monitoring programs, where the objectives include providing a scientific and statistically valid basis for estimating bycatch or total catch.
- Use the appropriate models for combining observer data with effort, landings, and/or other data to obtain accurate estimates of total bycatch or total catch.
- Use appropriate methods to identify and decrease sources of bias.
- Address the goal of achieving recommended levels of precision (20-30% *CV*) in estimating bycatch or total catch.
- Adhere to standards established by NMFS to ensure the integrity and quality of the data collected in NMFS-approved observer programs, other data that are used in estimating bycatch or total catch, and the resulting estimates of bycatch or total catch.
- Where appropriate, use other monitoring methods for estimating bycatch (e.g., using data from experimental tows, fishery-independent survey data, data from electronic monitoring technology, strandings data, or self-reported data) instead of at-sea observers.
- Emphasize outreach to industry and other constituents and encourage their participation in the development of SBRM goals, objectives and implementation plans.

At-sea observer program sampling designs should be formulated to achieve precision goals for the least amount of observation effort, while also striving to increase accuracy. These designs require the development of appropriate sampling strata and sampling allocation procedures. The overall design of a bycatch monitoring program should address the potential for observer effect bias and recognize that the overall management regime can affect the magnitude of this bias. An observer effect bias exists either if fishing practices change for trips or hauls that are observed or if crew members take actions to prevent accurate catch or bycatch estimates for observed hauls. In some cases, additional compliance resources will be needed to decrease the latter source of bias.

Observer sampling programs are driven by recommended precision goals that address management needs for estimating management quantities such as allowable catches through a stock assessment, for evaluating bycatch relative to a management standard such as allowable take, and for developing mitigation mechanisms. The recommended precision goals for estimates of bycatch are defined in terms of the coefficient of variation (CV) of each estimate.

The recommended precision goals for estimates of bycatch, in general, are as follows:

Protected Species

For marine mammals and other protected species, including seabirds and sea turtles, the recommended precision goal is a 20-30% CV for estimates of bycatch for each species/stock taken by a fishery.

Fishery Resources

For fishery resources, excluding protected species, caught as bycatch in a fishery, the recommended precision goal is a 20-30% CV for estimates of total discards (aggregated over all species) for the fishery; or if total catch cannot be divided into discards and retained catch then the recommended goal for estimates of total catch is a CV of 20-30%.

These CV goals are the levels of precision that NMFS will strive to achieve. However, it is important to recognize that:

- The goals may in some instances exceed minimum statutory requirements.
- There are intermediate steps in increasing precision that may not immediately achieve the goals but that represent progress nonetheless.
- There are circumstances in which higher levels of precision may be desired, particularly when management is needed on fine spatial or temporal scales.
- There are circumstances under which meeting these precision goals would not be an efficient use of public resources.
- Funding and logistical constraints, safety considerations and additional objectives for observer programs may prevent the attainment of these goals.
- When a numeric limit is set for a bycatch species, the uncertainty associated with setting that limit and the methods used for addressing that uncertainty are two of the factors that determine the appropriate CV for the bycatch estimate for that species.
- If CVs of 20-30% for individual fishery species can be obtained and are needed for management, then this precision should be encouraged.
- In some instances decreasing bias (including that caused by the observer effect) will be more important than increasing precision.
- The absolute precision (in numbers of animals) may be more appropriate than the percent precision for some protected species (see Appendix 4 for technical comments on this issue).
- If bycatch is being monitored principally in order to manage a fishery within bycatch limits, an alternative to the above CV goals is to set the bycatch limits based on a management regime that incorporates uncertainty (see Section 5.4).
- Flexibility is needed when setting CV targets for specific fisheries and bycatch species.
- A decision to accept lower precision should be based on analyses and understanding of the implications of that decision.

NMFS recognizes that when there are multiple objectives for an observer program, the objective of better estimates of bycatch or total catch needs to be balanced with other program objectives to obtain an optimal sampling design.

To assist both in establishing an effective and efficient SBRM for each federally managed fishery and for each other fishery that either takes ESA-listed species that are under NMFS jurisdiction or is an MMPA Category I or II fishery and in periodically reviewing the SBRM for each of these fisheries, NMFS will work cooperatively with stakeholders to:

- Identify the appropriate mix of methods to be used to estimate bycatch or total catch;
- Develop the sample design for at-sea observation programs;
- Determine the precision of the estimates of bycatch or total catch;
- Identify and decrease sources of bias, including the observer effect bias; and
- Identify the appropriate sample size(s).

NMFS recognizes that many of the characteristics of an appropriate SBRM will be determined by a variety of factors that are both fishery- and time-specific. Therefore, the SBRMs that result from these cooperative efforts often will differ by fishery and vary over time, and the standards that are established as part of the SBRM protocol will reflect regional and fishery-specific differences.

In many instances, NMFS will establish, review and improve SBRMs collaboratively with the Regional Fishery Management Councils, MMPA Take Reduction Teams, other fishery management agencies, the fishing industry, the environmental community, university or private sector researchers, and other stakeholders. In most cases, a NMFS Regional Office and/or Science Center will take the lead and be principally responsible for implementing the SBRM objectives and protocol for specific fisheries.

The ability of NMFS to improve the SBRMs by implementing its SBRM objectives, protocol and precision goals will depend on the funding and staffing resources that will be available. Therefore, NMFS will pursue adequate, stable and equitable sources of funding for the following: (1) the research and analysis that are necessary to implement a more effective and efficient SBRM for each fishery, and to periodically evaluate each SBRM and determine how to improve it in a cost-effective manner; (2) enhanced bycatch monitoring programs; and, if necessary, (3) additional monitoring methods or compliance resources to address the observer effect bias.

In general, NMFS should be expected to use funds appropriated by Congress or, if authorized, money collected from the fishing industry to pay for the bycatch monitoring required under the MSA, MMPA and ESA.

It is unlikely that adequate funding will be available to immediately identify and implement the appropriate SBRM enhancements for each fishery. Therefore, NMFS will use an efficient and equitable mechanism for allocating the funds that are made available, on a discretionary basis, through the federal budget process. The ability of NMFS to implement these objectives will also depend on how effectively it can use outreach programs to develop better methods for estimating bycatch or total catch and to obtain the assistance of fishermen and other stakeholders in improving these estimates.

In summary, the establishment of these objectives, protocol, and recommended precision goals for SBRMs is an important element of a National Bycatch Strategy that includes improving the bycatch or total catch estimates for each federally managed fishery and for each other fishery that either takes ESA-listed species that are under NMFS jurisdiction or is an MMPA Category I or II fishery in accordance with the requirements of the MSA and the other stewardship

responsibilities of NMFS, while taking into account the substantial differences that occur among fisheries and over time.

Appendix 6.

Acronyms Used in this Report

ABC	acceptable biological catch
ACCSP	Atlantic Coastal Cooperative Statistics Program
AFSC	Alaska Fisheries Science Center
ASMFC	Atlantic States Marine Fisheries Commission
BDTRT	Bottlenose Dolphin Take Reduction Team
BRD	bycatch reduction device
BSAI	Bering Sea/Aleutian Islands area
CPS	coastal pelagic species
CPUE	catch-per-unit-of-effort
CV	coefficient of variation
DGN	drift gillnet
EEZ	Exclusive Economic Zone
EM	electronic monitoring system
ESA	Endangered Species Act
ETP	Eastern Tropical Pacific Ocean
FAO	Food and Agriculture Organization of the United Nations
FIS	Fisheries Information System
FMP	fishery management plan
GAM	generalized additive model
GLM	generalized linear modeling
GOA	Gulf of Alaska
HMS	highly migratory species
IATTC	Inter-American Tropical Tuna Commission
ICCAT	International Commission for the Conservation of Atlantic Tunas
IFQ	individual fishing quota
IPHC	International Pacific Halibut Commission
IPOA	international plan of action
MARFIN	Marine Fisheries Initiative grants programs.
MFMT	maximum fishing mortality rate threshold
MMHSRP	Marine Mammal Health and Stranding Response Program
MMPA	Marine Mammal Protection Act
MRFSS	Marine Recreational Fisheries Statistics Survey
MSA	Magnuson-Stevens Fishery Conservation and Management Act
MSE	mean square error
MSST	minimum stock size threshold
MUS	management unit species
NEFSC	Northeast Fisheries Science Center
NMFS	National Marine Fisheries Service or NOAA Fisheries
NOAA	National Oceanic and Atmospheric Administration
NPFMC	North Pacific Fishery Management Council
NRC	National Research Council
NWFSC	Northwest Fisheries Science Center
NWGB	National Working Group on Bycatch
NWHI	Northwestern Hawaiian Islands
OY	optimum yield
PacFIN	Pacific Fisheries Information Network
PSMFC	Pacific States Marine Fisheries Commission
PBR	potential biological removal
RecFIN	Recreational Fisheries Information Network
RPA	reasonable and prudent alternatives

SBRM	standardized bycatch reporting methodology
S-K	Saltonstall-Kennedy grants programs.
SPR	spawning potential ratio
TAC	total allowable catch
TED	turtle excluder device
TRP	take reduction plan
USCG	United States Coast Guard
USFWS	U.S. Fish and Wildlife Service
VMS	vessel monitoring systems
VTR	vessel trip report
WCGOP	West Coast Groundfish Observer Program
WPFMC	Western Pacific Fishery Management Council