Naval Base Kitsap-Bangor Explosives Handling Wharf 2

Final Year 2 Marine Mammal Monitoring Report (2013–2014)

BANGOR, WASHINGTON

June 2014

Naval Facilities Engineering Command

Prepared by:

HARTCROWSER

Suggested Citation

Department of Navy (DoN), 2014. Naval Base Kitsap at Bangor Explosives Handling Wharf 2, Bangor Washington. Final Year 2 Marine Mammal Monitoring Report. Prepared by Hart Crowser, Inc. for Naval Facilities Engineering Northwest, Silverdale, WA. June 2014.

ACRONYMS AND ABBREVIATIONS

APE	American Piledriving Equipment
BSS	Beaufort sea state
cfm	cubic feet per minute
cm	centimeters
CMP	Construction Monitoring Program
dB	decibel
° F	degrees Fahrenheit
EHW-1	Explosives Handling Wharf #1
EHW-2	Explosives Handling Wharf #2
ESA	Endangered Species Act
ft	foot/feet
ft-lbs	foot-pounds
GPS	global positioning system
IHA	Incidental Harassment Authorization
km	kilometers
km^2	square kilometers
m	meters
MC	monitoring coordinator
MMO	marine mammal observer
MMPA	Marine Mammal Protection Act
mph	miles per hour
NBK	Naval Base Kitsap
NMFS	National Marine Fisheries Service
PPE	personal protective equipment
PSB	Port Security Barrier
re	referenced to
µPa	micropascal
TPP	Test Pile Program
WRA	Waterfront Restricted Area

Table of Contents

ACRONYMS AND ABBREVIATIONS..... INSIDE FRONT COVER
SECTION 1 INTRODUCTION.....3
SECTION 2 METHODS.....3
SECTION 3 RESULTS.....26
SECTION 4 RECOMMENDATIONS.....50
SECTION 5 LIST OF PREPARERS.....51
SECTION 6 REFERENCES.....51

Tables

Table 1. Project Staff 6
Table 2. Summary of Construction Monitoring Effort 9
Table 3. Total Number of Unique Animals and Sightings by Species (Primary Surveys).....27
Table 4. Total Number of Unique Animals and Sightings by Species (Non-Primary Surveys) 30
Table 5. Summary of Unique Marine Mammal Sightings during Pile Installation and Removal Activities (Primary Surveys) 31
Table 6. Summary of Observed Level B Harassment Takes (includes resightings) 32
Table 7. Summary of Observed Level B Harassment Takes Per Production Pile.....33
Table 8. Extrapolated Level B Harassment Takes in the Unmonitored Area of the Behavioral Harassment Zone.....34
Table 9. Summary of Observed and Extrapolated Level B Harassment Takes.....34
Table 10. Marine Mammal Mitigation Delays and Shutdowns.....36
Table 11. Sightings Following 10 February 2014 Spill.....46

Figures

Figure 1. Vicinity Map.....4
Figure 2. Project Area.....5
Figure 3. Typical Observer Monitoring Platforms during Marine Mammal Monitoring.....8
Figure 4. Marine Mammal Monitoring Zones for Impact and Vibratory Pile Driving 15
Figure 5. Modeled Vibratory Harassment Zone for Marine Mammals.....17
Figure 6. Year 2 Production Pile Locations.....23
Figure 7. All California Sea Lion Sightings 28
Figure 8. All Harbor Seal Sightings.....29
Figure 9a. Sightings by Sea State 38

Figure 9b. Sightings by Weather Condition 38
Figure 10a. California Sea Lion Behaviors Before, During and After Construction: Primary.....40
Figure 10b. California Sea Lion Behaviors By Construction Type: Primary.....40
Figure 11a. Harbor Seal Behaviors Before, During and After Construction: Primary.....41
Figure 11b. Harbor Seal Behaviors By Construction Type: Primary.....41
Figure 12. Marine Mammal Behaviors: Non-Primary Based Surveys.....42
Figure 13. Relative Motion of Marine Mammals by Construction Event.....43
Figure 14. Average Air and Water Temperatures in the WRA 48
Figure 15. Wind Speed in the WRA 49

Appendices

A. Department of the Navy Trident Support Facilities Explosives Handling Wharf (EHW-2) Final Marine Mammal Monitoring Plan
B. All In-Water Noise-Producing Events during the Year 2 EHW-2 CMP
C. Marine Mammal Sighting Form and Data Codes
D. Pile Survey Table
E. Bubble Curtain and Bubble Pile Specifications
F. Marine Mammal Sightings
G. Weather Conditions

Section 1 Introduction

This report summarizes the Year 2 marine mammal monitoring effort implemented for the Trident Support Facilities Explosives Handling Wharf #2 (EHW-2) Construction Monitoring Program (CMP) that occurred from 16 July 2013 to 15 February 2014 at Naval Base Kitsap (NBK) at Bangor. The purpose of the EHW-2 CMP is to provide marine mammal and marbled murrelet monitoring during pile installation required to construct the new wharf (DoN 2012).

Discussion of the Year 1 EHW-2 CMP, which occurred from 28 September 2012 to 14 February 2013, is presented in a separate report (DoN 2013). Marine mammal monitoring for the Year 2 EHW-2 CMP occurred from 16 July 2013 to 15 February 2014. Work consisted of marine mammal monitoring during EHW-2 pile driving activities with impact and vibratory hammers.

The marine mammal monitoring performed for this project was intended to meet all requirements of applicable permits and consultations in order to ensure compliance with the Marine Mammal Protection Act (MMPA) permit and Endangered Species Act (ESA). Marine mammal monitoring performed for this project followed procedures and requirements in the EHW-2 Marine Mammal Monitoring Plan (Monitoring Plan; **Appendix A**). The Monitoring Plan was developed in coordination with the National Marine Fisheries Service (NMFS) to ensure compliance with the terms and conditions of the Incidental Harassment Authorization (IHA) issued for in-water construction (NMFS 2013). The Monitoring Plan included the requirement that a marine mammal monitoring report be prepared and submitted to the Navy. This document is meant to satisfy that reporting requirement.

Section 2 Methods

Project Area

NBK at Bangor, Washington is located on the Hood Canal approximately 20 miles (32.2 kilometers [km]) due west of Seattle, Washington (**Figure 1**). NBK at Bangor provides berthing and support services to U.S. Navy submarines and other fleet assets. The EHW-2 site was located within the Waterfront Restricted Area (WRA) at NBK at Bangor, immediately south of the existing Explosives Handling Wharf #1 (EHW-1) structure (**Figure 2**). Marine mammal

monitoring was focused within this area and the waters immediately adjacent to the WRA, where sound pressure levels associated with pile installation and removal activities could potentially be transmitted at levels that could affect marine mammals.

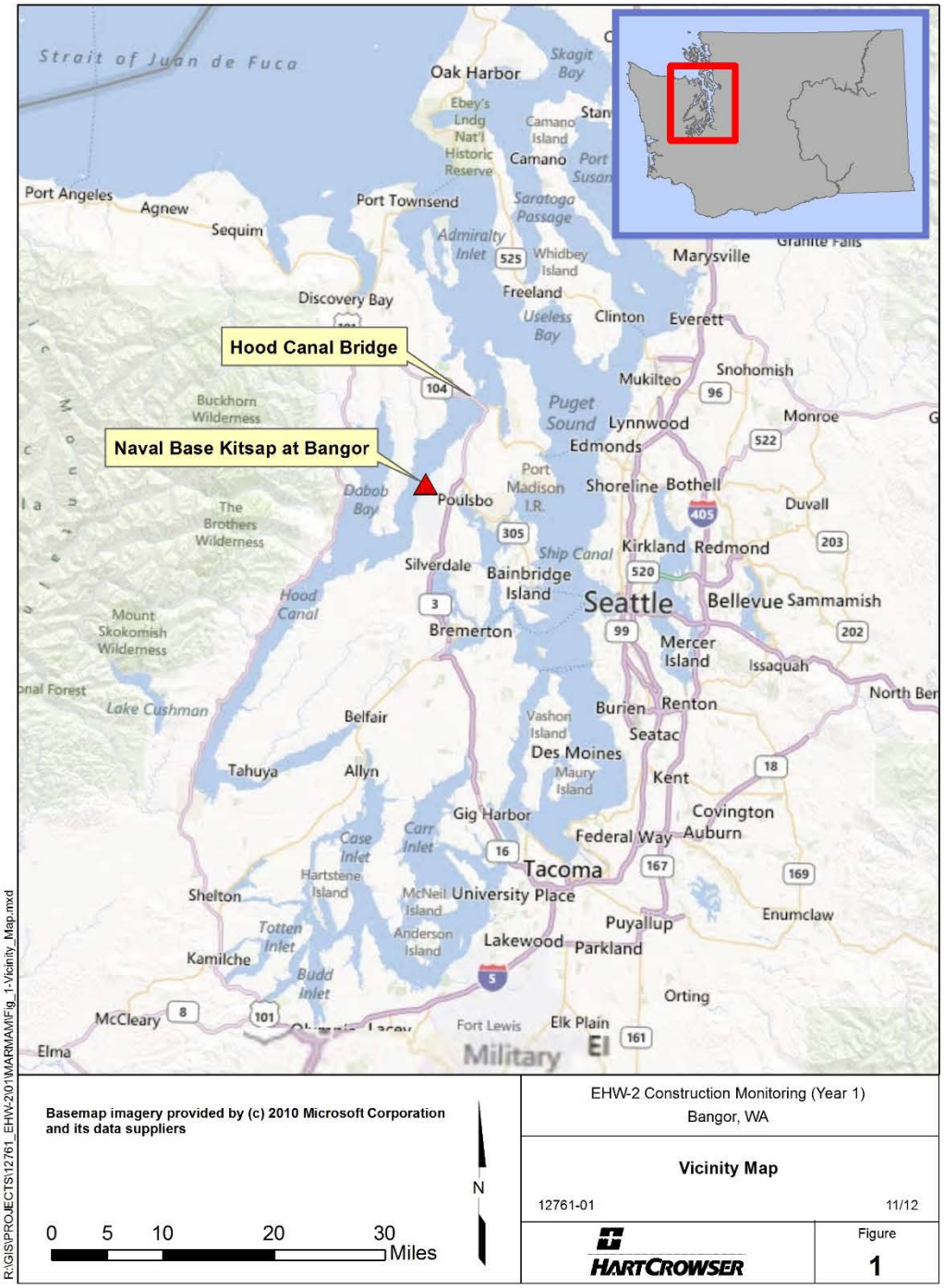

Figure 1. Vicinity Map

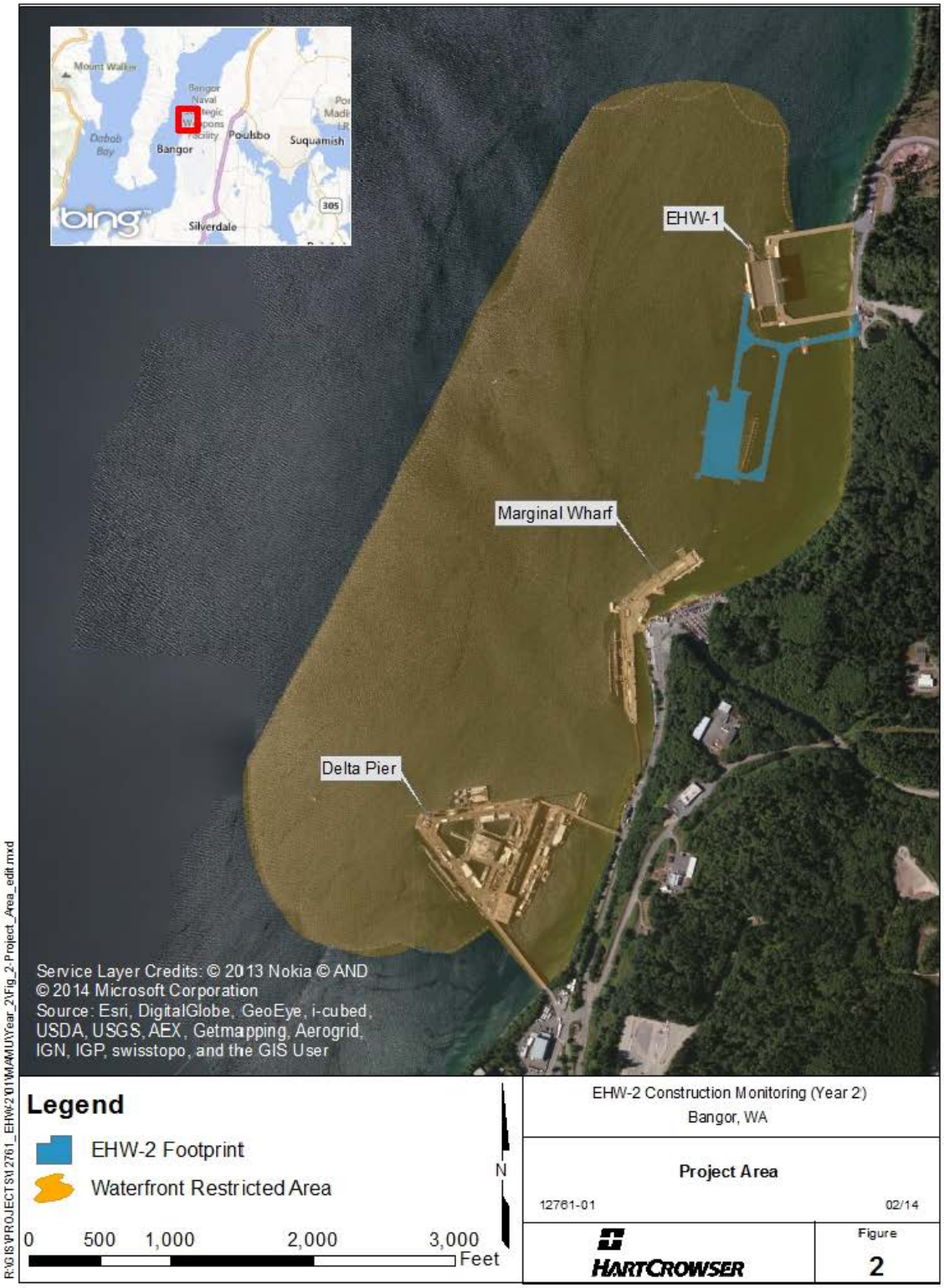

Figure 2. Project Area

Project Staffing

Staff for the Year 2 EHW-2 CMP (**Table 1**) included the Project Managers, the Monitoring Coordinators (MC), Marbled Murrelet Observers, and Marine Mammal Observers (MMOs). All MCs and MMOs were experienced in marine mammal identification, and had extensive knowledge of the biology and behavior of locally occurring marine species. With few exceptions, all MCs and MMOs had been observers for one or more of the following previous marine mammal monitoring efforts at Bangor: (1) the 2011 Test Pile Program (TPP) for NBK at Bangor, (2) the 2011/2012 EHW-1 Pile Replacement Project, and (3) the Year 1 EHW-2 CMP monitoring efforts. All marine mammal observers were dedicated to that task and served no other function while conducting observations.

Table 1. Project Staff

Name	Role(s)	Company
Hans Hurn	Project Manager / MC	Hart Crowser
Jeff Barrett	Project Manager / MC	Hart Crowser
Caanan Cowles	MC	Hart Crowser
Emily Duncanson	MC	Hart Crowser
Jim Starkes	MC	Hart Crowser
Michelle Havey	MC	Hart Crowser
Beth Sosik	MMO	Hart Crowser
Diane Hennessey	MMO	Hart Crowser
Dana Spontak	MMO	HDR
Jamey Selleck	MMO	Hart Crowser
Jim Shannon	MMO	Hart Crowser
Kelsey Donahue	MMO	Hart Crowser
Kerry Hosken	MMO	Hart Crowser
Nick Galvin	MMO	Hart Crowser
Maria Sandercock	MMO	Hart Crowser
Paula von Weller	MMO	Hart Crowser
Pete Heltzel	MMO	Hart Crowser
Stephanie Hawks-Johnson	MMO	Hart Crowser
Steve Hall	MMO	Hart Crowser
Suzanne Faubl	MMO	Hart Crowser

Marine Mammal Monitoring Platforms

The Monitoring Plan required that MMOs be positioned at the best practicable vantage points, taking into consideration security, safety, and space limitations on the waterfront. A minimum of two monitors were used for marine mammal monitoring (one MC dedicated to monitor the shutdown zone and one boat-based monitor focused on observations on the buffer zone; **Figure 3**). Typically, the MC was stationed with a supplementary MMO to provide additional monitoring of the shutdown zone from the barge. This allowed the MC to effectively coordinate with observers and the pile driving foreman. Additional MMOs were used to monitor the shutdown zone as needed. For example, if more than one pile was being driven simultaneously; additional MMOs were assigned to observe the shutdown zone of each pile.

Vessel-based Monitoring. Vessels were used as observation platforms and for transportation to pile driving barges. The Year 2 EHW-2 CMP included one 32-foot (9.8-meter [m]) fiberglass-hulled Bayliner, which was used daily as the primary monitoring platform for the single MMO conducting surveys of the buffer zone. A 26-foot tugboat and several other smaller vessels were used for transportation of personnel and equipment when navigation or barge access was difficult, and when maintenance of the primary Bayliner was necessary. Vessels were equipped with VHF radios and depth sounders. All captains were United States Coast Guard-certified and were familiar with the Puget Sound waterways and the unique characteristics of the region. MMO monitoring vessels were equipped with elevated observation platforms, which provided maximum viewing capability. The MMO monitoring vessels' observation platforms were approximately 3 to 4 m (9.8 to 13.1 feet [ft]) above the water line.

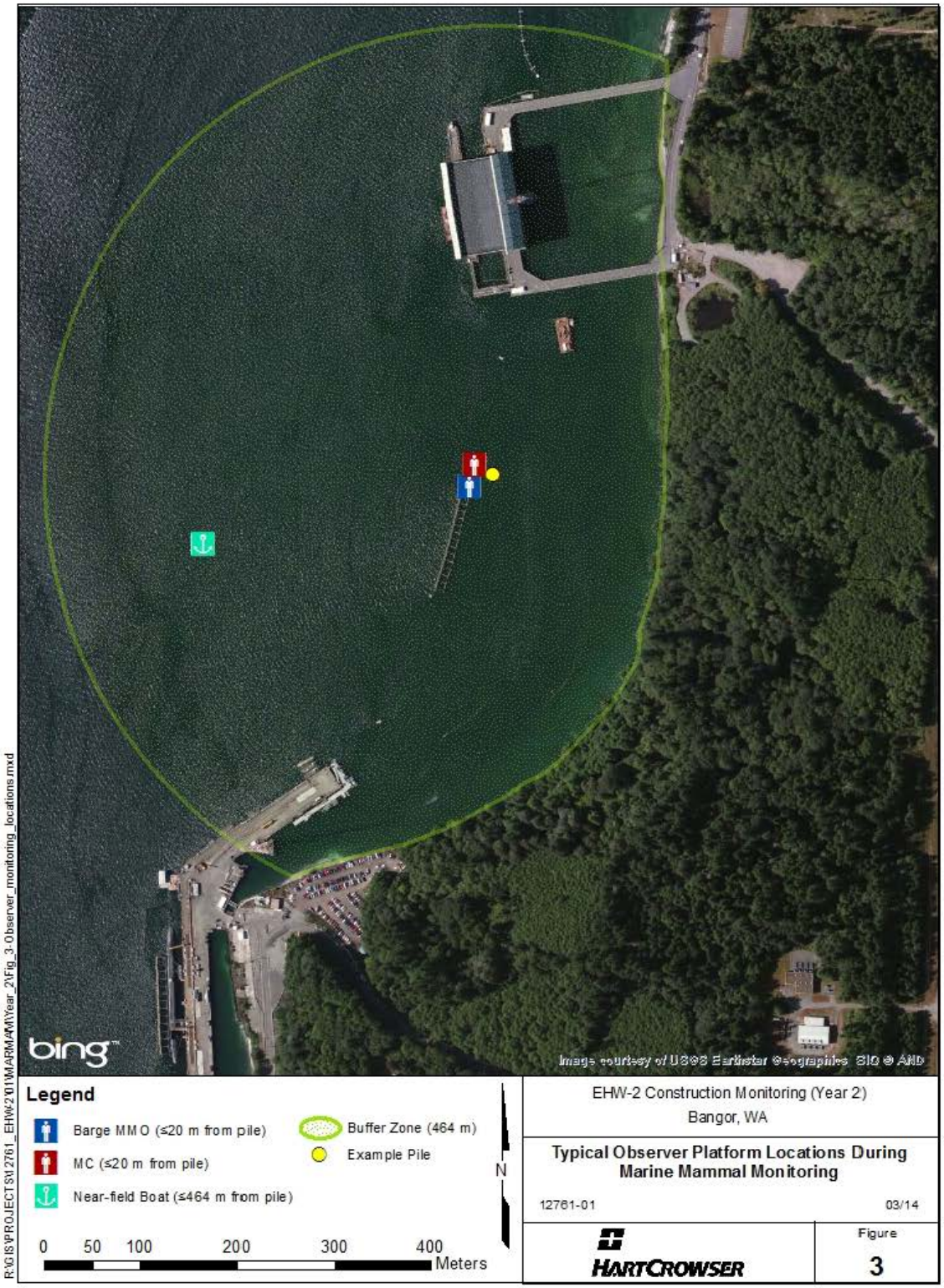

Figure 3. Typical Observer Monitoring Platforms during Marine Mammal Monitoring

Pier- and Barge-based Monitoring. The MC was typically located on the construction barge, and served as an additional marine mammal observer as needed from that relatively stationary location. The MC was typically 5–20 m (16–66 ft) from the pile, and at all times had a view of most of the shutdown zone. Since the MC typically served as an additional marine mammal observer to compliment the boat- and barged-based MMOs required by the protocol, the MCs were not required to have full observation of the shutdown zone at all times. However, during instances where two pile driving rigs were running simultaneously, the MC was positioned to provide full coverage of the shutdown zone of one of the operating rigs, while the barge-based MMO monitored the shutdown zone of the second operating rig. During these instances, the barge-based MMO was given full shutdown authority and therefore was able to initiate immediate shutdown when necessary. The MC position was in close proximity to the construction foreman or in the foreman's line-of-sight, and each pile driving event was communicated between the foreman and MC. The MC would transmit the pile specifications and other details to the observers and vessel captains, all of whom monitored the same radio channel. The MC logged pile driving times and related construction activities for each pile (**Appendix B**). This served as the basis for data quality control of marine mammal sightings.

Monitoring Summary

In total, 1,247 hours and 27 minutes of marine mammal surveys were conducted on 162 construction days during the course of the Year 2 EHW-2 CMP (**Table 2**). The monitoring times listed in **Table 2** represent the monitoring duration for a given construction day, which consisted of periods of both active pile driving activity and periods without construction (i.e., between pile driving events).

Table 2. Summary of Construction Monitoring Effort

Date	Start Time (hh:mm)	End Time (hh:mm)	Total Time (hh:mm)
7/18/2013	7:00 AM	9:15 AM	2:15
7/19/2013	7:20 AM	2:30 PM	7:10
7/22/2013	9:00 AM	5:00 PM	8:00
7/23/2013	8:15 AM	4:44 PM	8:29
7/24/2013	8:50 AM	4:38 PM	7:48
7/25/2013	7:39 AM	6:35 PM	10:56
7/26/2013	7:35 AM	5:28 PM	9:53
7/27/2013	7:40 AM	4:49 PM	9:09

Date	Start Time (hh:mm)	End Time (hh:mm)	Total Time (hh:mm)
7/29/2013	8:30 AM	5:00 PM	8:30
7/30/2013	9:00 AM	5:14 PM	8:14
7/31/2013	8:05 AM	5:26 PM	9:21
8/1/2013	7:41 AM	6:06 PM	10:25
8/2/2013	8:22 AM	5:22 PM	9:00
8/3/2013	7:15 AM	2:18 PM	7:03
8/5/2013	7:40 AM	4:57 PM	9:17
8/6/2013	7:31 AM	4:28 PM	8:57
8/7/2013	7:23 AM	5:03 PM	9:40
8/8/2013	7:25 AM	5:12 PM	9:47
8/9/2013	7:25 AM	5:32 PM	10:07
8/12/2013	7:51 AM	4:34 PM	8:43
8/13/2013	7:13 AM	4:55 PM	9:42
8/14/2013	7:19 AM	5:21 PM	10:02
8/15/2013	7:30 AM	5:21 PM	9:51
8/16/2013	7:17 AM	3:36 PM	8:19
8/19/2013	7:20 AM	5:32 PM	10:12
8/20/2013	7:30 AM	4:40 PM	9:10
8/21/2013	8:21 AM	4:42 PM	8:21
8/22/2013	7:00 AM	4:40 PM	9:40
8/26/2013	7:20 AM	5:23 PM	10:03
8/27/2013	7:20 AM	2:55 PM	7:35
8/28/2013	8:00 AM	4:47 PM	8:47
8/29/2013	8:00 AM	4:37 PM	8:37
8/30/2013	7:48 AM	3:53 PM	8:05
9/3/2013	8:56 AM	4:27 PM	7:31
9/4/2013	7:50 AM	4:22 PM	8:32
9/5/2013	8:35 AM	5:47 PM	9:12
9/6/2013	7:35 AM	4:54 PM	9:19
9/9/2013	9:55 AM	5:44 PM	7:49
9/10/2013	10:00 AM	6:10 PM	8:10
9/11/2013	7:50 AM	5:12 PM	9:22
9/12/2013	8:00 AM	5:06 PM	9:06
9/13/2013	8:44 AM	5:23 PM	8:39
9/16/2013	9:04 AM	4:27 PM	7:23
9/17/2013	7:40 AM	4:24 PM	8:44
9/18/2013	7:40 AM	4:37 PM	8:57
9/19/2013	7:40 AM	3:30 PM	7:50
9/23/2013	8:25 AM	4:48 PM	8:23
9/24/2013	7:40 AM	5:39 PM	9:59
9/25/2013	7:58 AM	4:53 PM	8:55
9/26/2013	7:58 AM	4:58 PM	9:00
9/27/2013	1:05 PM	3:57 PM	2:52
9/28/2013	8:00 AM	10:45 AM	2:45
9/30/2013	9:08 AM	4:46 PM	7:38
10/1/2013	7:30 AM	5:12 PM	9:42

Date	Start Time (hh:mm)	End Time (hh:mm)	Total Time (hh:mm)
10/2/2013	7:30 AM	3:48 PM	8:18
10/3/2013	8:00 AM	3:57 PM	7:57
10/4/2013	7:46 AM	5:35 PM	9:49
10/7/2013	9:46 AM	5:35 PM	7:49
10/8/2013	7:45 AM	4:48 PM	9:03
10/9/2013	9:15 AM	5:38 PM	8:23
10/10/2013	8:30 AM	6:00 PM	9:30
10/11/2013	7:45 AM	5:59 PM	10:14
10/12/2013	7:05 AM	2:00 PM	6:55
10/14/2013	8:00 AM	4:00 PM	8:00
10/15/2013	8:00 AM	6:33 PM	10:33
10/16/2013	8:00 AM	3:30 PM	7:30
10/17/2013	9:13 AM	5:20 PM	8:07
10/18/2013	8:45 AM	6:06 PM	9:21
10/19/2013	11:20 AM	5:15 PM	5:55
10/21/2013	10:45 AM	5:25 PM	6:40
10/22/2013	8:40 AM	6:11 PM	9:31
10/23/2013	10:30 AM	6:14 PM	7:44
10/24/2013	12:30 PM	5:32 PM	5:02
10/25/2013	8:20 AM	5:28 PM	9:08
10/26/2013	8:16 AM	6:09 PM	9:53
10/29/2013	10:45 AM	6:09 PM	7:24
10/30/2013	8:30 AM	5:57 PM	9:27
10/31/2013	8:15 AM	4:54 PM	8:39
11/1/2013	8:15 AM	5:45 PM	9:30
11/4/2013	8:45 AM	5:08 PM	8:23
11/5/2013	7:15 AM	5:20 PM	10:05
11/6/2013	8:15 AM	4:38 PM	8:23
11/8/2013	8:30 AM	12:35 PM	4:05
11/9/2013	8:20 AM	5:01 PM	8:41
11/11/2013	7:54 AM	4:44 PM	8:50
11/12/2013	8:01 AM	5:23 PM	9:22
11/13/2013	8:04 AM	4:05 PM	8:01
11/14/2013	8:30 AM	5:01 PM	8:31
11/15/2013	8:00 AM	3:50 PM	7:50
11/16/2013	8:00 AM	4:23 PM	8:23
11/18/2013	9:00 AM	3:52 PM	6:52
11/19/2013	8:15 AM	3:28 PM	7:13
11/20/2013	8:05 AM	3:52 PM	7:47
11/21/2013	8:37 AM	3:05 PM	6:28
11/22/2013	10:00 AM	3:20 PM	5:20
11/23/2013	7:45 AM	2:49 PM	7:04
11/25/2013	9:00 AM	1:43 PM	4:43
11/26/2013	10:45 AM	2:05 PM	3:20
11/27/2013	2:20 PM	3:37 PM	1:17
12/2/2013	10:10 AM	1:39 PM	3:29

Date	Start Time (hh:mm)	End Time (hh:mm)	Total Time (hh:mm)
12/3/2013	10:11 AM	3:00 PM	4:49
12/4/2013	8:15 AM	3:27 PM	7:12
12/5/2013	8:15 AM	4:00 PM	7:45
12/6/2013	8:30 AM	3:15 PM	6:45
12/7/2013	8:20 AM	12:35 PM	4:15
12/9/2013	12:30 PM	3:50 PM	3:20
12/10/2013	8:33 AM	3:20 PM	6:47
12/11/2013	8:48 AM	2:42 PM	5:54
12/12/2013	8:30 AM	3:30 PM	7:00
12/13/2013	8:10 AM	2:20 PM	6:10
12/14/2013	9:20 AM	3:30 PM	6:10
12/16/2013	1:30 PM	4:03 PM	2:33
12/17/2013	10:10 AM	4:03 PM	5:53
12/18/2013	9:10 AM	3:33 PM	6:23
12/19/2013	7:55 AM	4:22 PM	8:27
12/21/2013	8:15 AM	3:58 PM	7:43
12/23/2013	8:27 AM	12:06 PM	3:39
12/23/2013	12:07 PM	4:28 PM	4:21
12/24/2013	8:11 AM	11:37 AM	3:25
12/27/2013	8:30 AM	3:17 PM	6:47
12/28/2013	8:00 AM	4:30 PM	8:30
12/30/2013	9:00 AM	2:30 PM	5:30
12/31/2013	8:00 AM	2:42 PM	6:42
12/31/2013	11:01 AM	1:47 PM	2:46
1/2/2014	8:25 AM	4:38 PM	8:13
1/3/2014	8:30 AM	3:16 PM	6:46
1/4/2014	8:30 AM	3:48 PM	7:18
1/6/2014	1:45 PM	2:15 PM	0:30
1/7/2014	9:01 AM	3:18 PM	6:17
1/8/2014	8:05 AM	2:17 PM	6:12
1/9/2014	8:05 AM	5:08 PM	9:03
1/10/2014	8:05 AM	3:34 PM	7:29
1/12/2014	9:00 AM	2:27 PM	5:27
1/13/2014	11:45 AM	4:01 PM	4:16
1/14/2014	8:30 AM	4:53 PM	8:23
1/15/2014	7:45 AM	4:57 PM	9:12
1/16/2014	10:00 AM	4:35 PM	6:35
1/17/2014	9:20 AM	5:06 PM	7:46
1/18/2014	8:10 AM	4:49 PM	8:39
1/20/2014	8:15 AM	2:34 PM	6:19
1/21/2014	8:10 AM	4:12 PM	8:02
1/22/2014	8:00 AM	4:58 PM	8:58
1/23/2014	7:58 AM	4:18 PM	8:20
1/24/2014	8:45 AM	4:34 PM	7:49
1/25/2014	8:15 AM	5:00 PM	8:45
1/26/2014	8:10 AM	1:30 PM	5:20

Date	Start Time (hh:mm)	End Time (hh:mm)	Total Time (hh:mm)
1/27/2014	8:10 AM	4:08 PM	7:58
1/28/2014	8:18 AM	4:55 PM	8:37
1/29/2014	9:07 AM	4:37 PM	7:30
1/30/2014	8:15 AM	5:32 PM	9:17
1/31/2014	8:00 AM	5:02 PM	9:02
2/1/2014	8:00 AM	5:39 PM	9:39
2/3/2014	8:11 AM	12:15 PM	4:04
2/4/2014	8:20 AM	4:36 PM	8:16
2/5/2014	8:20 AM	5:42 PM	9:22
2/6/2014	8:50 AM	5:30 PM	8:40
2/7/2014	7:45 AM	5:08 PM	9:23
2/8/2014	7:40 AM	5:16 PM	9:36
2/10/2014	8:15 AM	3:40 PM	7:25
2/13/2014	7:15 AM	5:46 PM	10:31
2/14/2014	7:00 AM	4:54 PM	9:54
2/15/2014	7:00 AM	3:22 PM	8:22
TOTAL			**1247:27:48**

Monitoring Zones

The analysis of TPP and Year 1 EHW-2 CMP acoustic data (Illingworth and Rodkin 2013), and modeling results (presented within the Environmental Assessment, Biological Assessment, and the IHA) were used to develop the shutdown and buffer zones for pile installation and removal activities associated with the EHW-2 CMP. While the acoustic zones of influence varied among the different diameter piles and types of installation and removal methodologies, shutdown and buffer zones were based on the maximum zone of influence for all pile installation and removal activities. Monitoring of these zones and the implementation of other minimization measures, such as the use of sound attenuation devices, were designed to reduce the impacts of underwater sound from pile driving and removal on marine mammals.

Shutdown Zone. The shutdown zone included all areas where the underwater sound pressure levels were anticipated to equal or exceed the Level A (injury) Harassment criteria for marine mammals (180 decibels referenced to 1 micropascal [dB re 1 μPa] isopleths for cetaceans; 190 dB re 1μPa isopleths for pinnipeds). For vibratory pile installation and removal, monitors enforced a 10-m (32.8-ft) shutdown zone, which encompassed the Level A Harassment zones for cetaceans and pinnipeds (**Figure 4**). For impact pile installation, monitors enforced a 20-m

(65.6-ft) shutdown zone for pinnipeds and an 85-m (278.9-ft) shutdown zone for cetaceans **(Figure 4**). The 10-m shutdown zone was also monitored during other activities with the potential to affect marine mammals, including movement of a barge to the pile location, and the removal or insertion of a pile from the water column via a crane ("dead pull" and "stabbing," respectively).

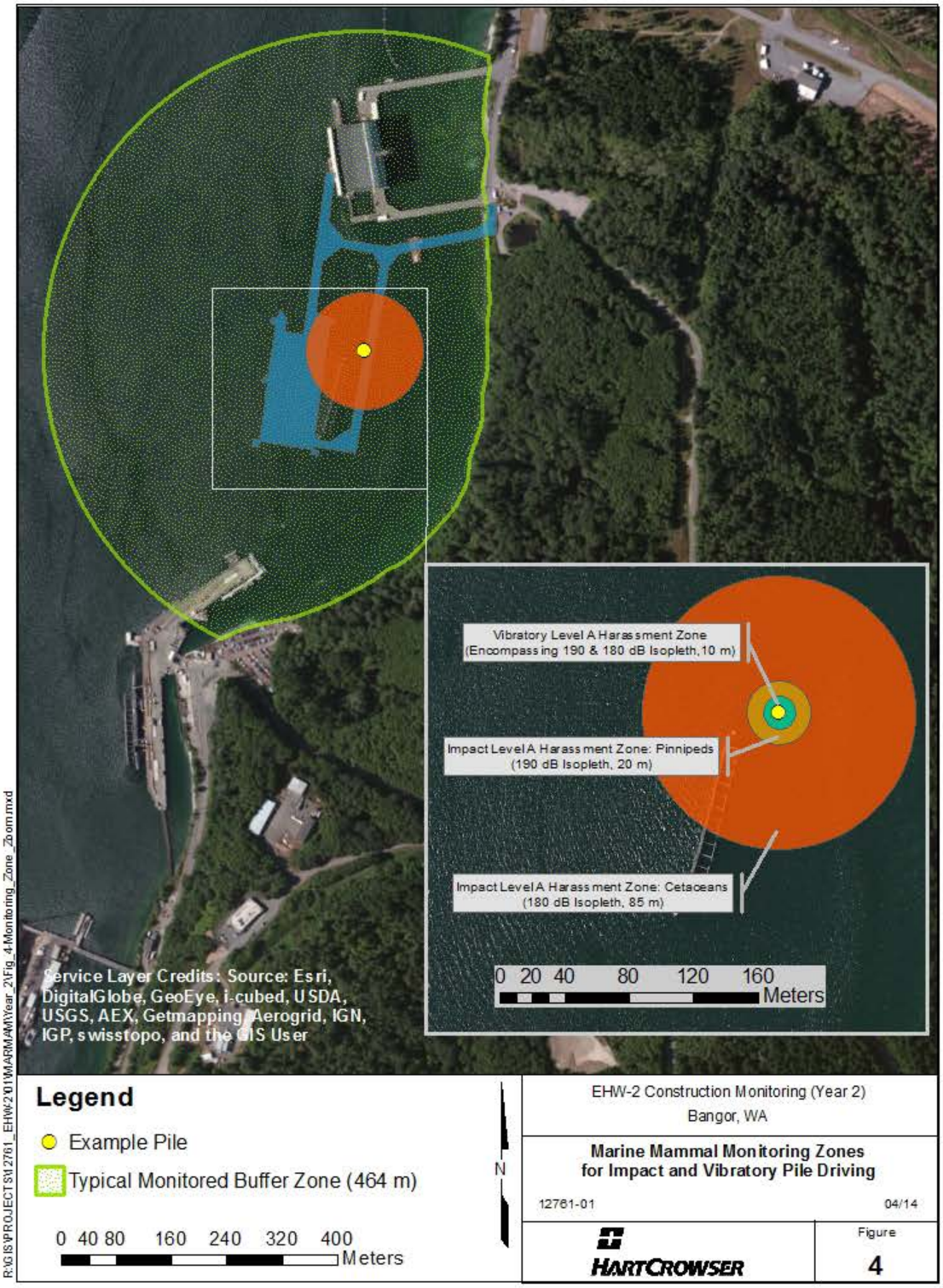

Figure 4. Marine Mammal Monitoring Zones for Impact and Vibratory Pile Driving

Buffer Zone. Although a buffer zone (Level B harassment, 120 dB isopleth) for vibratory pile removal was predicted to have an area of 41.4 square kilometers (km^2; 16.0 square miles), monitoring an area of that size would have been impractical (**Figure 5**). Instead, MMOs used the NMFS-approved 464-m (1522-ft)-radius buffer zone (160 dB isopleth) as a guideline for placement of marine mammal monitoring platforms during vibratory pile driver activity (**Figure 4**; DoN 2012). However, since all MMOs were aware that the disturbance zone extends beyond the 464-m area, all identifiable marine mammals, regardless of whether inside or outside the 464-m zone, were recorded.

Observer Monitoring Locations

In order to monitor buffer and shutdown zones, MMOs were positioned at various vessel-, pier-, and land-based vantage points, taking into consideration security, safety, and space limitations at the NBK at Bangor waterfront (**Figure 3**). One monitoring vessel was positioned inside the WRA. MMOs also frequently monitored the shutdown zone from the construction barge. The MC was stationed with a supplementary MMO to provide additional monitoring of the shutdown zone from the barge. This allowed the MC to effectively coordinate with observers and the pile driving foreman. Additional MMOs were placed on barges to monitor the shutdown zone as needed. For example, if more than one pile was being driven simultaneously, additional MMOs were assigned to observe the shutdown zone of each pile.

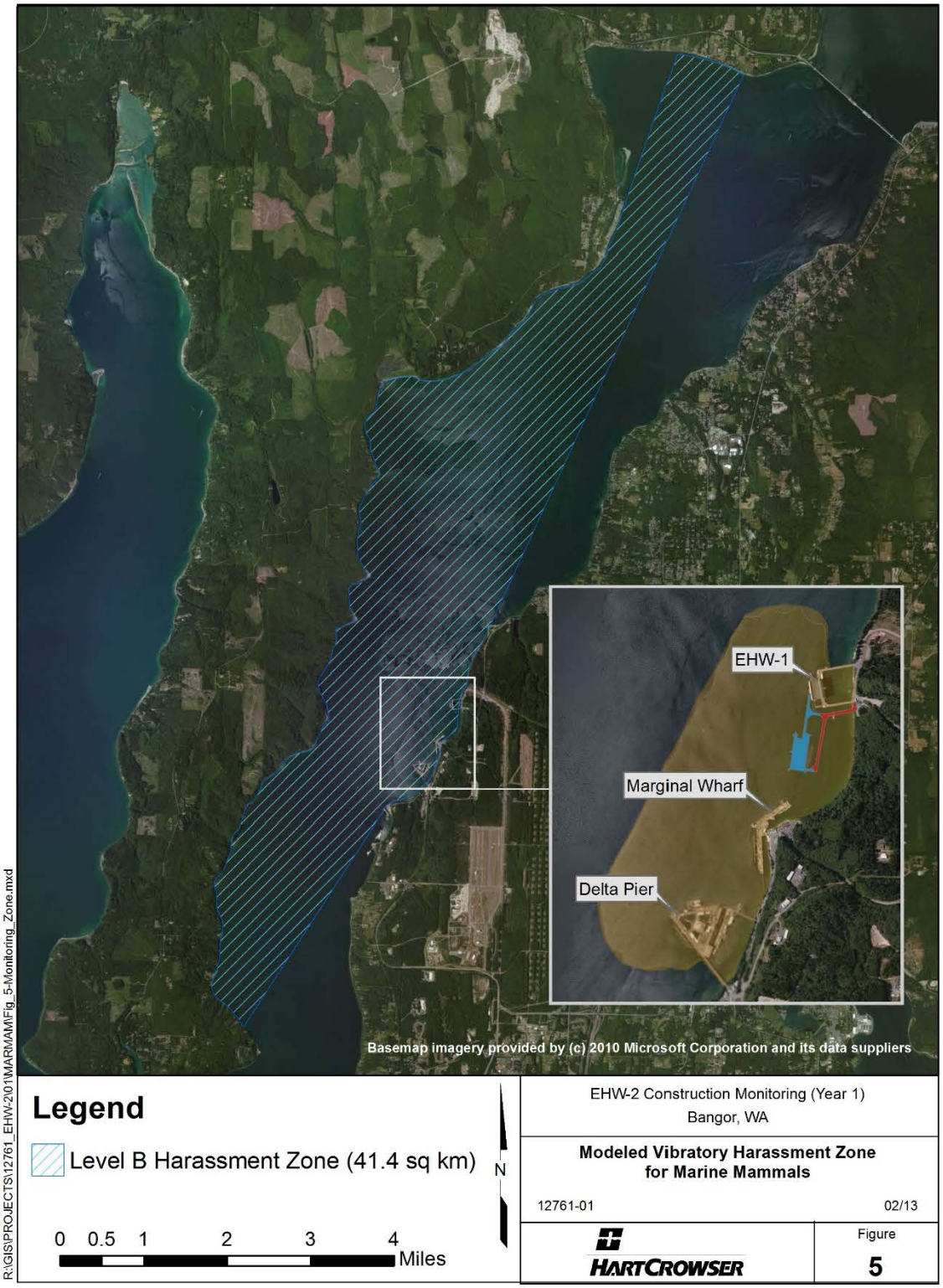

Figure 5. Modeled Vibratory Harassment Zone for Marine Mammals

Monitoring Techniques

Pile installation and removal activities occurred intermittently throughout each construction day. In order to best characterize marine species occurrence and behavior in the area, MMOs surveyed throughout the day, regardless of whether or not pile driving was occurring at that time. Therefore, data gathered on construction days includes observations made during construction and non-construction periods. Construction monitoring began at least 15 minutes prior to the initiation of pile driving (pre-construction monitoring) and ended at least 30 minutes after completion of all pile driving (post-construction monitoring). Observers recorded time, number of animals, behavior, distance and bearing to the animal(s), and distance to pile for each sighting using the standardized Marine Mammal Sightings form (**Appendix C**). This form was digitally reproduced for the beginning of production pile driving, allowing MMOs to enter data directly into a database using handheld tablet computers. A sheet of data codes was supplied to each MMO as a reference to project-specific codes for construction type, weather, and marine mammal species and behavior (**Appendix C**). At the end of each day, all digitized sightings underwent a rigorous quality control process before being appended to the primary database. Other standard MMO equipment included personal protective equipment (PPE), binoculars with rangefinders, a GPS unit, a VHF radio, a clipboard, and a marine mammal identification guide. The required PPE for all observers while on site was a personal flotation device, hardhat, steel toe boots, gloves, and hearing and eye protection.

To minimize the probability of multiple observers counting a single animal (and thereby potentially overestimating takes), sightings were tracked on a continuous basis by an observer on one monitoring platform, and then “handed off” to an observer on a second vessel if the animal(s) headed in the direction of the second monitoring platform. Observers kept detailed sighting data and, whenever possible, indicated in their field notes if an animal was a re-sight.

Every attempt was made to protect marine mammals from Level A (injury) Harassment via the use of sound attenuation devices and continuous monitoring of the behavioral harassment and near-field injury zones. Monitoring coverage of the entire Level A shutdown zone was consistently excellent. It was not always possible to have 100% coverage of the Level B (behavioral) harassment zone during vibratory pile driving/removal due to the large area, the

presence of construction barges and vessels, and the limited number of monitoring vessels. The efficacy of visual detection of marine mammals depended on several factors, including the observer's ability to detect the animal, the environmental conditions (visibility and sea state), and the position of the monitoring platforms. Pile driving was not initiated until the shutdown zone was clear of marine mammals. In addition, pile driving was halted when a marine mammal was sighted within or approaching the shutdown zone during pile driving activities.

Visual Monitoring Protocol

Pre-Construction Monitoring. Prior to the start of pile operations, the shutdown and buffer zones were monitored for at least 15 minutes to document the presence of marine mammals. The following monitoring methodology was implemented prior to commencing pile installation/ removal activities:

- MMOs monitored the shutdown zone and buffer zones. They ensured that no marine mammals were seen within the shutdown zone before pile driving began.
- If marine mammals were present within or approaching the shutdown zone prior to pile driving, monitoring continued and the start of pile driving was delayed until the animals left the shutdown zone voluntarily and had been visually confirmed beyond the shutdown zone, or if 15 minutes had elapsed without re-detection of the animal.
- If marine mammals were not within the shutdown zone (i.e., if the zone was deemed clear of marine mammals), the observers radioed the Monitoring Coordinator who then notified the pile driving foreman that pile driving could commence.
- If marine mammals were detected within the buffer zone, pile driving and removal or other in-water construction activities (activities not involving a pile driver, but having the potential to affect marine mammals; e.g., "stabbing" the pile) were not delayed, but observers monitored and documented the behavior of marine mammals that remained in the buffer zone.
- Marine Mammal Sightings forms were used to document observations (**Appendix C**).

During Construction Monitoring. The shutdown and buffer zones were monitored throughout the time required to install or remove a pile and during other in-water construction activities. The following monitoring methodology was implemented during pile operations:

- If a marine mammal was observed entering the buffer zone, an "exposure" was recorded and behaviors documented. However, that pile segment would be completed without cessation unless the animal entered or approached the shutdown (injury) zone, at which point all pile installation/removal activities associated with that rig were halted. The observers immediately radioed to alert the MC, who alerted the pile driving foreman. This action required an immediate "all-stop" to pile operations. Shutdown at one pile driving location did not necessarily trigger shutdowns at other locations where pile driving was occurring simultaneously.

- Under certain construction circumstances where initiating the shutdown and clearance procedures would result in an imminent concern for human safety, the Monitoring Plan provided that the shutdown provision would be waived. The shutdown provision was not waived during the Year 2 EHW-2 CMP.

- Pile installation/removal activities were delayed until the animal voluntarily left the shutdown zone and had been visually confirmed beyond the shutdown zone, or 15 minutes had passed without re-detection of the animal.

- During the pile driving delay, monitoring continued to be conducted and pile driving did not resume until the shutdown zone had been deemed clear of all marine mammals.

- Once marine mammals were no longer detected within the shutdown zone, or 15 minutes had elapsed without the resighting of the animal in the shutdown zone, the observers radioed the MC that activities could re-commence.

- If marine mammals were detected outside the shutdown zone, the observers continued to monitor these individuals and recorded their behavior, but pile driving proceeded. Any marine mammals detected outside the shutdown zone after pile driving was initiated continued to be monitored and their behaviors recorded.

- Marine Mammal Sighting forms were used to document observations (**Appendix C**).
- Any monitoring boats engaged in marine mammal monitoring maintained speeds equal to or less than 10 knots.
- Experienced marine mammal observers were trained to accurately verify species sighted.
- Observers used binoculars and the naked eye to search continuously for marine mammals.
- In case of fog or reduced visibility, the observers had to be able to see the shutdown and buffer zones; otherwise, pile driving was halted or not initiated until visibility in these zones improved to acceptable levels.
- During impact pile driving, marbled murrelet monitoring protocols were run concurrently with the above described monitoring efforts.
- When approved by the Navy, observers would conduct surveys of Delta and Marginal piers and along the WRA fence floats during extended periods of no pile driving activity within the construction day. These sightings were recorded and analyzed separately.

Post-Construction Monitoring. Monitoring of the shutdown and buffer zones continued for 30 minutes following completion of pile installation and removal activities. The post-monitoring period was not required for other in-water construction. These monitoring efforts focused on observing and reporting unusual or abnormal behavior of marine mammals. During these efforts, if any injured, sick, or dead marine mammals were observed, the U.S. Navy was to notify NMFS immediately. Monitoring results were noted on the Marine Mammal Sighting form (**Appendix C**).

Piles and Pile Driving Equipment

Pile Descriptions. During the EHW-2 CMP, 411 production steel piles (piles that will remain as part of the EHW-2 structure) were driven by vibratory and impact hammers. All 411 piles were driven by a vibratory hammer, and 383 of those piles were subsequently driven by an impact

hammer. Piles impacted consisted of 299 plumb piles and 84 batter piles. Production piles ranged in diameter from 36 to 48 inches (0.92 to 1.22 m) (**Figure 6; Appendix D**).

Due to inconsistent substrate conditions encountered, a significantly greater portion of piles required proofing than was originally indicated would likely be necessary. Initial proof testing of every 4th or 5th pile showed the piles were coming up short of required bearing capacity. After being allowed to rest for a set time period after vibratory driving, the piles were proofed with an impact hammer to derive the bearing capacity. The piles were then either accepted, allowed to rest again and proofed, or had an additional splice welded on and driven again then proofed. Due to the substantial inconsistencies encountered the Navy could not guarantee adequate bearing capacity without the additional proofing. The permit does make allowance for encountering unanticipated conditions. Pile installation did make use of vibratory hammers to the greatest extent possible.

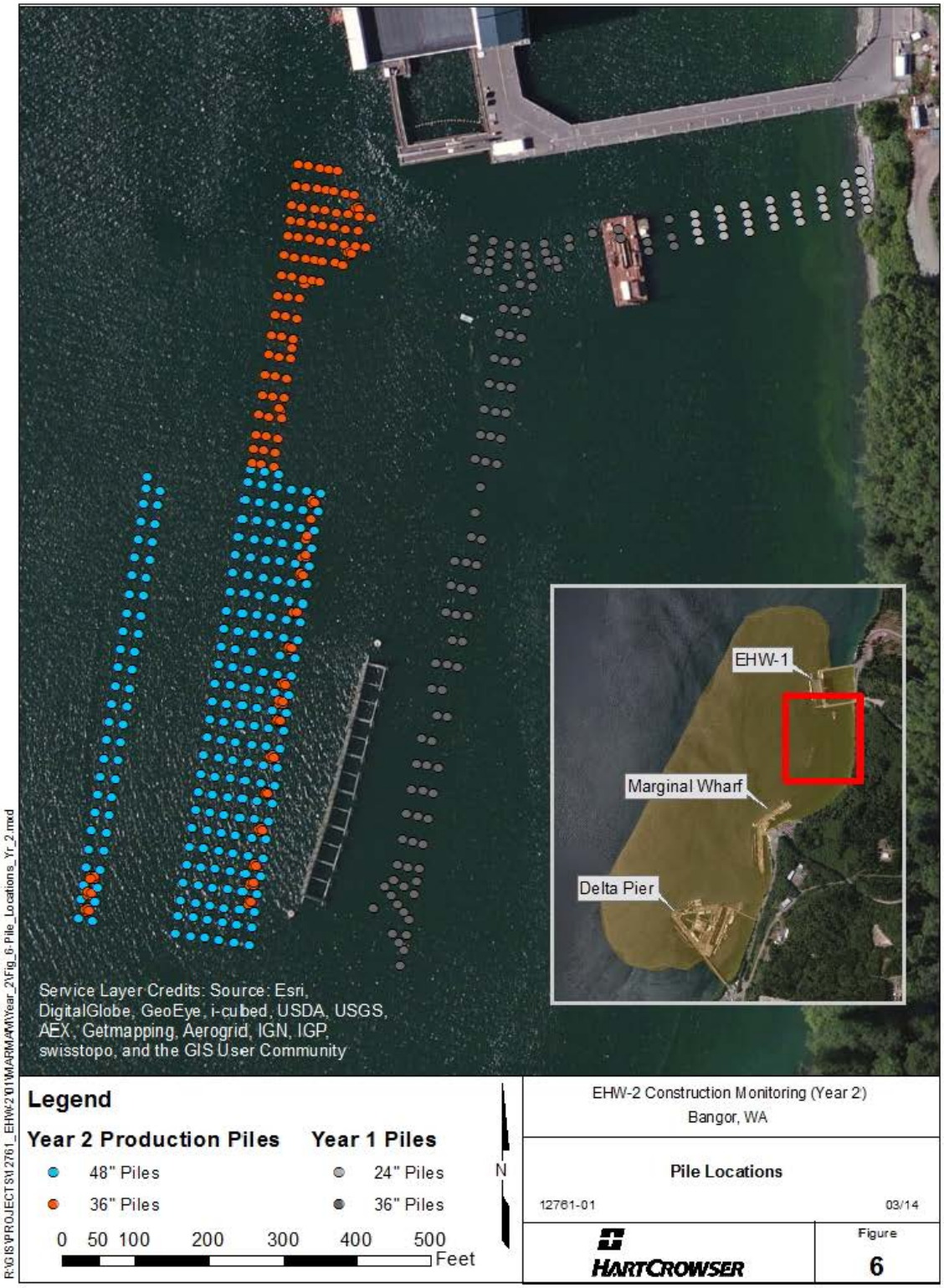

Figure 6. Year 2 Production Pile Locations

During Year 2 of the EHW-2 CMP, template pin piles and falsework (referred to as "temp" piles in **Appendix D**) were also installed and removed with vibratory hammers. These temporary piles ranged in size from 24 to 48 inches (0.61 to 1.22 m) in diameter (**Figure 6**; **Appendix D**).

Pile Driving Equipment. Pile driving equipment was provided and operated by EHW Constructors' pile driving crews. Vibratory (American Piledriving Equipment [APE] 400 and APE 600) and impact hammers (APE D100) were used during the project, though only one impact hammer was in operation at any time.

The APE 400 and APE 600 have drive forces of 361 tons and 556 tons, respectively. The APE 400 was used on 24- and 36-inch piles, while APE 600 was used for 36- and 48-inch piles, as well as a few 24-inch piles. The impact hammer APE D100 was rated for 248,063 foot-pounds (ft-lbs). The APE D100 was used to impact 36- and 48-inch piles (**Appendix D**). In total, there were 503 instances where piles were driven with an impact hammer (some of the 383 piles subject to impact driving were driven on more than 1 occasion), and therefore required formal monitoring for marbled murrelets. Marbled murrelet monitoring methods and findings are presented in a separate report (DON 2014).

A sound attenuation bubble curtain or bubble pile was utilized during all impact driving events except during the final three days of the Year 2 EHW-2 CMP (discussed further below; see **Appendix E** for design specifications of the air bubble curtain and air bubble pile sound attenuation systems). The bubble curtain was used for sound attenuation during impact pile driving of all plumb piles. The curtain was designed with an adjustable number of rings spaced no further than 15 feet (4.6 m) apart vertically, and were constructed of 3-inch (7.6 centimeter [cm])-diameter pipe rolled into a circle 4 feet, 10 inches (1.5 m) in diameter. Vent holes were 1/16 inches (0.16 cm) in diameter in three sets with a set of center top holes and two additional sets of holes at 45-degree angles to the inside and outside of the ring. The top sets of holes were spaced 1 inch apart (2.5 cm) and the inside/outside sets were spaced 3 inches (7.6 cm) apart around the ring. Each ring was required to pass approximately 501 cubic feet per minute (cfm; 14.2 cubic meters per minute) of oil-free air to meet design requirements.

Batter piles are driven into the substrate at an angle. The bubble curtain was difficult to place on the batter piles due to the presence of the template used to maintain the required angle during

pile driving. In addition, given their angle through the water column, batter piles were not as effectively covered with bubbles using the bubble curtain as for vertical or plumb piles. To reduce the inefficiencies and ineffectiveness of the bubble curtain for use during impact pile driving of batter piles, EHW Constructors designed an air bubble pile. The bubble pile was used during impact pile driving of batter piles during the Year 2 EHW-2 CMP. The bubble pile was designed with ten 3-inch (7.6 cm) by 9.5-foot (2.90 m) pipes installed vertically around a 110-foot (33.5 m), 24-inch (61 cm)-diameter pile. The 3-inch pipes were installed end-to-end along the length of the pile and were connected to hoses to supply air to the system. Vent holes were 1/16 inches (0.16 cm) in diameter in three sets with a set of center holes spaced 1 inch (2.5 cm) apart and two additional sets of holes offset at 45 degree angles spaced 3 inches (7.6 cm) apart. The bubble pile was placed within 10 feet (3 m) of the pile during impact pile driving.

At the end of the Year 2 EHW-2 CMP, sound attenuation was suspended for a period of 3 days in order to prevent possible volatilization of toxic chemical compounds after an accidental spill in the WRA on 10 February 2014 unrelated to EHW construction. At the time of the spill, which covered most of the construction area, staff reported strong hydrocarbon smells, and some respiratory distress (sore throats, coughing) was reported. Construction was halted on the afternoon of 10 February 2014 and did not resume until 12 February 2014. Before evacuation for safety concerns, observers recorded all bird and mammal species present, behaviors, and any noticeable changes in the consistency of the spill during and between construction activities. Environmental chemists at Hart Crowser concluded that the bubble curtain could result in additional volatilization of organic compounds and/or generation of airborne particulates containing chemicals from the remaining spill material, thereby potentially resulting in staff exposure. On being so advised, Hart Crowser's Principal in Charge for the Monitoring Program (Jeff Barrett) provided EHW Constructors and the Navy, on 11 February 2014, with notification that bubble curtain use was being suspended to protect the health and safety of observers and construction crews while pile driving continued, and that the suspension would last until all remaining traces of the spill were gone from the construction area. The seasonal cutoff for pile driving (February 15) occurred before the spill completely disappeared.

Environmental Data

Environmental parameters were initially measured at intervals inside the WRA from Marginal Wharf. A Kestrel 4000 anemometer was used to determine wind speed and air temperature. A HOBO Water Temperature Pro Data Logger was deployed to collect water temperatures. The weather meter malfunctioned on several occasions, and at other times was rendered inoperable (i.e., knocked over) by high winds. In addition, for wind data, there was some concern that a ground-based sensor might be subject to variations in wind speed based on the location of nearby buildings or vessels, thereby yielding results that were not fully representative of those on the waters surrounding the EHW construction activities. Based on these concerns, a decision was made to collect environmental data from permanent weather stations. Environmental parameters were obtained from a coastal weather station in Lofall, WA, 5.25 miles to the northeast of the work site. Water temperature data were obtained from the New Dungeness Buoy, 45 miles to the northwest. Water temperature data from New Dungeness Buoy were compared to a limited number of temperature readings taken at Marginal Wharf. Readings at were the buoy were zero to four degrees Fahrenheit lower than temperatures recorded at Marginal Wharf, with the maximum difference occurring during summer months. Visual observations of wave height, wind direction, and weather conditions continued to be based on observations within the WRA, and were included in the sightings data.

Section 3 Results

The MC logged pile driving times and related construction activities for each pile, which served as the basis for marine mammal sightings data quality control (**Appendix B**).

Marine Mammal Sightings

Three marine mammal species were observed during the Year 2 EHW-2 CMP: harbor seal (*Phoca vitulina*), California sea lion (*Zalophus californianus*), and Steller sea lion (*Eumetopias jubatus*). The Steller sea lion was the only ESA-listed marine mammal observed during the Year 2 EHW-2 CMP. Stellar sea lions were removed from ESA-listing at the end of October 2013 (NOAA 2013). All marine mammals sighted in Hood Canal are regulated by NMFS.

Analyses of marine mammal sightings are presented in two groups: the marine mammal sightings made during construction monitoring of the buffer and shutdown zones (Primary) and sightings of marine mammals hauled out on submarines, barrier fence floats, and pier-structures at Delta and Marginal Pier, which are outside of the buffer zone (Non-Primary). These non-primary sightings of marine mammal haul outs, collected by Hart Crowser, are presented separately as protocols do not include monitoring of these areas and observations were irregular, typically occurring during large breaks of pile driving activity or at the end of day.

All Marine Mammal Sightings. All marine mammal sightings include those (both primary and non-primary) made during pile driving activities and those made during down time (non-construction periods). Observers typically surveyed for marine mammals during the entire construction day (8–10 hours). Results from all marine mammal sightings are presented in **Figures 7** and **8**.

Primary Surveys. A total of 3,123 sightings of 3,312 individual animals were observed during primary marine mammal surveys of the Year 2 EHW-2 CMP (**Table 3, Appendix F**). A sighting could include more than one animal, which is why the total number of sightings is less than the total number of animals. Of the two marine mammal species identified (harbor seal and California sea lion), harbor seals were the most abundant. Harbor seals and California sea lions were usually observed singularly, with mean group sizes of one for both species. Two observations during primary surveys were recorded as unidentified pinnipeds. These two observations are not included in the following analyses but are included in **Appendix F**.

Table 3. Total Number of Unique Animals and Sightings by Species (Primary Surveys)

Species	Total # of Animals	Total # of Sightings	Mean Group Size	Min Group Size	Max Group Size
California Sea Lion	83	77	1	1	3
Harbor Seal	3,229	3,046	1	1	5
Total	**3,312**	**3,123**	--	--	--

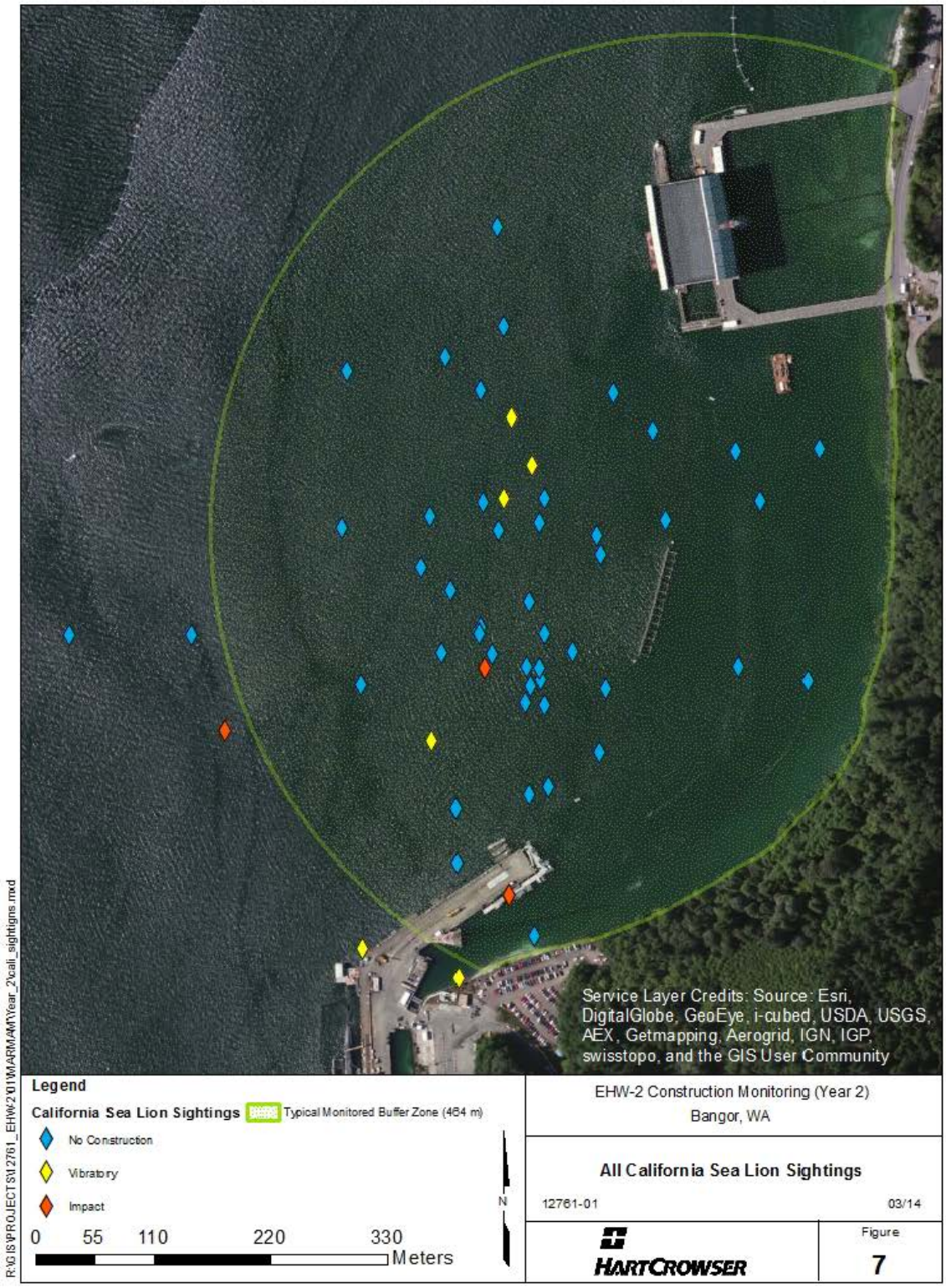

Figure 7. All California Sea Lion Sightings

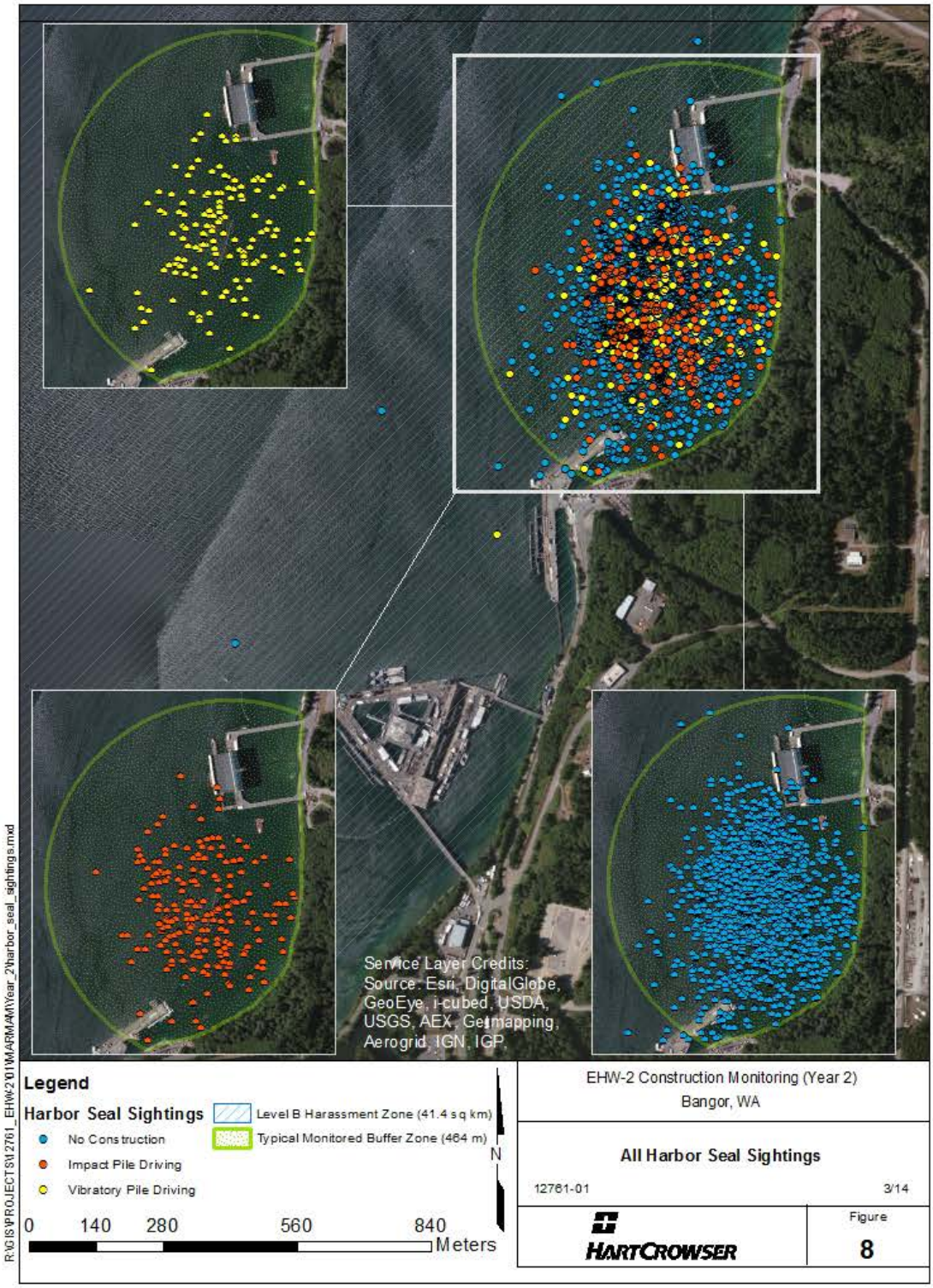

Figure 8. All Harbor Seal Sightings

Non-Primary Surveys. A total of 43 sightings of 962 individual marine mammals were observed during surveys of Delta and Marginal Pier and along the WRA fence floats (**Table 4, Appendix F**). Of the three species identified (harbor seal, California sea lion and Steller sea lion), California sea lions were the most abundant. California sea lions were observed hauled out in large groups, with a mean survey size of 29 animals. The maximum survey count of 96 California sea lions included those hauled out on two submarines at Delta Pier and additional individuals observed on floats of the port security barrier. Harbor seals were seen hauled out on two occasions, in one instance eight individuals were observed hauled out on overwater structures under Marginal Pier and a single individual was seen hauled out on a WRA fence float. Steller sea lions were observed singularly or in larger groups of up to 11 individuals and only observed on or adjacent submarines at Delta Pier.

Table 4. Total Number of Unique Animals and Sightings by Species (Non-Primary Surveys)

Species	Total # of Animals	Total # of Sightings	Mean Survey Count	Min Survey Count	Max Survey Count
California Sea Lion	917	32	29	1	96
Harbor Seal	9	2	5	1	8
Stellar Sea Lion	36	9	4	1	11
Total	**962**	**43**	--	--	--

Marine Mammal Sightings during Pile Installation and Removal Activities. Pile installation and removal activities included installation and removal by vibratory and impact hammers including soft start (soft start was only required for impact pile driving during the Year 2 EHW-2 CMP). Therefore, there were three types of construction: vibratory pile driving (V), impact pile driving (I), and soft start impact (SSI) pile driving. Soft starts were intended to provide an opportunity for nearby marine animals to voluntarily leave the area, and thus avoid potential harassment or injury. Vibratory pile driving typically required more time per pile, and all piles were subject to pile driving. Vibratory driving times ranged from 1 second to 1 hour and 34 minutes, with a total time for all piles combined of 101 hours, 37 minutes, and 45 seconds. Impact pile driving was of shorter duration, on average, and only a subset of piles were subject to impact driving. Impact drives lasted between 1 second and 32 minutes, with a total time for all piles of 14 hours, 46 minutes, and 24 seconds. The total concurrent drive time when both impact

and vibratory pile driving were occurring simultaneously is 2 hours, 34 minutes, and 43 seconds. The total concurrent drive time when two vibratory pile driving rigs were driving simultaneously is 1 hour, 46 minutes, and 26 seconds.

Two marine mammal species were observed during pile driving, harbor seals and California sea lions. Although Steller sea lions were observed during the Year 2 EHW-2 CMP Non-Primary Surveys, none were observed during pile driving or removal events.

No fish kills were observed or reported during the Year 2 EHW-2 CMP.

Primary Surveys. A total of 697 sightings of 723 marine mammals were observed during primary marine mammal surveys of pile installation and removal activities (impact and vibratory pile driving; **Table 5**; **Figures 7** and **8**). There were 10 California sea lion sightings, all of which were of individual animals. Harbor seals were by far the most frequently sighted species during impact and vibratory pile driving, accounting for 98% of all sightings. Although harbor seals were observed in pairs, most often they were seen individually (98% of sightings).

Table 5. Summary of Unique Marine Mammal Sightings during Pile Installation and Removal Activities (Primary Surveys)

Species	Total # of Animals	Total # of Sightings	Mean Group Size	Min Group Size	Max Group Size	Construction Type*		
						V	SSI	I
California Sea Lion	10	10	1.00	1	1	8	--	2
Harbor Seal	713	687	1.05	1	2	304	30	379
TOTAL	**723**	**697**	**1.02**	--	--	**312**	**30**	**381**
*V= Vibratory Driving, SSI= Impact Hammer Soft Start, I= Impact Hammer								

Despite the much greater total time of vibratory driving (101:37:45 versus 14:46:32 [includes time of concurrent vibratory and impact driving]), more animals were observed during impact pile driving than during vibratory driving (**Table 5**).

Non-Primary Surveys. Non-primary surveys outside of the buffer zone took place during long breaks of no construction, and there were no observations during these surveys while pile installation or removal activities occurred.

Observed Exposures (Takes)

Injury and behavioral harassment takes were calculated based on marine mammals sighted during impact and vibratory pile driving for the Year 2 EHW-2 CMP. Takes were calculated by: (1) measuring sighting distance to the pile for all animals observed during construction activities, and (2) comparing this distance to underwater and airborne injury and behavioral harassment thresholds (based on EHW-2 acoustic data) on a per-species and per-pile basis (**Appendix F**). Distance to pile was estimated (typically verified using laser rangefinders) and recorded by observers on field data sheets. Whenever possible, observers noted if an animal was likely a resighting (**Appendix F**) and communicated with nearby observers in the field to "hand off" sightings of the same animal(s). This information was taken into account when calculating takes to avoid double-counting exposed animals. Takes are reported as the number of individuals observed and as the number of sightings within a given zone.

There were 14 sightings within the Level A Injury zone during the Year 2 EHW-2 CMP which resulted in Level A Takes, 12 during impact pile driving, and two during vibratory pile driving. These sightings are discussed in the Marine Mammal Mitigation Procedures section below.

The total number of Level B Harassment takes for marine mammal during the Year 2 EHW CMP are summarized in **Table 6**. All animal sightings, including resightings of previously identified animals, are included here (i.e., "All Sightings") to provide the most conservative estimate of takes. No Dall's porpoise, harbor porpoise, or killer whales were observed during construction monitoring or at any other time during the Year 2 EHW-2 CMP; however, these species frequent deeper water outside the WRA and would have been challenging to see from inside the WRA. Consequently, no observed takes were recorded for any of these species. No exceedances of any of the IHA-authorized Level B harassment take numbers occurred during the Year 2 EHW-2 CMP (NMFS 2013).

Table 6. Summary of Observed Level B Harassment Takes (includes resightings)

Species	Takes During Vibratory Driving	Takes During Impact Driving	Total Takes	Takes Per Day	Allowed Takes	Takes Allowed Per Day
California Sea Lion	8	2	10	0.06	6,045	36
Harbor Seal	365	505	870	5.21	10,530	63

Takes were also calculated on a per-pile basis (all Level B Harassment takes per number of production piles driven) and summarized in **Table 7**. Per-pile takes are more than 100 times higher for harbor seals than for California sea lions, in keeping with the higher observed abundance of seals in the construction area.

Table 7. Summary of Observed Level B Harassment Takes Per Production Pile

Species	Takes Per Pile
California Sea Lion	0.02
Harbor Seal	2.12

Extrapolated Exposures (Takes)

The calculated behavioral harassment zone during vibratory pile driving was defined as the marine area within the average distance to the 120 dB isopleth during the Year 2 EHW-2 CMP. This is a large area, with a total covered area of 41.4 km^2. Only a subset of this area was consistently monitored (464-m radius from the pile, or 0.68 km^2 as outlined in the monitoring plan). It is therefore appropriate to estimate the number of potential Level B marine mammal takes that may have occurred in the ensonified, but unmonitored, zone.

Marine mammal density numbers taken from the IHA Application were used to develop this extrapolation. Specifically, extrapolated takes were calculated by multiplying the density of marine mammals in Hood Canal near the WRA (i.e., total animal sightings per km^2 per day) by the total unmonitored area inside the 120 dB isopleth (40.72 km^2). This product was then multiplied by the total days of vibratory pile driving during the Year 2 EHW-2 CMP to arrive at the extrapolated number of takes in the unmonitored zone (**Table 8**).

Extrapolated take levels, were summed with observed takes to derive an estimate of the total number of behavioral harassments takes during the Year 2 EHW-2 CMP (**Table 9**). The total takes ranged from an estimate of 54 for Dall's porpoise to 7,910 for harbor seal (**Table 9**). For all species, the estimate of total takes was less than the IHA-authorized take levels for the Year 2 EHW-2 CMP.

Table 8. Extrapolated Level B Harassment Takes in the Unmonitored Area of the Behavioral Harassment Zone

Species	Density Estimate* (IHA)	Unmonitored Level B Harassment Zone (Area, km^2)	Estimated Abundance In the Unmonitored Area	EHW-2 CMP Total Vibratory Pile Driving Days	Extrapolated Takes
California Sea Lion	0.63	40.72	25.7	133	3,412
Dall's Porpoise	0.01		0.4		54
Harbor Porpoise	0.25		10.2		1,354
Harbor Seal	1.3		52.9		7,040
Steller Sea Lion	0.028		1.14		152
Killer Whale[1]	0.04		1.6	45	74

*Density=observed animals/km^2/day

[1] The number of exposures for transient killer whales due to behavioral harassment was calculated based on 45 days of exposure during the in-water construction period per the IHA.

Table 9. Summary of Observed and Extrapolated Level B Harassment Takes

Species	Observed Takes - Vibratory Driving	Extrapolated Takes – Vibratory Driving	Observed Takes - Impact Driving	Total Takes	Allowed Takes
California Sea Lion	8	3,412	2	3,422	6,045
Dall's Porpoise*	-	54	-	54	195
Harbor Porpoise	-	1,354	-	1,354	1,950
Harbor Seal	365	7,040	505	7,910	10,530
Steller Sea Lion	-	152	-	152	390
Killer Whale*	-	74	-	74	180

*These extrapolated take numbers are provided for reference. The Navy believes that these species were not likely present because (1) presence of killer whales in the Hood Canal would likely be know via public fora (e.g., Orca Network) and (2) Dall's Porpoise is not likely present as indicated by the lack of take request in the year 3 IHA.

Marine Mammal Mitigation Procedures: Construction Delays and Shutdowns

If a marine mammal was observed in or approaching the shutdown zone, ongoing construction was to be stopped, and imminent construction was to be delayed. During the Year 2 EHW-2 CMP there were four construction delays due to a harbor seal observed within or near the

shutdown zone just prior to planned pile driving, and 17 construction shutdowns due to harbor seals surfacing within or near the shutdown zone during vibratory or impact pile driving. Of the 17 construction shutdowns, 14 were because of animals close enough to the pile to result in a Level A take. All Level A takes were a result of animals surfacing within the shutdown zone (i.e., they were not observed approaching the zone prior to their emergence within the zone) and resulted in immediate suspension of pile driving. All of these animals were subsequently observed outside of the shutdown zone and did not exhibit behaviors consistent with injury or distress. The one exception was a harbor seal which was not resighted after a 15-minute delay in pile driving. These construction delays and shutdowns with associated sightings are summarized in Table 10. The majority of the construction shutdowns were during impact pile driving (n=14, 82%). These 17 shutdowns occurred over a total of 14 days. In most cases, only a single delay/ shutdown occurred on any individual day; but on 21 November 2013, three delay/shutdown events occurred. Impact pile shutdowns resulted from animals located from 15 to 22 meters from the impacted pile. The closest marine mammal sighted during vibratory pile driving was 8 m from the pile. No adverse behaviors were noted for any of the sightings within the Level A zone.

Table 10. Marine Mammal Mitigation Delays and Shutdowns

Date	Event code	Take	Event		Const. Type	Species	Sighting		Dist. To pile	# of Animals	Relative Motion	Behav. Code[a]	Behav 2[a]	Behav 3[a]	Comments
			Start Time	End Time			Start Time	End Time							
7/25/2013	MD	No	10:25:08	10:25:14	NONE	HSEA	10:25:08	10:25:14	25	1	Away	SW-SW	DI	--	Delayed the start of vibe for TT-3. Started after HSEA clear. Observed HSEA swim out of the SD zone.
7/31/2013	MD	No	14:11:27	14:14:37	NONE	HSEA	14:12:26	14:12:33	9	1	None	LO	RE	SI	Delay of onset of vibe driving when animal surfaced in to zone between drives.
						HSEA	14:13:38	14:13:50	18	1	None	LO	DI	--	Seal observed outside SD zone, resumed pile driving
8/2/2013	MS	Yes	14:00:56	14:01:59	V	HSEA	14:00:56	14:01:59	8	1	None	FL	LO	DI	Shutdown when animal surfaced in to zone. Resumed work after sighting animal outside zone.
8/5/2013	MD	No	15:23:55	16:00:00	NONE	--	--	--	--	--	--	--	--	--	MD due to Beaufort 3. Crew called it a day at 16:00 after freeing stuck hammer from pile, as wind was not laying down.
10/21/2013	MS	Yes	16:51:48	16:55:10	I	HSEA	16:58:26	16:59:20	20	1	None	MI	SI	--	SD due to seal 20 m N of pile. Construction did not resume since it was too close to sunset. Seal not resighted.
11/12/2013	MS	No	14:13:53	14:17:28	I	HSEA	14:13:59	14:13:49	25	1	Away	SW-W	DI	--	Shutdown to confirm distance of animal to pile.
						HSEA	14:17:35	14:17:27	25	1	Away	SW-N	DI	--	Confirmed seal observed outside SD zone, resumed pile driving
11/13/2013	MS	Yes	15:09:48	15:12:47	V	HSEA	15:10:40	15:11:56	8	1	Toward	SW-NE		--	Shutdown when animal surfaced in to zone. Resumed work after sighting animal outside zone.
11/14/2013	MS	Yes	14:57:14	15:02:30	I	HSEA	15:00:23	15:00:30	20	1	Away	SW-N	DI	--	Seal within shutdown zone
						HSEA	15:01:52	15:02:53	55	1	Toward	SW-NW		--	Seal observed outside SD zone, resumed pile driving
	MS	Yes	15:04:17	15:17:02	I	HSEA	15:04:10	15:04:12	15	1	None	LO	DI	--	Shutdown work when animal surfaced within shutdown zone, resumed work when we saw animal swim out of zone
11/16/2013	MS	Yes	15:40:00	15:45:52	I	HSEA	15:39:00	15:41:41	18	1	Away	SW-E	SI	--	Shutdown when animal surfaced in to zone. Resumed work after sighting animal outside zone.
11/21/2013	MS	Yes	9:31:05	9:38:15	I	HSEA	9:31:05	9:36:15	15	1	Away	SW-W	SW-NE	--	Shutdown work when animal surfaced within shutdown zone, resumed work when we saw animal swim out of zone
	MS	Yes	9:42:05	9:46:44	I	HSEA	9:42:05	9:42:48	22	1	Away	PO	CD	MI	Animal initially porpoising rapidly then changed direction, surfaced looking then appeared to be foraging near surface.
						HSEA	9:43:52	9:43:57	15	1	Toward	SW-E			Shutdown when animal surfaced in zone. Resumed work after sighting animal outside zone.
	MS	No	10:08:10	10:13:12	I	HSEA	10:08:40	10:11:00	35	1	Toward	SW-NE	LO		Shutdown when animal surfaced near zone. Resumed work after sighting animal outside zone.
11/23/2013	MS	Yes	14:16:46	14:18:18	I	HSEA	14:17:15	14:17:41	15	1	Away	LO	SI	SW-N	Shutdown work when animal surfaced within shutdown zone, resumed work when we saw animal swim out of zone
12/4/2013	MS	Yes	11:26:49	11:30:46	I	HSEA	11:26:00	11:26:19	15	1	None	LO			Shutdown work when animal surfaced within shutdown zone, resumed work when we saw animal swim out of zone
12/5/2013	MS	Yes	11:26:49	11:28:47	I	HSEA	11:25:51	11:26:10	9	1	Parallel	RE	DI		Shutdown work when animal surfaced within shutdown zone, resumed work when we saw animal swim out of zone
12/14/2013	MS	No	10:12:19	10:18:20	V	HSEA	10:12:22	10:12:40	13	1	Parallel	SW-N	FL	DI	Shutdown vibratory pile driving to confirmed distance of seal to pile. Once confirmed, resumed vibe.

Date	Event code	Take	Event		Const. Type	Species	Sighting		Dist. To pile	# of Animals	Relative Motion	Behav. Code[a]	Behav 2[a]	Behav 3[a]	Comments
			Start Time	End Time			Start Time	End Time							
1/15/2014	MS	Yes	13:09:24	13:10:08	I	HSEA	13:09:24	13:09:34	17	1	Away	SW-N			Shutdown when animal surfaced in to zone. Resumed work after sighting animal outside zone.
1/17/2014	MD	No	15:42:15	15:58:03	NONE	HSEA	15:42:32	15:43:08	12	1	Toward	LO	--	--	Delay of onset of impact driving when animal surfaced in to zone between drives. Reinitiated work after waiting 15 minutes to resight seal.
1/22/2014	MS	Yes	13:38:22	13:53:22	I	HSEA	13:38:12	13:38:14	14	1	Parallel	RE	DI		Shutdown impact driving when animal surfaced in to zone. Reinitiated work after waiting 15 minutes to resight seal.
1/23/2014	MS	Yes	11:57:21	12:08:48	I	HSEA	12:00:00	12:00:05	16	1	Toward	SW-SW			Shutdown when animal surfaced in to zone. Resumed work after sighting animal outside zone.

[a)] Definitions for Behavior Codes can be found in Appendix C

MS = Mitigation Shutdown

MD = Mitigation Delay

Marine Mammal Sightings and Environmental Conditions

Most marine mammal sightings were made in calm conditions with low wave height (**Figures 9a** and **9b)**. All marine mammal sightings (including resightings) were made during Beaufort sea state (BSS) conditions of 0–3 (winds at or below 16 knots; see **Appendix C** for the Beaufort scale). Sightings declined significantly at BSS 2 and above. This appeared to be due, at least in part, to reduced activity and movement by marine mammals, as the MMOs often reported good monitoring visibility at a BSS of 3. Favorable weather persisted throughout construction and shutdowns due to reduced visibility were not required at any time. All construction and marine mammal surveys occurred during sea states of BSS 3 or below.

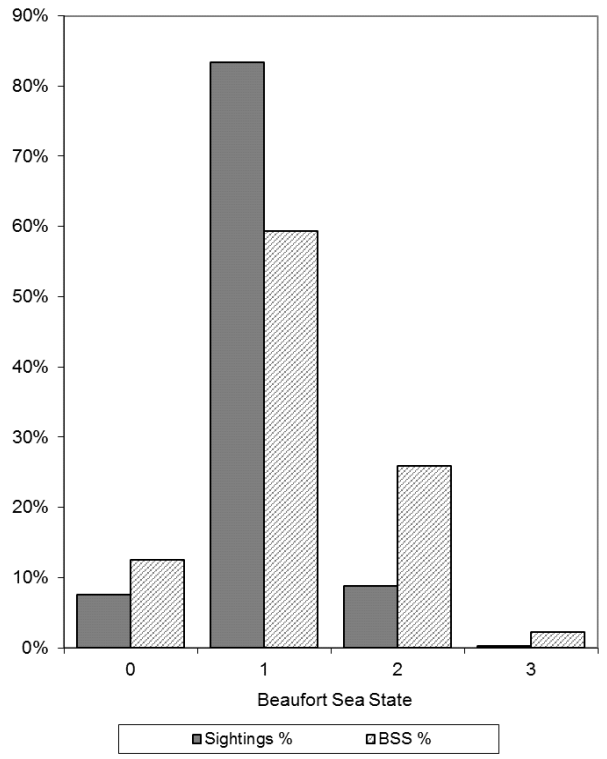

Figure 9a. Sightings by Sea State

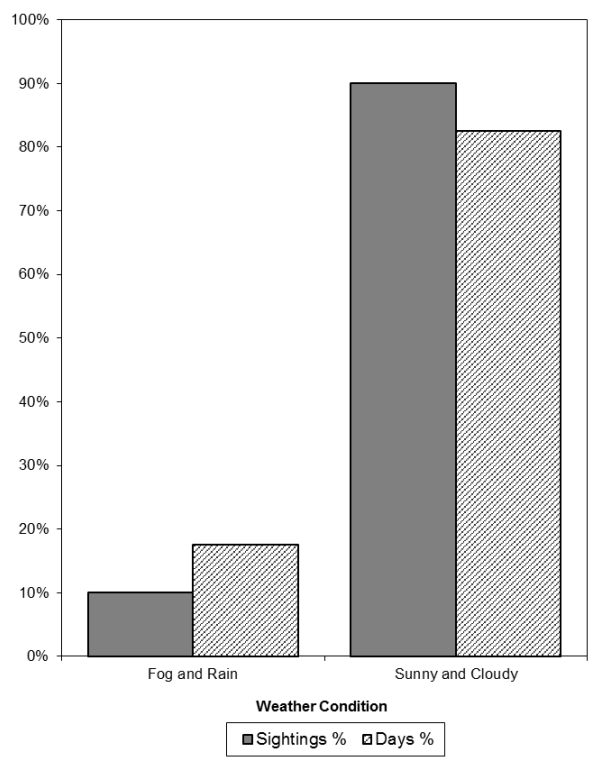

Figure 9b. Sightings by Weather Condition

Favorable weather conditions (cloudy and sunny) occurred on 82% of construction days; 90% of all sightings occurred under those conditions. Weather that produced reduced visibility (fog and rain) occurred on 18% of construction days; 10% of all sightings occurred under those conditions.

Marine Mammal Behavior

Quantitative Analysis. Observers typically searched for marine mammals continuously. When animals were observed, data were recorded continuously) from the beginning of pre-watch until the end of the monitoring effort for the day (see **Table 2** for a summary of the monitoring effort). Behavior was recorded during both construction and non-construction periods (**Appendix F**). Behavioral analyses are reported separately by Primary and Non-Primary surveys and are presented by species where applicable. Behavior codes are found in **Appendix C**. The number of observed animals and the number of observed behaviors is not necessarily the same due to: (1) instances where multiple animals were observed exhibiting the same behavior, and (2) situations where individual animals performed multiple behaviors during a single observation.

Primary Surveys. Primary surveys of the buffer and shutdown zones occurred throughout the project, before, during and after all pile driving events. California sea lions and harbor seals were the only marine mammal species observed during Primary Surveys.

California Sea Lion. During pre-construction monitoring, California sea lions were observed "swimming" (56%, n=5), and "diving" and "looking" (each 22%, n=2) (**Figure 10a**). During construction, California sea lions were frequently observed "swimming" (27%, n=36), "diving" (26%, n=34), and "traveling" (24%, n=32). In addition to these dominant behaviors observed during construction, California sea lions also exhibited a range of other behaviors (e.g., porpoise, look, mill, and spyhop), but less frequently, with only 2 to 3 animals demonstrating. In the table, these behaviors were collectively grouped under "other" during construction. During post-construction monitoring, California sea lions were frequently observed "diving" (33%, n=1) and "traveling" (66%, n=2).

When analyzed by construction event type, California sea lions were frequently observed "traveling" (24%, n=27), "swimming" (29%, n=33), and "diving" (26%, n=30) during construction events other than pile driving (**Figure 10b**). The four California sea lions observed during impact driving were seen "traveling", "porpoising", "milling" and "change direction" (each 25%, n=1). During vibratory pile driving, California sea lions were most frequently observed "diving" and "traveling" (each 27%, n=4), in addition to "porpoising" and "swimming" (each 20%, n=3).

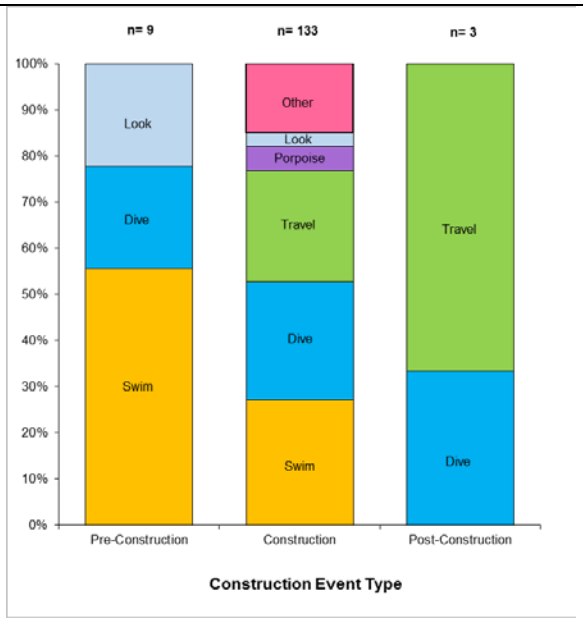

Figure 10a. California Sea Lion Behaviors Before, During and After Construction: Primary

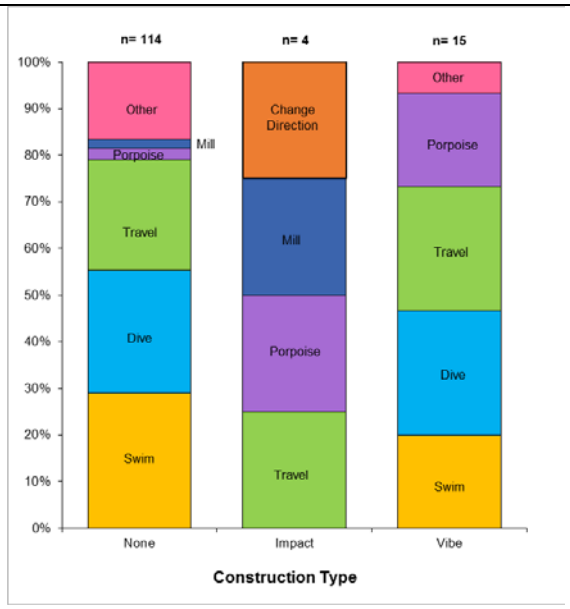

Figure 10b. California Sea Lion Behaviors By Construction Type: Primary

Harbor Seal. During pre-construction monitoring, harbor seals were most frequently observed "swimming" (22%, n=65), "diving" (20%, n=58), "sinking" (17%, n=51), and "looking" (20%, n=59) (**Figure 11a**). During construction, harbor seals were frequently observed "swimming" (29%, n=1766), "diving" (22%, n= 1311), "sinking" (15%, n=884), "looking" (14%, n=858), and "resting" (11%, n=684). During post-construction monitoring, harbor seals exhibited similar behaviors as observed during construction. Of these behaviors "swimming" (25%, n=72), "diving" (23%, n=66), and "looking" (17%, n=50) were most common.

When analyzed by construction event type, harbor seals were frequently observed "swimming" (28%, n=1265), "diving" (22%, n=981), and "sinking" (15%, n=686) during construction other than pile driving (**Figure 11b**). During impact pile driving, harbor seals were most frequently observed "swimming" (32%, n=281), "diving" (23%, n=197), and "looking" (15%, n=131). During vibratory pile driving, harbor seals were most frequently observed "swimming" (33%, n=220), "diving" (21%, n=140), and "sinking" (16%, n=104).

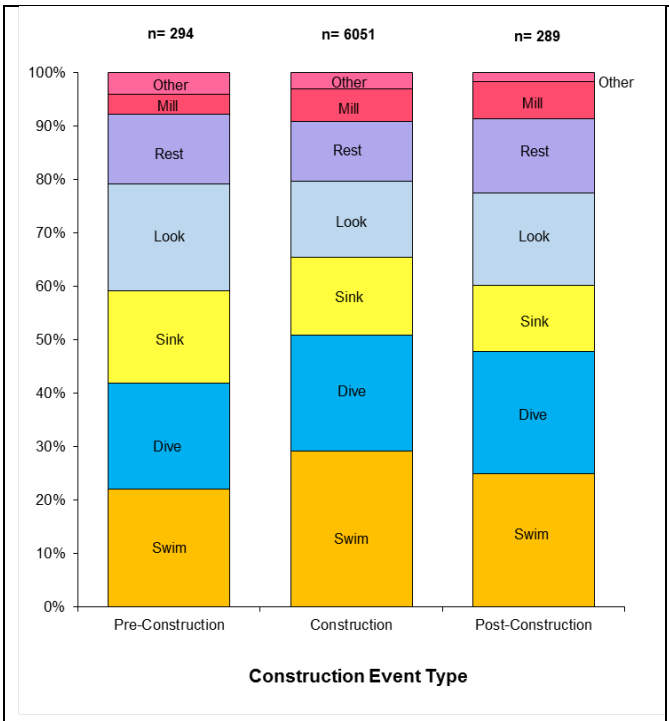

Figure 11a. Harbor Seal Behaviors Before, During and After Construction: Primary

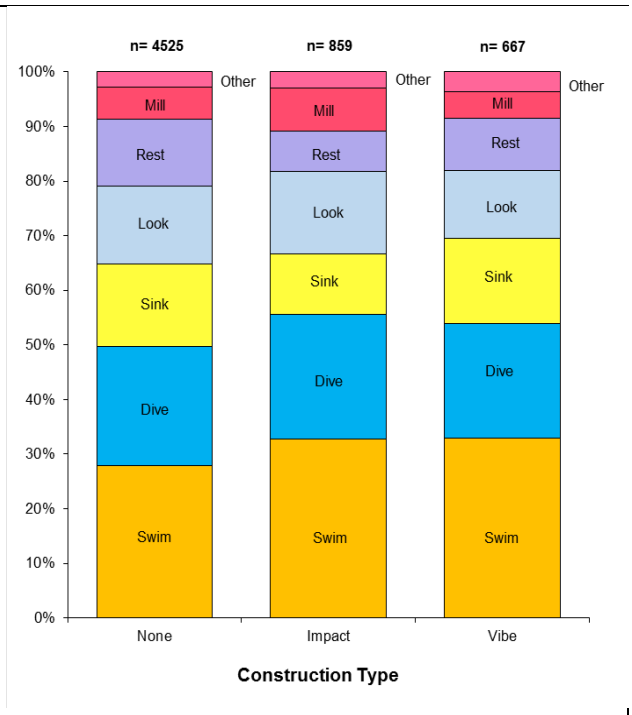

Figure 11b. Harbor Seal Behaviors By Construction Type: Primary

Harbor Porpoise and Steller Sea Lion. No harbor porpoise or Steller sea lions were observed during Primary Surveys.

Non-Primary Based Surveys. All non-primary surveys were conducted during large breaks in construction activities, and all sightings were of animals on or near Navy submarines, pier structures, or WRA fence floats. California sea lions, harbor seals, and Steller sea lions were observed during these surveys.

California sea lions were most often seen "resting" (41%, n=516), "hauled out" (32%, n=396), and "playing" (21%, n=260; **Figure 12**). Harbor seals were only observed "hauled out" (100%, n=9). Steller sea lions were seen "resting" (62%, n=26) and "fighting" (26%, n=11) while hauled out on the submarines (**Figure 12**).

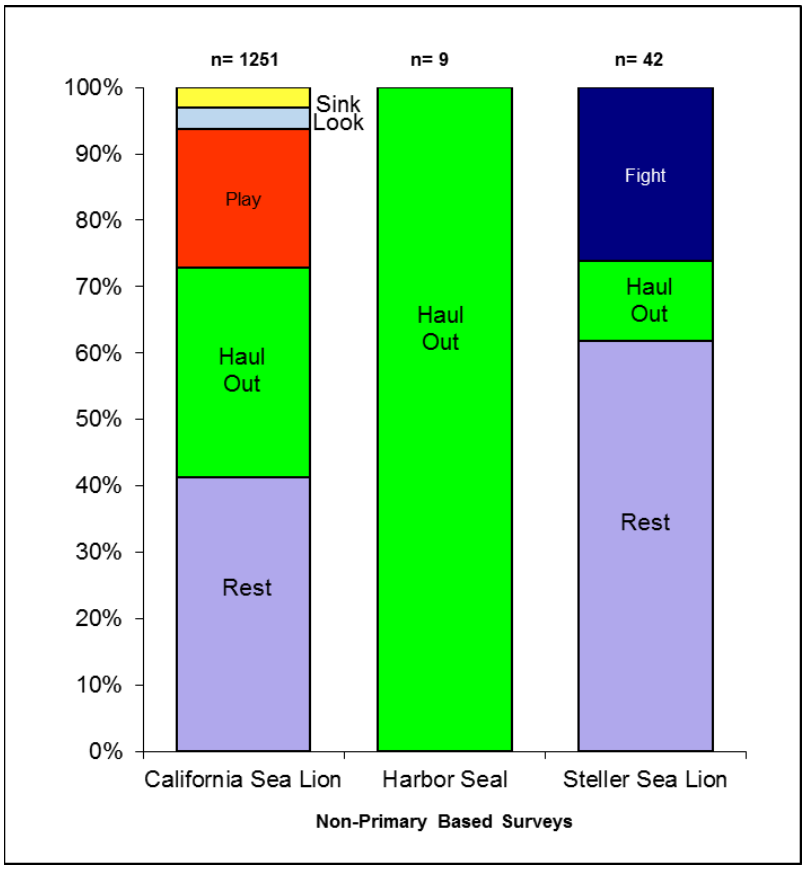

Figure 12. Marine Mammal Behaviors: Non-Primary Based Surveys

Summary of Quantitative Analysis. During periods of construction other than pile driving events, marine mammals were most frequently observed swimming parallel or having no relative motion to the construction area (38%, n=561; **Figure 13**). During vibratory pile driving, marine mammals were equally observed moving away from the pile or having no relative motion (each 34%, n=80). There was also a slight increase in the percentage of animals that moved toward the pile during vibratory pile driving (31%, n=73) compared to non-pile driving periods (27%, n=397; **Figure 13**). During impact driving events, animals were most frequently observed moving away (38%, n=108) and moving parallel to or having no relative motion to the pile (35%, n=98). Marine mammals moved toward the pile as frequently during impact pile driving (27%, n=77) as during periods of no construction (27%, n=397).

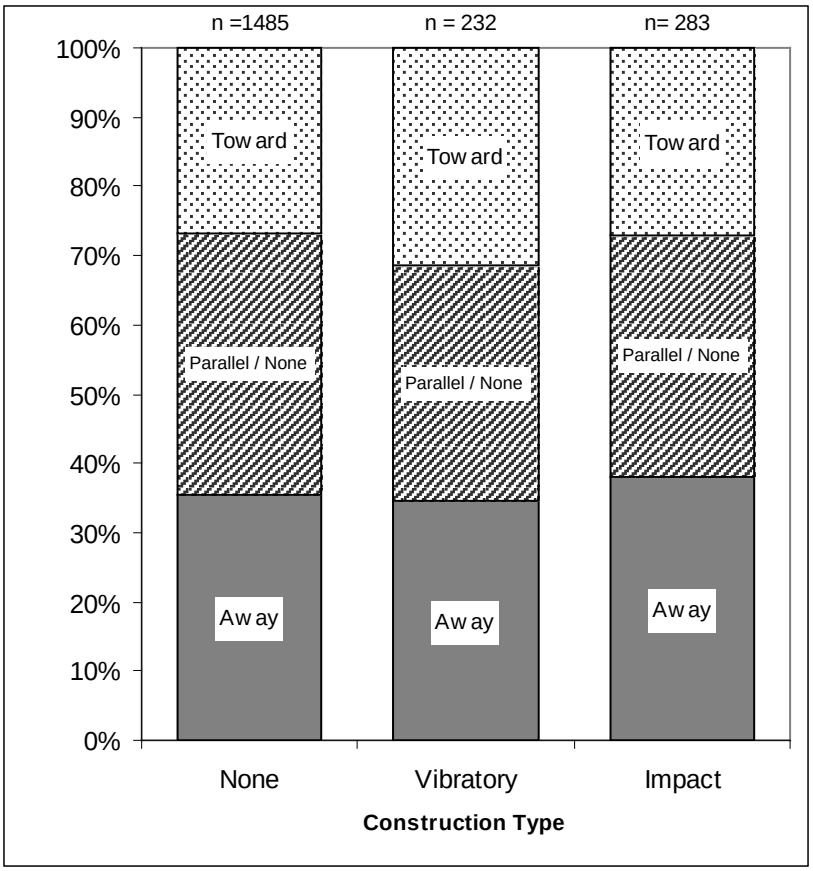

Figure 13. Relative Motion of Marine Mammals by Construction Event

California Sea Lion. California sea lion sightings in the buffer zone were infrequent. California sea lions were most frequently observed "swimming" and "traveling" during pre- and post-construction monitoring. Behaviors during non-construction and vibratory pile driving periods were similar: animals were seen frequently "swimming," "diving," and "traveling." Overall, California sea lions exhibited a similar range of behaviors during pile driving and non-pile driving periods, except that porpoising, which involves rapid transiting through the construction zone, was more prominent during pile driving periods. With only 19 observations during pile driving activity, trends should be interpreted with caution.

Harbor Seal. Harbor seals were by far the most frequently sighted marine mammal species during the Year 2 EHW-2 CMP. Harbor seals displayed a wide range of behaviors, but were more frequently observed "swimming" during construction monitoring periods than during non-construction periods. However, harbor seals exhibited a remarkably similar range of behaviors

during pile driving and non-pile driving periods, a trend that is supported by the large sample size of sightings and anecdotal evidence from observers.

Steller Sea Lion. The small sample size of Steller sea lions makes identifying trends difficult. Steller sea lions were only observed hauled out on or near submarines and never during pile driving.

Qualitative Behavioral Observations. MMOs made a number of qualitative observations on the movements and distribution of animals, and on the potential effects of pile driving activities on marine mammal behavior during the Year 2 EHW-2 CMP, in addition to the quantitative results presented above. In the areas where pile driving was conducted, many animals observed were in transit, generally moving along a north-south axis parallel to the shoreline. Aside from these sightings, observations of pinnipeds were generally of single animals, of which the majority (>97%) were harbor seals.

Understanding that subjective observations can be a useful adjunct to quantitative measurements, the MMOs were asked on a daily basis whether they had observed any behaviors consistent with injury, distress, or high-speed flight from the construction area. For pinnipeds, they did not report any such observations. In addition, the MCs on many occasions asked the marine mammal observers to watch an individual seal or sea lion just as impact or vibratory driving commenced to look for any instantaneous change in behavior potentially associated with the onset of pile driving noise. In some cases, individual animals would submerge with the onset of pile driving, or would begin swimming away from the construction site. However, in many other cases, individual animals did not exhibit any change in behavior with the onset of pile driving. Occasionally, harbor seals that had not been observed near the pile field appeared near or inside the shutdown zone during impact pile driving. Based on these qualitative observations the MMOs generally felt that the behaviors of harbor seals and California sea lions did not indicate adverse reaction to in-water construction activities. There was no indication that there were any differences in behaviors for harbor seals responding to vibratory versus impact pile driving. This is consistent with the quantitative analysis presented above.

An accidental spill of diesel and other unknown substances occurred within the WRA from Navy operations independent of EHW-2 on the afternoon of 10 February 2014. The use of the bubble

curtain was suspended during this time due to human health concerns; specifically, the potential of the bubble curtain for volatilizing toxic chemical compounds in the water, or for creating airborne particulates containing spill material. Impact driving occurred on each of the three days that bubble curtain use was curtailed. Because surveys during days with impact driving involve the use of a moving vessel and additional marbled murrelet observers who often call out mammal sightings to the MMOs, observers had a very high confidence of detecting marine mammals within the construction area during this three-day period. There were nine sightings of marine mammals after the spill, all of which were harbor seals (**Table 11**). Of these nine, there were three harbor seal sightings during impact pile driving without use of the bubble curtain, with the closest sighting 45 m from the pile, and two others at approximately 150 m from the pile (i.e., all sightings were outside of the 20-m shutdown zone). These individual animals were observed swimming or resting, and did not exhibit behaviors consistent with injury or distress. These behaviors were similar to those observed when sound attenuation from a bubble curtain was present. Recorded observations of marine mammal behaviors after the spill did not indicate any adverse effect from impact pile driving (**Table 11**).

Table 11. Sightings Following 10 February 2014 Spill

Date	Start Time	End Time	Sighting cue	Dist. To Animal (m)	Dir. To Animal (deg)	Dist. To Pile (m)	# of animals	Relative motion	Behav. code	Behav. 2	Const. type	Mitigation type
2/10/2014	14:34:22	14:34:29	RE	100	120	220	1	None	RE	SI	V	NONE
2/13/2014	8:21:04	8:21:52	RE	45	190	100	1	None	RE	SI	NONE	NONE
2/13/2014	11:32:05	11:32:14	RE	50	90	200	1	None	RE	--	NONE	NONE
2/13/2014	14:12:09	14:12:15	SW-S	50	280	150	1	Away	SW-S	--	I	NONE
2/13/2014	16:56:13	16:56:22	RE	25	49	45	1	Toward	RE	SW-W	I	NONE
2/13/2014	17:12:12	17:12:29	SW-S	40	90	150	1	Toward	SW-S	--	I	NONE
2/13/2014	9:19:40	9:20:13	SW-SW	60	150	170	1	Away	SW-SW	DI	NONE	NONE
2/14/2014	8:42:03	8:42:40	SW-S	200	200	--	1	None	SW-S	SI	NONE	NONE
2/14/2014	10:29:53	10:29:54	RE	30	90	150	1	None	RE	DI	NONE	NONE

Three dead harbor seals were observed during the Year 2 EHW-2 CMP:

- On 25 July 2013, Hart Crowser was notified by the contractor of a dead harbor seal that was hauled out in a workboat near the construction site. EHW Constructors had independently contacted the Navy as to the animal's location and disposition as it occurred before Hart Crowser's biologists arrived for work on that day. NMFS was contacted on 25 July 2013. WDFW personnel, acting on delegated authority from NMFS, came onto the base and conducted a necropsy on the seal on 26 July 2013.

- On 24 October 2013, Hart Crowser notified the contractor of a dead harbor seal that had floated within the construction work area. The observers contained the seal adjacent to the monitoring boat; they noted that it was decapitated and that its death therefore was not likely caused by the project. The contractor then notified the Navy of the animal's location and disposition. The Navy contacted NMFS and directed the contractor and Hart Crowser to release the seal, which drifted out of the area on the tide.

- On 14 November 2013, Hart Crowser notified the contractor of a dead harbor seal floating into the construction work area. Observers noted that the seal appeared to be dead for at least a couple of days due to the level of decomposition, and that the death was therefore not likely caused by the project. The contractor then informed the Navy of the animal's location and disposition. The Navy contacted NMFS, and the seal was monitored by Hart Crowser biologists until it floated north out of sight.

Environmental Data

Environmental data can be found in **Appendix G** and are summarized by week in **Figures 14** and **15**. Average weekly air temperatures fluctuated from 65 degrees Fahrenheit (° F) in July to the lowest recorded average temperature of 31° F in early February. Water temperatures steadily decreased from 53° F to 44° F by mid-February when monitoring ended. Neither air nor water temperatures had any effect on the observers' ability to identify marine mammals within the WRA.

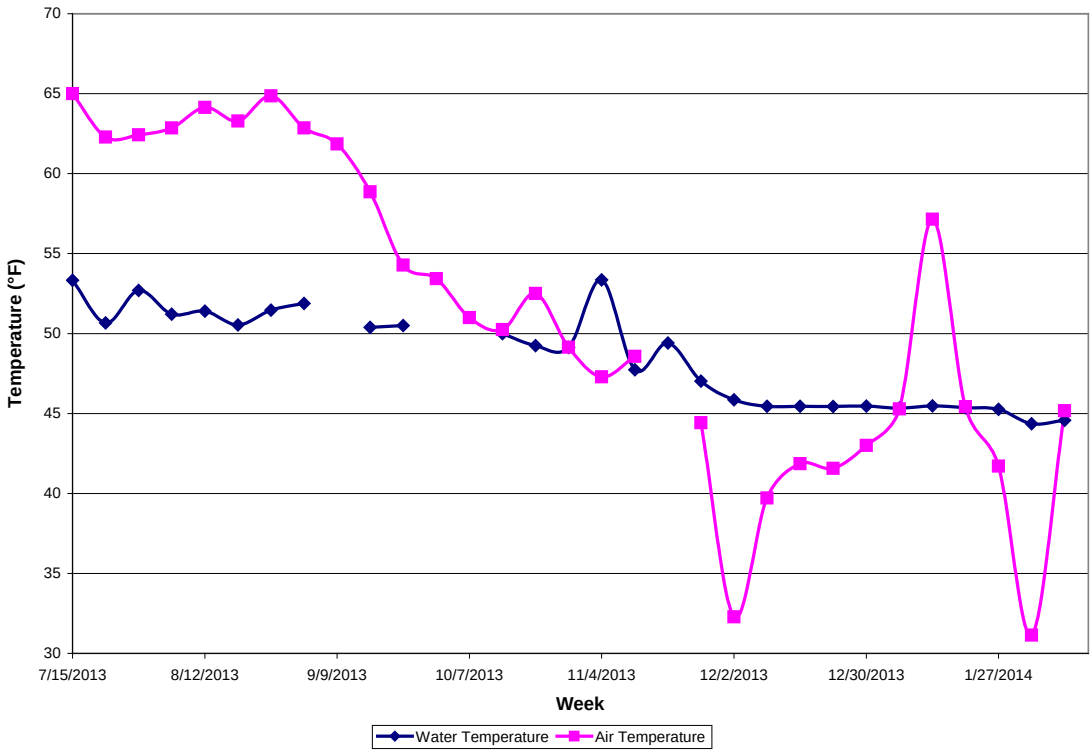

Figure 14. Average Air and Water Temperatures in the WRA

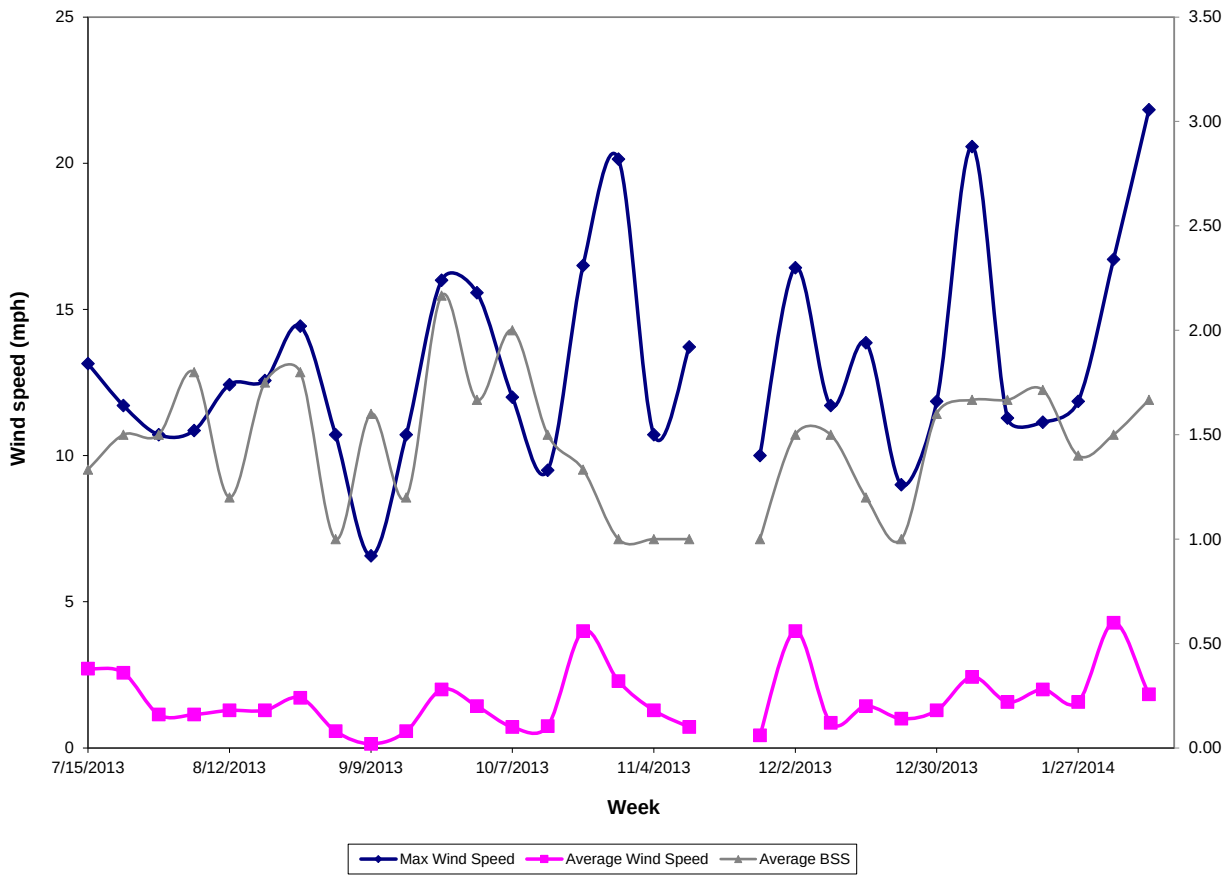

Figure 15. Wind Speed in the WRA

Average weekly wind speeds ranged from 0 to 4.3 miles per hour (mph), with the maximum wind speed of 29 mph on 19 December 2013 (no impact pile driving occurred during high wind periods due to the Marbled Murrelet Monitoring Plan protocol limiting sea state to less than BSS 3 during impact pile driving; **Figure 15**). Wind speeds did not result in unacceptable visibility ranges during pile driving activity, and resulted in a maximum BSS 3 (typically BSS 1–2). Observers found that localized wind "chop" was the primary determinant of the quality of viewing conditions. This benefited observers in the WRA as conditions in this area were generally calmer due, in part, to the location of the project area between EHW-1 and Marginal Wharf and in part, to the security fence, which provided a degree of shelter and dissipated wind and wave energy from the open waters of Hood Canal. Construction barges and boats also tended to reduce sea state in the vicinity of the construction work area.

Section 4 Recommendations

1. In order to ensure the effectiveness of the sound attenuation bubble curtain, crews should continuously monitor to make certain the bottom ring rests on the seafloor. The bubble curtain often did not extend to the seafloor due to inadequate bubble curtain length. Hart Crowser suggests that in Year 3 it measure water depth throughout the day to account for tidal changes and that the crews be instructed to adjust the bubble equipment accordingly to ensure the length of the setup is adequate to reach the seafloor.
2. Improvements were made to the bubble curtain design to address issues identified during the Year 1 EHW-2 CMP. One significant improvement was that each ring was controlled separately and required pile driving crews to open valves to attain correct pressures to each ring. These values were measured when accessible by the MC. However, these flow gauges were often not functional or crews set the rings to a specific pressure. Different pressure requirements needed to regulate flow at different depths were not fully implemented due to failure of some of the pressure gauges. In Year 3, more attention to ensuring functioning gauges and even flow across rings is advised.
3. No harbor porpoise were observed during the Year 2 EHW-2 CMP. This is likely because harbor porpoise did not enter the WRA, and no outside boat was positioned in the main channel of Hood Canal where porpoise are present. Without the outside boat MMO, there is no means of evaluating behavioral changes of harbor porpoise during vibratory driving. If observations of harbor porpoise or other cetacean baseline behaviors and changes in behavior during pile driving are desired, MMO surveys outside the WRA would likely be required.
4. Co-locating one MMO on the boat in the WRA with marbled murrelet observers worked well during the Year 2 EHW-2 CMP. Marbled murrelet observers sometimes made observations that they then “handed off” to the MMO. It is recommended that future versions of the Marine Mammal and Marbled Murrelet Monitoring Plans formally include this approach.

Section 5 List of Preparers

Jeffrey Barrett, Ph.D.
Hart Crowser
Principal-in-Charge and Lead Biologist/Monitoring Coordinator/Observer

Hans Hurn
Hart Crowser
Project Manager, Monitoring Coordinator/GIS and Data Analysis

Emily Duncanson
Hart Crowser
Monitoring Coordinator/Database Manager/Data Analysis

Beth Sosik
Observer/Data Analysis

Section 6 References

DoN, 2012. Final Marine Mammal Monitoring Plan. Trident Support Facilities Explosives Handling Wharf (EHW-2). Naval Base Kitsap at Bangor, Silverdale, Washington. July, 2012.

DoN, 2013. Naval Base Kitsap-Bangor Explosives, Handling Wharf 2 Draft Year 1 Marine Mammal Monitoring Report (2012–2013), Bangor, Washington. Prepared by Hart Crowser for Naval Facilities Engineering Northwest, Silverdale, Washington. April 2013.

DoN, 2014. Naval Base Kitsap-Bangor, Explosives Handling Wharf 2, Bangor, Washington. Draft Year 2 Marbled Murrelet Monitoring Report. Prepared by Hart Crowser, Inc. for Naval Facilities Engineering Northwest, Silverdale, Washington. March 2014.

Illingworth & Rodkin Inc., 2013. Naval Base Kitsap at Bangor EHW-2 Construction Monitoring Program, Bangor, Washington. Draft Marine Acoustic Monitoring Report. Prepared for Hart Crowser Inc., Seattle, Washington and Naval Facilities Engineering Northwest, Silverdale, Washington. March 2013.

National Marine Fisheries Service (NMFS), 2013. Incidental Harassment Authorization to take small numbers of marine mammals, by Level B Harassment only, incidental to a pile replacement project in the Hood Canal, Washington. Issued July 13 2013.

National Oceanic Atmospheric Administration (NOAA), 2013. NOAA Removes the Eastern Stellar Sea Lion from the Endangered Species Act List. Accessed March 6 2013. https://alaskafisheries.noaa.gov/newsreleases/2013/easternssl102313.htm.

APPENDIX A

Department of the Navy Trident Support Facilities
Explosives Handling Wharf (EHW-2)
Final Marine Mammal Monitoring Plan

Final

Marine Mammal Monitoring Plan

TRIDENT SUPPORT FACILITIES
EXPLOSIVES HANDLING WHARF (EHW-2)

NAVAL BASE KITSAP at BANGOR
SILVERDALE, WA

July 2012

DEPARTMENT OF THE NAVY

TABLE OF CONTENTS

1.0 INTRODUCTION **3**

2.0 ACTION AREA **3**

3.0 METHODS **4**

3.1. OBSERVER QUALIFICATIONS 4
3.2. DATA COLLECTION 8
3.3. EQUIPMENT 8
3.4. SHUTDOWN AND BUFFER ZONES 9
3.5. OBSERVER MONITORING LOCATIONS 11
3.6. MONITORING TECHNIQUES 12
3.6.1. Visual Survey Protocol – Pre-Activity Monitoring 15
3.6.2. Visual Survey Protocol – During Activity Monitoring 15
3.6.3. Visual Survey Protocol – Post-Activity Monitoring 17
3.6.4. Acoustic Measurements 17

4.0 INTERAGENCY NOTIFICATION **17**

5.0 MONITORING REPORTS **18**

6.0 REFERENCES **20**

LIST OF FIGURES

Figure 1. EHW-2 Action Area 5
Figure 2. Distance to NMFS Underwater Noise Thresholds for Marine Mammals 6
Figure 3. Distance to NMFS Airborne Noise Thresholds for Marine Mammals 7
Figure 4. Representative Marine Mammal Monitoring Locations within the Underwater Noise Thresholds for Impact and Vibratory Pile Driving 13
Figure 5. Representative Shutdown Zones for Marine Mammal Monitoring Locations within the Waterfront Restricted Area 14

LIST OF APPENDICES

A Marine Mammal Observation Record Form
B Beaufort Wind Scale
C Chain of Custody Form

This page is intentionally blank.

1.0 INTRODUCTION

The purpose of this monitoring plan is to provide a protocol for marine mammal monitoring during the proposed construction of the second Explosives Handling Wharf (EHW-2) at the Naval Base Kitsap (NBK) at Bangor, WA waterfront. This plan was developed to support the respective Biological Assessment (BA) and Incidental Harassment Authorization (IHA) documents for ESA and MMPA permitting. Those documents provide a more in-depth discussion on the modeling assumptions and calculations for the project and are incorporated here by reference.

Marine mammal monitoring will be conducted before, during, and after pile driving activities, within the areas that are estimated to be encompassed by the airborne and underwater injury or behavioral disturbance thresholds. Acoustic monitoring (see Navy's Acoustic Monitoring Plan) will be used to determine the distances to the injury and behavioral disturbance zone isopleths and the visual marine mammal monitoring survey protocols will be adjusted accordingly (either larger or smaller survey areas) to encompass the actual zones of influence.

2.0 ACTION AREA

The action area includes "all areas to be affected directly or indirectly by the federal action and not merely the immediate area involved in the action" (50 CFR § 402.02). Specifically, the action area is defined as the geographic extent of physical, biological, and chemical effects of the action above baseline conditions. The action area boundary takes into account how the action's physical, chemical, and biotic effects (stressors) move across the landscape, through direct and indirect pathways, over time, to identify the spatial and temporal scale of the action area (WSDOT 2011).

Construction of the EHW-2 will generate both airborne and underwater sound from impact and vibratory pile driving. To determine which noise effect extended the farthest, sound propagation was modeled and compared to ambient levels.

The ambient noise levels at NBK at Bangor were previously measured over a one month period in the summer of 2007 (July 10 – Aug 14) (Slater 2009). The underwater sound measurements were conducted at several locations in the vicinity of the project area. The location closest to the project area, designated as Marginal Wharf in the report, recorded data from two hydrophones deployed 300-500 feet north of the Marginal Wharf. Recordings were made 5 minutes per hour throughout the entire study period (Slater 2009). Average underwater broadband ambient noise levels near the project site were 114 dB RMS re: 1 microPascal (dB re 1μPa) between 100 hertz (Hz) and 20 kilohertz (kHz). Airborne noise levels at the NBK at Bangor waterfront in the daytime ranged between 60 and 104 dBA (decibels in the A-weighted scale) and averaged 64 dBA; night levels ranged between 64 and 96 dBA, averaging 64 dBA, consistent with other urbanized environments where equipment is operating.

Baseline underwater and airborne noise measurements were also conducted during the Test Pile Program (TPP) at NBK at Bangor from August – October 2011. Underwater ambient levels recorded during the TPP were consistent with those previously reported in Slater (2009). Recordings made in the middle of the Hood Canal approximately 2,200-2,300 meters from the pile averaged 114 dB RMS re: 1 microPascal between 50 Hz and 20 kHz. Ambient airborne data was collected at locations farther from the wharves than during prior data collection efforts, in order to reduce the potential for acoustic contributions from waterfront activities being

incorporated into the ambient environment. Measurements were generally made between 125 – 550 meters from the pile, along the shoreline between EHW-1 and Marginal Wharf. Airborne ambient levels averaged 55 dBA Leq re: 20 microPa between 25 Hz and 20 KHz.

Using the practical spreading loss model for transmission ($15*\log_{10}[R_1/R_2]$, where R_1 is the distance of the modeled sound pressure level from the driven pile, and R_2 is the distance from the driven pile of the initial measurement), it was determined that underwater sound from vibratory pile driving was the stressor identified to have the furthest geographic distribution to be distinguishable above ambient conditions. Sound generated from vibratory pile driving would intersect land masses (e.g., Toandos Peninsula) prior to attenuating to measured background levels. As such, the geographic boundary of the Action Area was defined by the line-of-sight intersection of land and water and is shown on Figure 1.

To determine the potential areas in which marine mammal monitoring may be required for monitoring, the Navy modeled the sound propagation out to defined threshold criteria from sound pressure levels anticipated for impact and vibratory pile driving during EHW-2 construction. Figures 2 and 3 depict the anticipated extent of underwater and airborne zones of influence based on the various marine mammal threshold criteria.

3.0 METHODS

3.1. OBSERVER QUALIFICATIONS

Monitoring will be conducted by qualified, trained marine mammal observers (hereafter, "observer"). An observer is a biologist with prior training and experience in conducting at-sea marine mammal monitoring or surveys, and who has the ability to identify marine mammal species and describe relevant behaviors that may occur in proximity to in-water construction activities. A trained observer will be placed at the best vantage point(s) practicable (e.g., from a small boat, the pile driving barge, on shore, or any other suitable location) to monitor for marine mammals and implement shutdown/delay procedures when applicable by calling for the shutdown to the hammer operator. The observers will have no other construction related tasks while conducting monitoring.

A dedicated monitoring coordinator will be on-site during all construction days. The monitoring coordinator will oversee the environmental monitoring staff including all acousticians, marine mammal observers, and marbled murrelet observers. The monitoring coordinator will serve as the liaison between the environmental monitoring staff and the construction contractor to assist in the distribution of information.

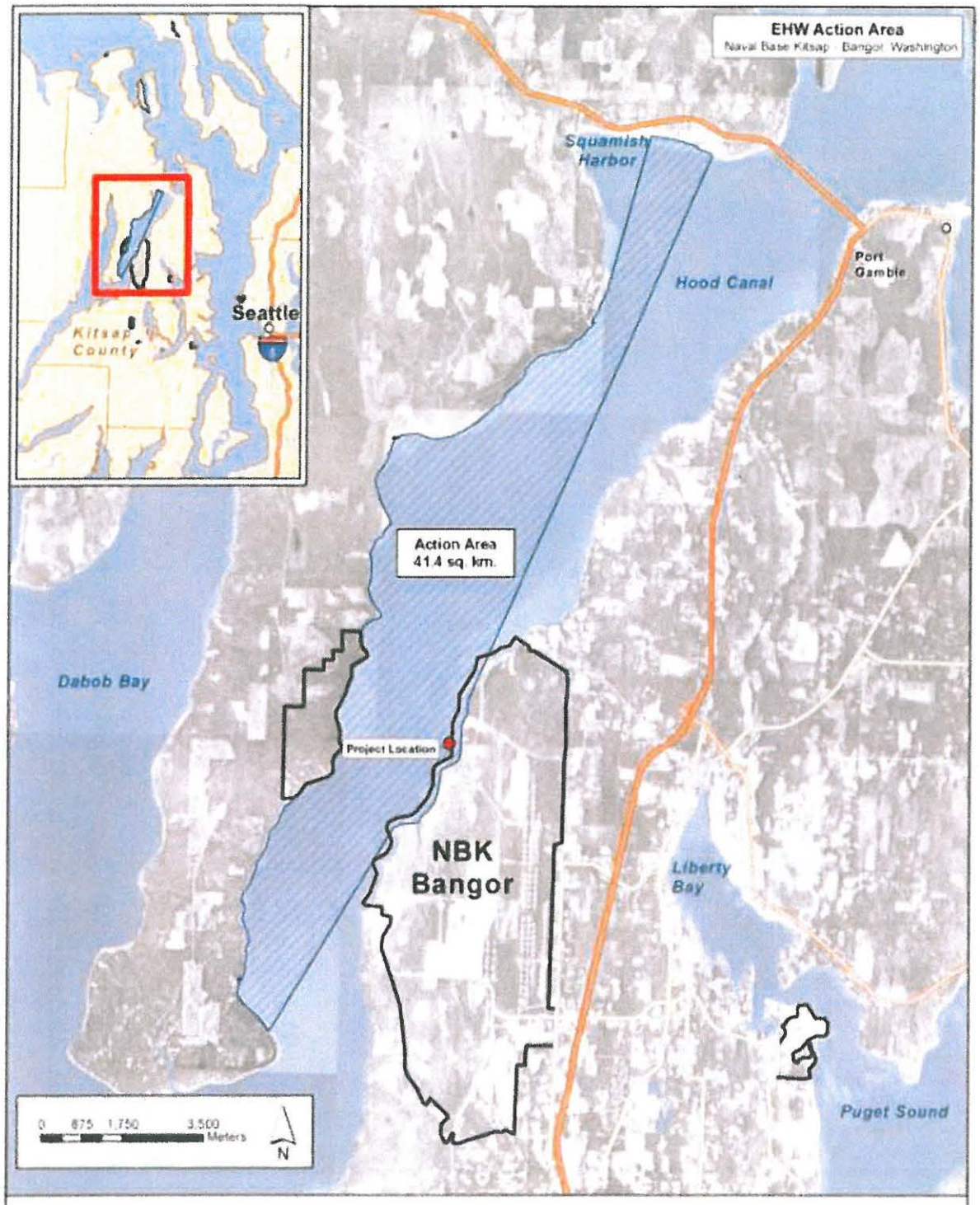

Figure 1. EHW-2 Action Area

The distances to and the area encompassed by the underwater noise thresholds for cetacean and pinnipeds for concurrent impact and vibratory pile driving are shown in Figure 2.

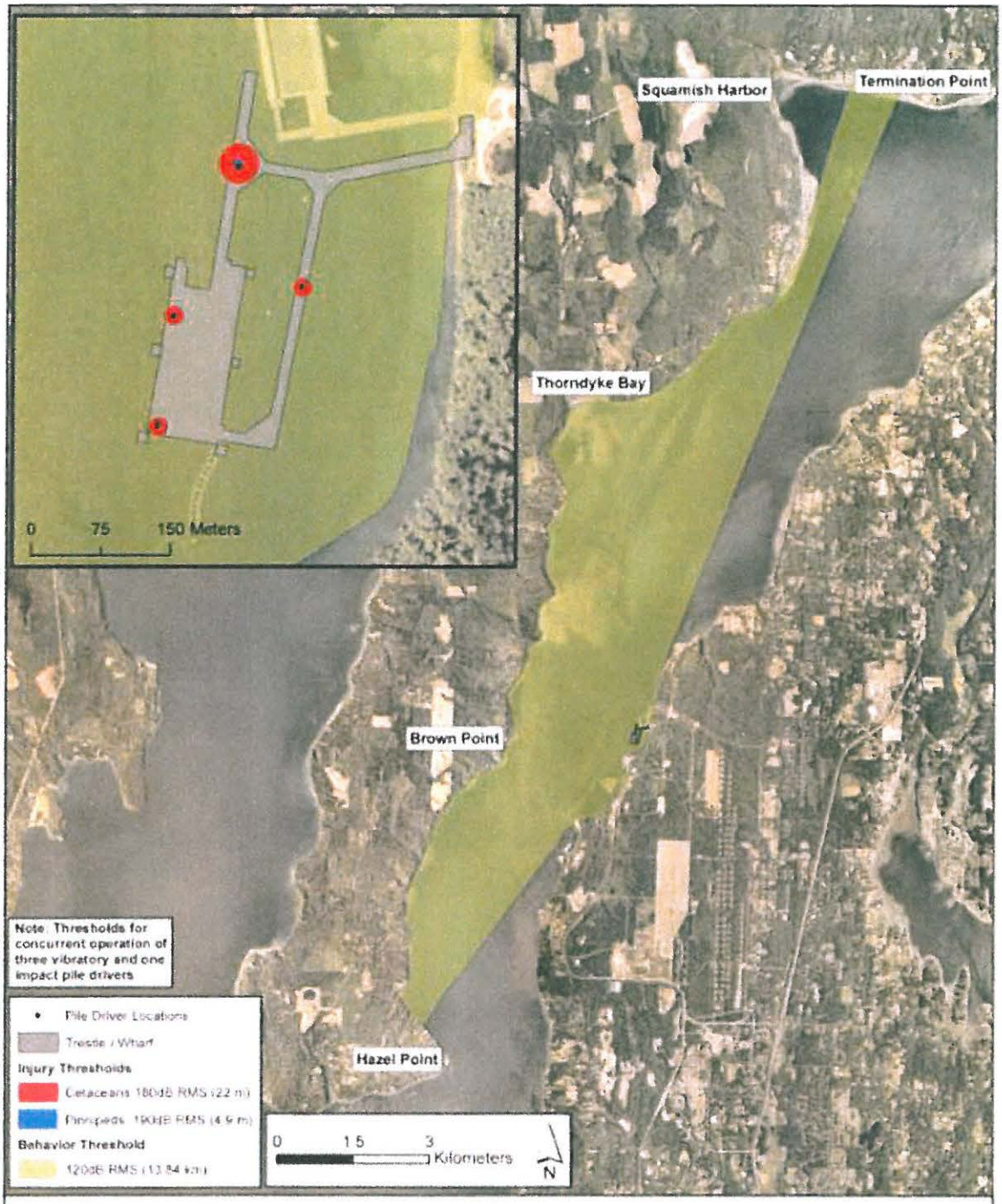

Figure 2. Distance to NMFS Underwater Noise Thresholds for Marine Mammals

Figure 3 indicates the airborne noise thresholds for harbor seals and other pinnipeds, for concurrent impact and vibratory pile driving.

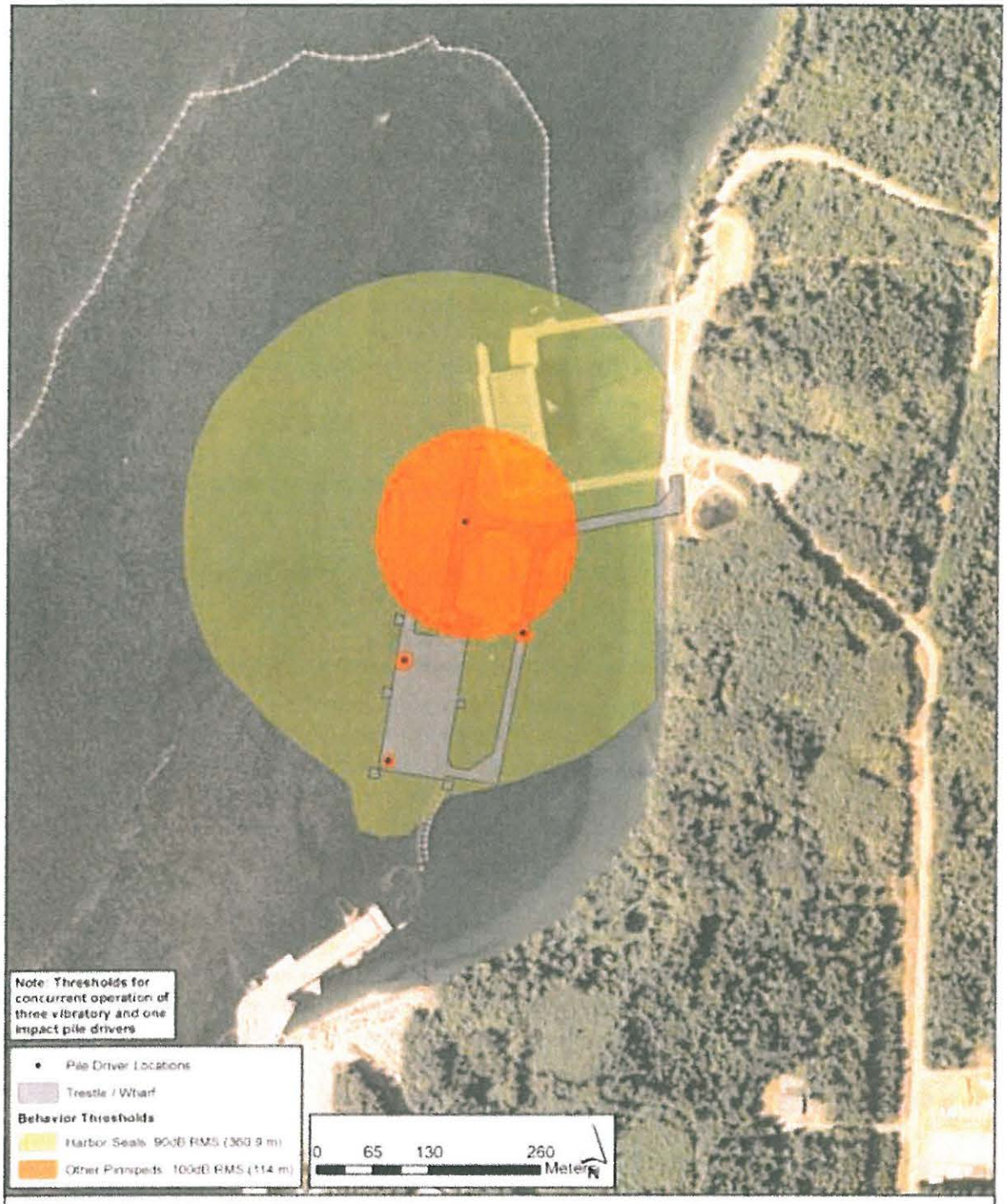

Figure 3. Distance to NMFS Airborne Noise Thresholds for Marine Mammals

3.2. DATA COLLECTION

Observers will use a NMFS-approved Marine Mammal Sighting Form (Appendix A) which will be completed by each observer for each survey day.

- Date and time that pile driving begins or ends;
- Construction activities occurring during each sighting;
- Weather parameters (e.g. percent cover, percent glare, visibility);
- Water conditions (e.g. Tidal state [incoming (flood), slack (neither direction), or outgoing (ebb)], and sea state). The Beaufort Sea State Scale (Appendix B) will be used to determine sea-state.
- Species, numbers, and if possible, sex and age class of marine mammals;
- Marine mammal behavior patterns observed, including bearing from observer and direction of travel. If possible, include the correlation to sound pressure levels for context;
    - Specific focus should be paid to recording behavioral reactions just prior to or during soft-start and shutdown procedures
- Distance from pile driving activities to marine mammals and distance from the marine mammal to the observation point;
- Record of whether an observation required the implementation of shutdown procedures and the duration each shutdown.
- Locations of all marine mammal observations;
- Other human activity in the area. Record the hull numbers of fishing vessels if possible.

3.3. EQUIPMENT

The following equipment will be required to conduct marine mammal monitoring:

- Survey boats (with flying bridge for elevated observations) will include: covered cabin areas to keep electrical equipment dry, a fixed marine radio for the Captain to communicate on Ch. 16 and other marine channels independent of observers communicating on a dedicated channel, depth finder, measuring tape, navigational plotting equipment, and both fixed and hand-held GPS Units. Vessels will comply with all Coast Guard regulations and be able to pass a Coast Guard safety inspection;
- Hearing protection for biologists and boat operators within the airborne impact injury zone;
- Portable marine radios and headsets for the observers to communicate with the monitoring coordinator, construction contractor, and other observers;
- Cellular phones, without a camera (one per boat/observing location), and the contact information for the other observers, monitoring coordinator, and NMFS point of contact;
- Green flags (one per boat/observing location) as back-up for radio communication;
- Red flags (one per boat/observing location) as back-up for radio communication;
- Nautical charts;
- Daily tide tables for the project area within the Hood Canal;
- Watch or Chronometer;
- Binoculars with built-in rangefinder or reticles – (quality 7 x 50 or better);
- Monitoring plan, IHA permit, and/or other relevant permit requirement specifications in sealed clear plastic cover;

- Notebook with pre-standardized monitoring Marine Mammal Observation Record forms on non-bleeding paper (e.g Rite-in-the Rain);
- Marine mammal identification guides on waterproof paper
- Clipboard
- Pen / Pencil

3.4. SHUTDOWN AND BUFFER ZONES

The acoustic modeling results presented within the Draft Environmental Impact Statement and the request for an Incidental Harassment Authorization were used to develop the shutdown zones for pile installation activities associated with the EHW-2. While the acoustic zones of influence vary between the different diameter piles and installation methods, the Navy established shutdown zones based on the maximum zone of influence for pile installation activities (see analysis in compliance documents for details). The shutdown zones were created to delineate areas in which marine mammals may be exposed to injurious underwater sound levels due to pile driving. Marine mammal monitoring will also occur for additional areas beyond the shutdown zone where sound pressure levels may cause harassment. Monitoring of these zones and the implementation of other minimization measures, such as the use of sound attenuation devices, will reduce the impacts of underwater sound from pile driving to these species.

Shutdown and Buffer Zone (*Impact and Vibratory pile driving/removal*):

- During impact pile driving/removal the shutdown zone shall include all areas where the underwater SPLs are anticipated to equal the Level A (injury) harassment criteria for marine mammals (180 dB isopleths for cetaceans; 190 dB isopleths for pinnipeds). For pinnipeds the shutdown distance will be 20 meters[1] from the pile and for cetaceans the shutdown distance will be 85 meters[2] from the pile.
- During vibratory pile driving/removal involving multiple pile driving rigs, the shutdown zone shall include all areas where the underwater SPLs are anticipated to equal the Level A (injury) harassment criteria for marine mammals (180 dB isopleths for cetaceans; 190 dB isopleths for pinnipeds). For pinnipeds the shutdown distance will be 10 meters[3] from the pile and for cetaceans the shutdown distance will also be 10 meters[4] from the pile.
- All shutdown zones will initially be based on the distances from the source which were predicted for each threshold level. However, in-situ acoustic monitoring will be utilized to determine the actual distances to these threshold zones, and the size of the shutdown zones will be adjusted accordingly (increased or decreased) based on received sound pressure levels. The Navy will use near-field and far-field attended hydrophones and SLMs to record the vibratory and impact pile driving signals. At the end of the acoustic

[1] The modeled injury threshold distance for pinnipeds for one impact pile driver is approximately 5 meters, but the Navy has increased this distance up to 20 meters based on in-situ recorded sound pressure levels during the TPP which indicated the pinniped injury zone more consistently extended up to 20 meters from the pile.
[2] The modeled injury threshold distance for cetaceans for one impact pile driver is approximately 22 meters, but the Navy has increased this distance up to 85 meters based on in-situ recorded sound pressure levels during the TPP which indicated the cetacean injury zone more consistently extended up to 85 meters from the pile.
[3] The actual modeled injury threshold distance for pinnipeds for three vibratory pile drivers is approximately 2.3 meters, but the Navy has rounded this distance up to 10 meters to be consistent with the shutdown zone for in-water non-pile driving activities.
[4] The modeled injury threshold distance for cetaceans for three vibratory pile drivers is 10 meters.

monitoring period, the data will be processed and the injury and behavioral disturbance zones will be calculated and compared to previous modeling. The Navy anticipates that acoustic data collection will be completed prior to the end of the first in-water work window and will attempt to determine as quickly as possible whether revisions in the size of the shutdown or buffer zones are warranted based on the in-situ data. Realistically, based on the experience of processing the TPP and EHW-1 acoustic data sets and the expected need for follow-up discussions with NMFS, the Navy expects that revisions in the size of the shutdown and buffer zones would be implemented as part of subsequent IHA applications for the second and third years of construction at EHW-2.

- During impact pile driving/removal the buffer zone shall include all areas where the underwater or airborne SPLs are anticipated to equal or exceed the Level B (disturbance) harassment criteria for marine mammals during impact pile driving (160 dB isopleth). For pinnipeds and cetaceans the buffer zone would be approximately 464 meters and would be encompassed by the area inside the WRA fence line in the immediate vicinity of the EHW-2 footprint.
- During vibratory pile driving, the Level B (disturbance) harassment criterion (120 dB isopleth) predicts an affected area of 41.4 sq km (16 sq mi). The size of this area would make effective monitoring impractical. As a result, a buffer zone of 464 meters, equivalent to the size of the predicted 160 dB isopleth, will be monitored for pinnipeds and cetaceans during all vibratory pile driving/removal activities. This distance would serve as a guideline for the placement of marine mammal observing platforms and would be considered the minimum area covered; however, marine mammal observers would record all marine mammal sightings which are visually feasible, including those beyond the 464 meter "buffer zone". All sightings would be recorded and potential takes would be noted. The definitive determination of any "take", however, would be determined after post-processing of the acoustic data to compare the sighting distance to the actual extent of any harassment zones.
- The shutdown and buffer zones will be monitored throughout the time required to drive or remove a pile. If a marine mammal enters the buffer zone, an exposure would be recorded and behaviors documented. However, the pile segment would be completed without cessation, unless the animal approaches or enters the shutdown zone around any of the pile driving rigs. If a marine mammal approaches or enters the shutdown zone around any rig, all pile driving/removal activities associated with that rig will immediately be halted. Pile driving may proceed at other rigs as long as marine mammals have not been sighted within the shutdown zones associated with those rigs.
- Under certain construction circumstances where initiating the shutdown and clearance procedures (which could include a delay of 15 min or more) would result in an imminent concern for human safety, the shutdown provision may be waived at the discretion of the construction foreman. A pile may be deemed "dangerous" if the implementation of the shutdown procedures would: 1) constitute a significant hazard to the personnel installing/removing the pile, 2) result in a great risk of causing damage to an existing structure (either EHW-1 or newly constructed portions of EHW-2), or 3) create a risk of the pile slipping from the cradle during shutdown procedures due to the angle of installation/removal (i.e. during batter pile installation/removal). The construction foreman would be required to coordinate with the monitoring coordinator at the start of

each construction day to identify in advance piles which may meet these criteria. The Navy would be notified daily of any piles for which shutdown procedures were waived and a written justification would be provided by the construction foreman documenting the necessity for waiving shutdown procedures. .

Shutdown Zone (*In-water construction activities not involving a pile driving hammer*):

- During in-water construction activities not involving a pile driver, but having the potential to affect marine mammals, in order to prevent injury to these species from their physical interaction with construction equipment, a shutdown zone of 10 meters (33 feet) will be monitored to ensure that marine mammals are not present in this zone.
- These activities could include, but are not limited to: (1) the movement of the barge to the pile location, (2) the positioning of the pile on the substrate via a crane (i.e., "stabbing" the pile), (3) the removal of the pile from the water column/substrate via a crane (i.e. "deadpull"), or (4) the placement of sound attenuation devices around the piles.
- Marine mammal monitoring will only occur for the period 15 minutes prior to the activity through the duration required to complete the in-water work.

3.5. OBSERVER MONITORING LOCATIONS

In order to effectively monitor the shutdown zones, marine mammal observers will be positioned at the best practicable vantage point(s), taking into consideration security, safety, and space limitations at the NBK waterfront, in order to properly monitor these zones. Observers may be stationed in small vessels or on the pile driving barge(s) at locations that will provide adequate visual coverage for the marine mammal shutdown and buffer zones. During pile driving of the abutment or some of the shallow trestle piles, due to the proximity to the shoreline and the difficulties in maneuvering a vessel in shallow water, an observer may alternatively be positioned on shore, but from an elevated platform to monitor the shutdown zone(s).

Security restrictions and operations inside the Waterfront Restricted Area (WRA) as defined by the area inside the Port Security Barrier (PSB) fence line, may also preclude the placement of boats/personnel at certain times and locations. For instance, security concerns regarding the number of vessels within the WRA have resulted in the Navy limiting the number of monitoring vessels for the acoustic, marine mammal, and marbled murrelet monitoring plans, in addition to the construction related vessels (i.e. barges, tugs, etc.). Additionally, security requires that all vessels maintain a minimum standoff distance of 25 feet from the PSB fence at all times. During operations that occur at the EHW-1 facility and Marginal Wharf, monitoring personnel may also be precluded from being stationed on/near these structures.

One observer will be placed at a suitable location around each active pile driving rig in order to observe the respective shutdown zones for vibratory and impact pile driving, as described in detail in Section 3.4, Shutdown and Buffer Zones. These observers' monitoring would be primarily dedicated to observing the shutdown zones, however, they would record all marine mammal sightings beyond these distances provided it did not interfere with their effectiveness at carrying out the shutdown procedures. Additionally, a vessel-based monitoring platform will be located approximately 100-400 meters from the pile to monitor the buffer zone(s) for vibratory and impact pile driving/removal activities, as described in detail in Section 3.4, Shutdown and

Buffer Zones. The observer associated with this platform would also record all visible marine mammal sightings beyond the buffer zone both within and outside of the WRA.

During the period of acoustic monitoring associated with EHW-2, a marine mammal observer will also be stationed on the acoustic vessel outside the WRA, towards the middle of the Hood Canal. The primary purpose of the vessel would be to record acoustic data in the far-field study area and to service two of the floating rafts for acoustic data recording. However, the marine mammal observer will be capable of any recording marine mammal sightings with this far-field area to further support marine mammal data collection. In addition, consistent with the monitoring protocols used during the TPP, any far-field observers would communicate with near-field observers to alert them to the potential for incoming marine mammal species approaching the WRA.

Potential observation locations are depicted in Figures 4 and 5. The exact positioning of the observer platforms/monitoring boats will vary as different pile driver types and pile locations become active within the footprint of the proposed EHW-2 facility. Each monitoring location/platform will have a minimum of 1 dedicated marine mammal observer (not including boat operators). At the start of the EHW-2 project when the maximum number of pile driving rigs (four) are expected to be on-site, there will be a minimum number of five marine mammals observers (one monitoring the shutdown zone at each of the four active rigs, and one monitoring the buffer zone within the WRA). As construction progresses and pile driving rigs are removed from operation, monitoring personnel associated with those locations will no longer be required and will be eliminated from the monitoring effort.

3.6. MONITORING TECHNIQUES

The Navy will collect sighting data and behaviors of marine mammal species observed in the shutdown zone and the immediate vicinity within the WRA during the period of construction. All observers will be experienced biologists trained in marine mammal identification and behaviors, as described in Section 3.1, Observer Qualifications. NMFS requires that the observers have no other construction-related tasks while conducting monitoring.

The efficacy of visual detection depends on several factors including the observer's ability to detect the animal, the environmental conditions (visibility and sea state), and monitoring platforms. Monitoring of the shutdown zones will take place from 15 minutes prior to initiation through 30 minutes post-completion of all pile driving and removal activities. Monitoring of the shutdown zones for other in-water construction activities as defined in Section 3.4 will take place from 15 minutes prior to initiation until the activity has been completed.

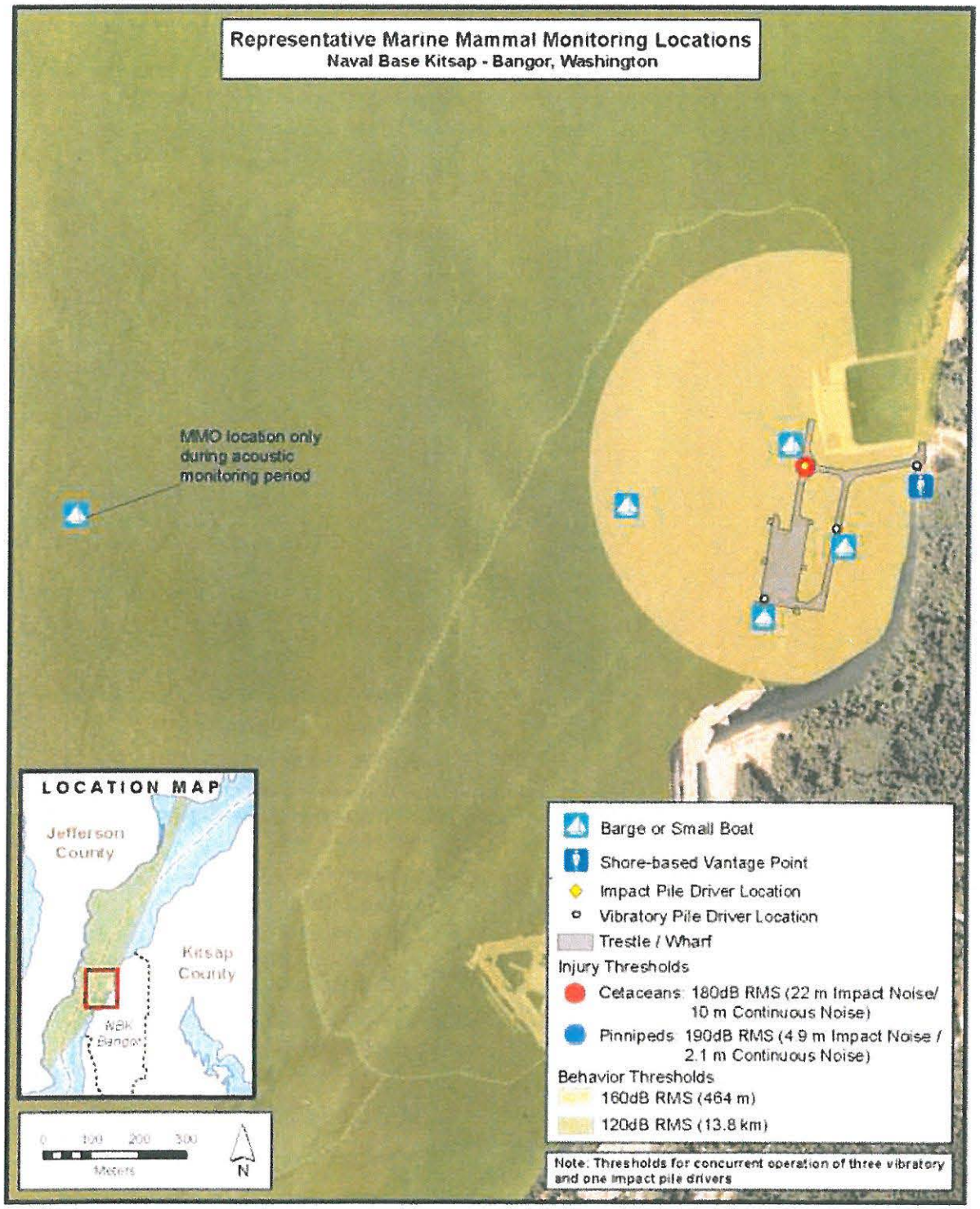

Figure 4. Representative Marine Mammal Monitoring Locations within the Underwater Noise Thresholds for Impact and Vibratory Pile Driving

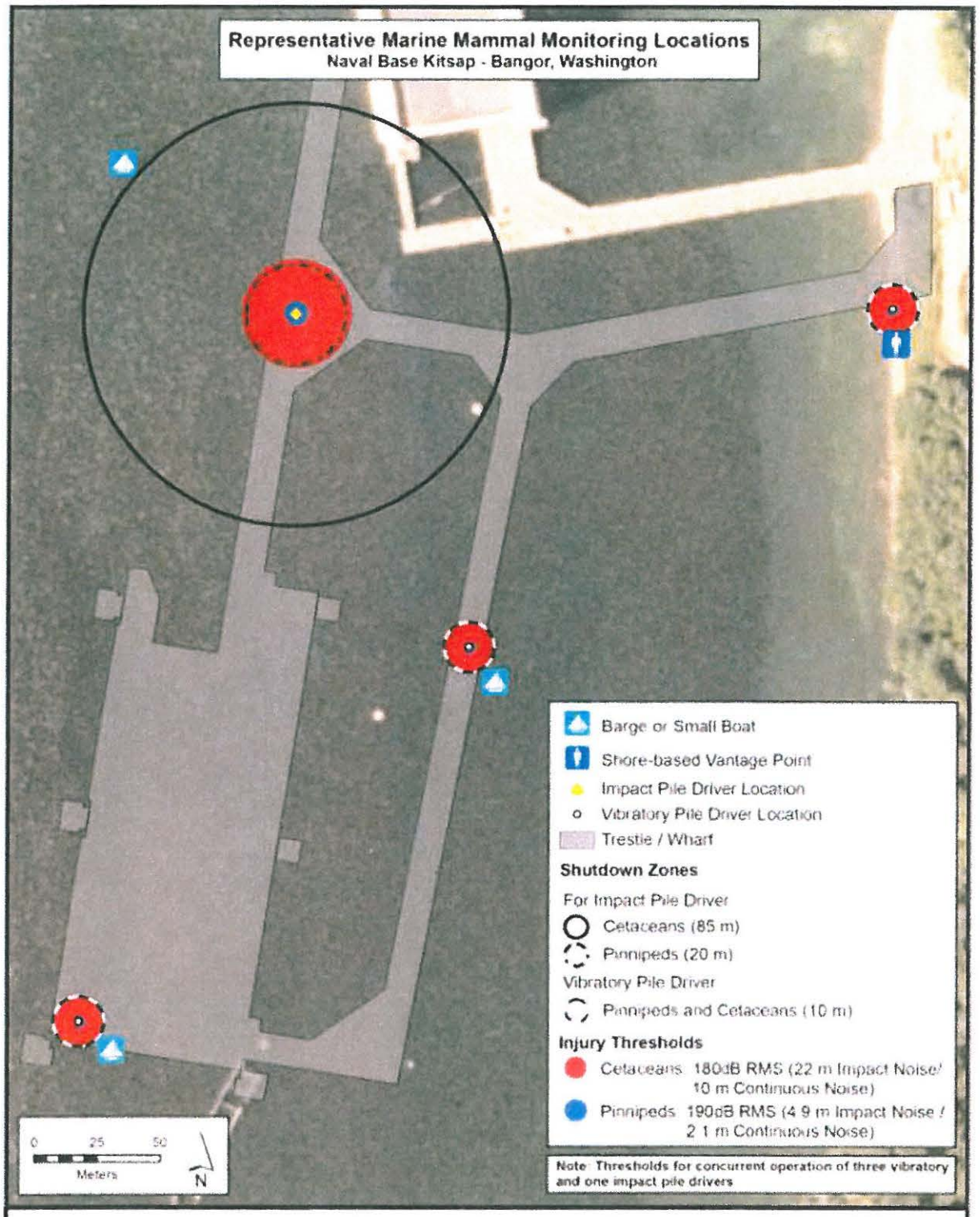

Figure 5. Representative Shutdown Zones for Marine Mammal Monitoring Locations within the Waterfront Restricted Area

3.6.1. Visual Survey Protocol – Pre-Activity Monitoring

Prior to the start of pile driving/removal or other in-water construction activities, the shutdown zone(s) will be monitored for 15 minutes to ensure that there are no marine mammals present. If concurrent marbled murrelet monitoring reveals that marbled murrelets are present within the shutdown zone for that species, pile driving will not start and surveys will continue until the marbled murrelets leave the shutdown zone voluntarily per the Marbled Murrelet Monitoring Plan. The following survey methodology will be implemented prior to commencing pile installation/removal or other in-water construction activities:

- Observers will survey the shutdown and buffer zone. They will ensure that no marine mammals are seen within the shutdown zone before pile-driving/removal or other in-water construction activities begin.
- If marine mammal(s) are present within or approaching the shutdown zone prior to pile driving/removal or other in-water construction activities,, the survey will continue and the start of these activities will be delayed until the animal(s) leave the shutdown zone voluntarily and have been visually confirmed beyond the shutdown zone, or 15 minutes has elapsed without re-detection of the animal.
- If marine mammal(s) are not detected within the shutdown zone (i.e. the zone is deemed clear of marine mammals), the observers will raise a green flag and radio the monitoring coordinator/construction contractor that pile driving/removal or other in-water construction activities can commence.
- If marine mammal(s) are present within the buffer zone, pile driving/removal or other in-water construction activities would not need to be delayed, but observers would monitor and document, to the extent practical, the behavior of marine mammals that remain in the buffer zone.
- Marine Mammal Observation Record forms (Appendix A) will be used to document observations.
- Any survey boats engaged in marine mammal monitoring will maintain speeds equal to or less than 10 knots.
- Observers will be trained and experienced marine mammal observers in order to accurately verify species sighted.
- Observers will use binoculars and the naked eye to search continuously for marine mammals.
- In case of fog or reduced visibility, the observers must be able to see the shutdown zones or pile driving/removal will not be initiated until visibility in these zones improves to acceptable levels.
- During impact pile driving, the marbled murrelet monitoring protocols will be run concurrently with the above described monitoring efforts.

3.6.2. Visual Survey Protocol – During Activity Monitoring

The shutdown and buffer zones will be monitored throughout the time required to install or remove a pile (including the soft start procedures[5]), or complete other in-water construction as

[5] The sequence of the soft-start procedures includes a minor deviation from those typically requested by the NMFS which utilize a longer waiting period (one minute vs. 30 seconds). The Navy requested to change the waiting period

defined in Section 3.4. If concurrent marbled murrelet monitoring reveals that marbled murrelets are present or have entered the shutdown zone for that species, impact pile driving will not start and surveys will continue until the marbled murrelets leave the shutdown zone voluntarily per the Marbled Murrelet Monitoring Plan. The following survey methodology will be implemented during pile driving/removal and other in-water construction activities:

- If a marine mammal is observed within or entering the buffer zone during pile driving/removal an exposure would be recorded and behaviors documented. However, that pile segment would be completed without cessation, unless the animal approaches or enters the shutdown (injury) zone, at which point all pile installation/removal activities associated with that rig and other in-water construction activities will be halted. The observers shall immediately radio to alert the monitoring coordinator/construction contractor and raise a red flag. This action will require an immediate "all-stop" on pile operations. Shutdown at one pile driving location may not necessarily trigger shutdowns at other locations where pile driving is occurring concurrently.
- However, under certain construction circumstances where initiating the shutdown and clearance procedures (which could include a delay of 15 min or more) would result in an imminent concern for human safety the shutdown provision may be waived (see Section 3.4 for additional details).
- Once a shutdown has been initiated, pile installation/removal activities at that rig and other in-water construction activities will be delayed until the animal has voluntarily left the shutdown zone and has been visually confirmed beyond the shutdown zone, or 15 minutes have passed without re-detection of the animal.
- During the in-water construction delay, surveys will continue to be conducted and pile driving and other in-water construction activities will not resume until the shutdown zone has been deemed clear of all marine mammals.
- Once marine mammals are no longer detected within the shutdown zone (i.e. the zone is deemed clear of marine mammals), the observers will raise a green flag and radio the monitoring coordinator/construction contractor that activities can re-commence;
- If marine mammals are detected outside the shutdown zone, the observers will continue to monitor these individuals and record their behavior, but pile driving and other in-water construction may proceed. Any marine mammals detected outside the shutdown zone after pile driving or other in-water construction activities are initiated shall likewise continue to be monitored and their behaviors recorded.
- Marine Mammal Observation Record forms (Appendix A) will be used to document observations.
- Any survey boats engaged in marine mammal monitoring will maintain speeds equal to or less than 10 knots.
- Observers will be trained and experienced marine mammal observers in order to accurately verify species sighted.

---

because observational data during the Test Pile Program and EHW-1 repairs indicated a one minute wait period may be too long. Longer breaks between the sounds may be interpreted by the animals as a transient sound, and may not serve the intended purpose to provide an indication that louder sounds are about to begin. The Navy consulted with NMFS regarding using a shorter waiting period (i.e. 30 seconds) and the Service found the Navy's reasoning to be valid and accepted the requested modification.

- Observers will use binoculars and the naked eye to search continuously for marine mammals.
- In case of fog or reduced visibility, the observers must be able to see the shutdown zones or pile driving/removal and in-water construction activities will not be initiated until visibility in these zones improves to acceptable levels.
- During impact pile driving the marbled murrelet monitoring protocols will be run concurrently with the above described monitoring efforts.

3.6.3. Visual Survey Protocol – Post-Activity Monitoring

Monitoring of the shutdown and buffer zones will continue for 30 minutes following completion of pile installation/ removal activities. A post-monitoring period is not required for other in-water construction. These surveys will record marine mammal observations, and will focus on observing and reporting unusual or abnormal behavior of marine mammals. Marine Mammal Observation Record forms (Appendix A) will be used to document observations. In general, the same protocols described in section 3.6.2 would apply. During these surveys, if any injured, sick, or dead marine mammals are observed procedures outlined in Section 4.0 should be following regarding notifying the appropriate authorities.

3.6.4. Acoustic Measurements

The Navy will conduct acoustic monitoring for impact and vibratory installation/removal activities associated with the EHW-2 project in order to determine the actual distances to the underwater and airborne thresholds for marine mammals. These include the 190 dB re 1μPa rms,180 dB re 1μPa rms,160 dB re 1μPa rms and 120 dB re 1μPa rms underwater isopleths, and the 100 dB re 20 μPa and 90 dB re 20 μPa unweighted airborne isopleths. The Navy may place additional hydrophones/microphones at other distances and depths as appropriate to accurately capture sound propagation characteristics at the project area. Ambient underwater and airborne conditions in the absence of pile driving activities may also be recorded for comparison. The Navy's Acoustic Monitoring Plan provides the specific details of the acoustic monitoring requirements and protocol for collecting both underwater and airborne sounds.

4.0 INTERAGENCY NOTIFICATION

The Navy anticipates that monitoring/shutdown zones may need to be modified as a result of acoustic data obtained during the monitoring period, and to reflect other conditions relating to construction activities and marine mammal species occurrence. In the event that the Navy needs to modify terms of this monitoring plan, the NMFS representative will be promptly contacted for discussion of the requested modification. In addition, if the Navy finds an injured, sick, or dead marine mammal, the Navy will notify NMFS immediately. All of these marine mammal sightings will be called into the NMFS Stranding Hotline (1-800-853-1964) unless the marine mammal's condition is a direct result of the project, in which case additional notification should be made to Brent Norberg (NMFS NW) at (206) 526-6550 and Ben Laws (NMFS HQ) (301) 427-8425. The Navy will provide NMFS with the species or description of the animal(s), the condition of the animal (including carcass condition if the animal is dead), location, the date and time of first discovery, observed behaviors (if alive), and photo or video (if available).

Care should be taken in handling dead specimens to preserve biological materials in the best possible state for later analysis of cause of death, if that occurs. In preservation of biological materials from a dead animal, the finder (i.e. marine mammal observer) has the responsibility to ensure that evidence associated with the specimen is not unnecessarily disturbed.

5.0 MONITORING REPORTS

Two reports documenting marine mammal observations will be submitted to NMFS during the first in-water work season: (1) The acoustics monitoring report will summarize marine mammal observations that occurred during the acoustic monitoring period [30 days from start of monitoring, or until the Navy is able to capture a representative acoustic sample of the major pile driving scenarios described under the modeled conditions (impact hammer and vibratory driving, smaller [24-in to 36-inch] and larger [48-inch] piles, plumb and batter piles)]; and (2) a comprehensive annual marine mammal monitoring report documenting marine mammal observations during the entire first in-water work window. For each subsequent year of construction only an annual marine mammal monitoring report will be submitted after the end of each in-water work period.

The acoustic monitoring report will summarize the acoustic results obtained during the acoustic monitoring period for each representative pile driving scenario, and if possible, will correlate marine mammal sightings and behavioral observations to potential acoustic received levels. The report will include an estimation of the number of potential takes which have occurred thus far for the project, any adverse responses to construction activities by marine mammals, and actions taken to solve these problems. The draft acoustic monitoring report will be submitted to NMFS within 90 calendar days following the end of the acoustic monitoring period. The final acoustic monitoring report will be prepared and submitted to NMFS within 30 calendar days following resolution of comments received from the resource agencies on the draft interim report.

The draft comprehensive marine mammal monitoring report will be submitted to NMFS within 90 calendar days of the end of each in-water work period. The report will include marine mammal observations pre-activity, during-activity, and post-activity during pile driving days. A final comprehensive report will be prepared and submitted to NMFS within 30 calendar days following resolution of comments on the draft report from NMFS.

The reports shall include at a minimum:

- General data:
  - Date and time of activity
  - Water conditions (e.g., sea-state, tidal state)
  - Weather conditions (e.g., percent cover, percent glare, visibility)
  - General information regarding the bottom substrate into which the piles are driven
- Specific pile driving data:
  - Description of the pile driving activity being conducted (pile locations, pile driving naming system, pile size and type), and times (onset and completion) when pile driving occurs.

        - The construction contractor and/or marine mammal monitoring staff will coordinate to ensure that pile driving times and strike counts are accurately recorded. The duration of soft start procedures (either vibratory or impact) should be noted as separate from the full power driving duration.
    - Description of in-water construction activity not involving pile driving (location, type of activity, onset and completion times)
    - Detailed description of the sound attenuation system, including design specifications. Details of any issues associated with bubble curtain deployment or any functional checks conducted on the system should be recorded on a daily or per pile basis.
    - Impact or vibratory hammer force used to drive/extract the piles
    - Summary of representative underwater and airborne acoustic measurements for the different size of piles (i.e. 24, 26, or 48 inch), installation/removal methods (impact or vibratory;), and pile positioning (i.e. batter versus plumb)

- Pre-activity observational survey-specific data:
    - Dates and time survey is initiated and terminated
    - Description of any observable marine mammals and their behavior in the immediate area during monitoring
    - Times when pile driving or other in-water construction is delayed due to presence of marine mammals within shutdown zones.

- During -activity observational survey-specific data:
    - Description of any observable marine mammal behavior within monitoring zones or in the immediate area surrounding the monitoring zones, including the following:
        - Distance from animal to pile driving sound source.
        - Reason why/why not shutdown implemented.
        - If a shutdown was implemented, behavioral reactions noted and if they occurred before or after implementation of the shutdown.
        - If a shutdown is implemented, the distance from animal to sound source at the time of the shutdown.
        - Behavioral reactions noted during soft starts and if they occurred before or after implementation of the soft start.
        - Distance to the animal from the sound source during soft start.

- Post-activity observational survey-specific data:
    - Results, which include the detections and behavioral reactions of marine mammals, the species and numbers observed, sighting rates and distances,
    - Refined exposure estimate based on the number of marine mammals observed. This may be reported as a rate of take (number of marine mammals per hour or per day), or using some other appropriate metric.

6.0 REFERENCES

Slater, M.C. 2009. Naval Base Kitsap, Bangor baseline underwater noise survey report. Prepared by Science Applications International Corporation, Bremerton, WA. Prepared for BAE Systems Applied Technologies, Inc., Rockville, MD.

Washington Department of Transportation (WSDOT). 2011. Biological assessment preparation for transportation projects Advanced training manual, version 02-2011. Washington State Department of Transportation, Olympia, WA.

APPENDIX B
All In-Water Noise-Producing Events during the Year 2 EHW-2 CMP

Appendix B
All In-Water Noise-Producing Events during the Year 2 EHW-2 CMP

Vibratory (V) construction event
Soft start impact (SSI) construction event
Impact (I) construction event

Date	Latitude	Longitude	Time Effort Initiated	Time Effort Completed	Event Code	Pile	Start Time	End Time	Const Type	Comments
7/16/2013	47.75189	122.72572	12:15	17:50	PRE		12:15:00	12:30:00	NONE	
7/16/2013	47.75189	122.72572	12:15	17:50	CON	Temp-1	14:00:32	14:03:47	V	Shakes to unstick from template
7/16/2013	47.75189	122.72572	12:15	17:50	CON	Temp-1	14:07:21	14:08:07	V	
7/16/2013	47.75189	122.72572	12:15	17:50	CON	Temp-1	14:08:53	14:09:02	V	
7/16/2013	47.75189	122.72572	12:15	17:50	CON	Temp-1	14:13:01	14:20:39	V	
7/16/2013	47.75189	122.72572	12:15	17:50	CON	Temp-2	15:35:18	15:42:49	V	
7/16/2013	47.75189	122.72572	12:15	17:50	CON	Temp-3	17:06:17	17:13:38	V	
7/16/2013	47.75189	122.72572	12:15	17:50	CON	Temp-4	17:16:29	17:20:50	V	
7/16/2013	47.75189	122.72572	12:15	17:50	POST		17:20:00	17:50:00	NONE	
7/17/2013	47.75189	122.72572	11:10	16:42	PRE		11:10:00	11:25:00	NONE	
7/17/2013	47.75189	122.72572	11:10	16:42	CON	B-24	12:57:34	13:03:47	V	Shakes to set hammer
7/17/2013	47.75189	122.72572	11:10	16:42	CON	B-24	13:24:15	13:24:37	V	48"
7/17/2013	47.75189	122.72572	11:10	16:42	CON	B-24	13:37:22	13:39:29	V	
7/17/2013	47.75189	122.72572	11:10	16:42	CON	B-24	14:01:05	14:02:11	V	
7/17/2013	47.75189	122.72572	11:10	16:42	CON	B-24	14:04:04	14:15:19	V	
7/17/2013	47.75189	122.72572	11:10	16:42	CON	Temp-1	15:56:05	15:58:54	V	Out
7/17/2013	47.75189	122.72572	11:10	16:42	CON	Temp-1	15:59:11	15:59:30	V	Out
7/17/2013	47.75189	122.72572	11:10	16:42	CON	Temp-1	16:00:28	16:00:48	V	Out
7/17/2013	47.75189	122.72572	11:10	16:42	CON	Temp-2	16:07:56	16:08:22	V	Out
7/17/2013	47.75189	122.72572	11:10	16:42	CON	Temp-2	16:08:53	16:11:22	V	Out
7/17/2013	47.75189	122.72572	11:10	16:42	POST		16:12:00	16:42:00	NONE	
7/18/2013	47.75189	122.72572	7:00	9:15	PRE		7:00:00	7:15:00	NONE	
7/18/2013	47.75189	122.72572	7:00	9:15	CON	Temp-3	7:26:03	7:27:42	V	Out
7/18/2013	47.75189	122.72572	7:00	9:15	CON	Temp-1	7:32:21	7:33:17	V	
7/18/2013	47.75189	122.72572	7:00	9:15	CON	Temp-1	7:34:09	7:34:30	V	Out
7/18/2013	47.75189	122.72572	7:00	9:15	CON	Temp-4	7:40:41	7:43:53	V	Out
7/18/2013	47.75189	122.72572	7:00	9:15	CON	Temp-4	7:44:18	7:44:53	V	Out
7/18/2013	47.75189	122.72572	7:00	9:15	CON	Temp-4	7:45:27	7:45:53	V	Out
7/18/2013	47.75189	122.72572	7:00	9:15	CON	Temp-4	7:46:46	7:47:11	V	Out
7/18/2013	47.75189	122.72572	7:00	9:15	POST		8:45:00	9:15:00	NONE	
7/19/2013	47.75187	122.72571	7:20	14:30	PRE		7:20:00	7:35:00	NONE	
7/19/2013	47.75187	122.72571	7:20	14:30	CON	Temp-1	9:21:41	9:22:04	V	

Date	Latitude	Longitude	Time Effort Initiated	Time Effort Completed	Event Code	Pile	Start Time	End Time	Const Type	Comments
7/19/2013	47.75187	122.72571	7:20	14:30	CON	Temp-1	9:22:41	9:23:05	V	
7/19/2013	47.75187	122.72571	7:20	14:30	CON	Temp-1	9:26:20	9:26:27	V	
7/19/2013	47.75187	122.72571	7:20	14:30	CON	Temp-1	9:29:14	9:32:58	V	
7/19/2013	47.75187	122.72571	7:20	14:30	CON	Temp-1	9:34:51	9:35:28	V	
7/19/2013	47.75187	122.72571	7:20	14:30	CON	Temp-2	10:19:34	10:20:22	V	
7/19/2013	47.75187	122.72571	7:20	14:30	CON	Temp-2	10:21:31	10:21:50	V	
7/19/2013	47.75187	122.72571	7:20	14:30	CON	Temp-2	10:30:29	10:31:33	V	
7/19/2013	47.75187	122.72571	7:20	14:30	CON	Temp-2	10:32:22	10:32:29	V	
7/19/2013	47.75187	122.72571	7:20	14:30	CON	Temp-3	11:10:04	11:13:37	V	
7/19/2013	47.75187	122.72571	7:20	14:30	CON	Temp-1	11:18:17	11:19:26	V	
7/19/2013	47.75187	122.72571	7:20	14:30	CON	Temp-1	11:30:22	11:33:35	V	
7/19/2013	47.75187	122.72571	7:20	14:30	CON	Temp-1	11:37:09	11:37:38	V	
7/19/2013	47.75187	122.72571	7:20	14:30	CON	Temp-1	11:41:07	11:41:32	V	
7/19/2013	47.75187	122.72571	7:20	14:30	CON	Temp-1	11:42:22	11:43:01	V	
7/19/2013	47.75187	122.72571	7:20	14:30	CON	Temp-1	11:43:33	11:49:30	V	
7/19/2013	47.75187	122.72571	7:20	14:30	CON	Temp-4	11:52:39	11:54:54	V	
7/19/2013	47.75187	122.72571	7:20	14:30	CON	Temp-4	11:58:30	11:59:03	V	
7/19/2013	47.75187	122.72571	7:20	14:30	CON	Temp-1	13:37:54	13:40:55	V	Out
7/19/2013	47.75187	122.72571	7:20	14:30	CON	Temp-1	13:43:13	13:46:48	V	
7/19/2013	47.75187	122.72571	7:20	14:30	CON	Temp-1	13:47:18	13:47:43	V	
7/19/2013	47.75187	122.72571	7:20	14:30	POST		14:00:00	14:30:00	NONE	
7/22/2013	47.75187	122.72571	9:00	17:00	PRE		9:00:00	9:15:00	NONE	
7/22/2013	47.75187	122.72571	9:00	17:00	CON	B-1	10:47:49	10:50:23	V	48"
7/22/2013	47.75187	122.72571	9:00	17:00	CON	B-1	11:03:07	11:06:01	V	
7/22/2013	47.75187	122.72571	9:00	17:00	CON	B-1	11:06:45	11:14:39	V	
7/23/2013	47.73988	122.71603	8:15	16:44	PRE		8:15:00	8:30:00	NONE	
7/23/2013	47.73988	122.71603	8:15	16:44	CON	S-44	10:36:57	10:37:31	V	36"
7/23/2013	47.73988	122.71603	8:15	16:44	CON	S-44	10:38:35	10:40:00	V	
7/23/2013	47.73988	122.71603	8:15	16:44	CON	S-44	10:41:04	10:42:09	V	
7/23/2013	47.73988	122.71603	8:15	16:44	CON	S-44	10:43:57	10:48:05	V	
7/23/2013	47.73988	122.71603	8:15	16:44	CON	S-44	10:49:55	10:52:11	V	
7/23/2013	47.74999	122.7256	8:15	14:44	CON	C-1	10:59:55	11:02:41	V	
7/23/2013	47.74999	122.7256	8:15	14:44	CON	C-1	11:12:46	11:20:48	V	
7/23/2013	47.73988	122.71603	8:15	16:44	CON	S-44	13:59:40	14:00:29	V	
7/23/2013	47.73988	122.71603	8:15	16:44	CON	S-44	14:04:41	14:07:15	V	
7/23/2013	47.73988	122.71603	8:15	16:44	CON	S-44	14:13:20	14:27:44	V	
7/23/2013	47.73988	122.71603	8:15	16:44	CON	S-44	14:30:52	14:42:43	V	
7/23/2013	47.73988	122.71603	8:15	16:44	CON	R.2-44	15:52:04	15:52:23	V	36"
7/23/2013	47.73988	122.71603	8:15	16:44	CON	R.2-44	15:53:08	15:56:26	V	
7/23/2013	47.73988	122.71603	8:15	16:44	CON	R.2-44	16:01:04	16:07:03	V	

Date	Latitude	Longitude	Time Effort Initiated	Time Effort Completed	Event Code	Pile	Start Time	End Time	Const Type	Comments
7/23/2013	47.73988	122.71603	8:15	16:44	CON	R.2-44	16:12:56	16:14:05	V	
7/23/2013	47.73988	122.71603	8:15	16:44	POST		16:14:00	16:44:00	NONE	
7/24/2013	47.73988	122.71603	8:50	16:38	PRE		8:50:00	9:05:00	NONE	
7/24/2013	47.73988	122.71603	8:50	16:38	CON	N-44	10:48:04	10:48:31	V	
7/24/2013	47.73988	122.71603	8:50	16:38	CON	N-44	10:54:56	10:55:50	V	
7/24/2013	47.73988	122.71603	8:50	16:38	CON	N-44	11:05:57	11:07:04	V	Out
7/24/2013			8:50	16:38	CON	Temp-1	11:32:18	11:34:23	V	Out
7/24/2013			8:50	16:38	CON	Temp-2	11:37:51	11:38:59	V	Out
7/24/2013			8:50	16:38	CON	Temp-3	11:42:01	11:43:27	V	Out
7/24/2013			8:50	16:38	CON	Temp-3	11:43:51	11:44:01	V	Out
7/24/2013	47.73988	122.71603	8:50	16:38	CON	N-44	11:46:58	11:48:42	V	
7/24/2013			8:50	16:38	CON	Temp-4	11:47:50	11:49:16	V	Out
7/24/2013	47.73988	122.71603	8:50	16:38	CON	N-44	11:49:21	11:58:50	V	
7/24/2013			8:50	16:38	CON	Temp-4	11:49:38	11:49:53	V	Out
7/24/2013			8:50	16:38	CON	Temp-4	11:50:09	11:50:21	V	Out
7/24/2013	47.73988	122.71603	8:50	16:38	CON	L-44	14:03:37	14:04:01	V	
7/24/2013	47.73988	122.71603	8:50	16:38	CON	L-44	14:05:05	14:13:54	V	
7/24/2013	47.73988	122.71603	8:50	16:38	CON	L-44	14:16:58	14:21:46	V	
7/24/2013	47.73988	122.71603	8:50	16:38	CON	L-44	14:28:15	14:29:01	V	
7/24/2013	47.73988	122.71603	8:50	16:38	CON	L-44	14:29:59	14:30:09	V	
7/24/2013	47.73988	122.71603	8:50	16:38	CON	L-44	14:31:00	14:31:11	V	
7/24/2013	47.73988	122.71603	8:50	16:38	CON	J-44	15:54:39	15:54:54	V	
7/24/2013	47.73988	122.71603	8:50	16:38	CON	J-44	15:56:01	15:56:22	V	
7/24/2013	47.73988	122.71603	8:50	16:38	CON	J-44	15:59:40	16:06:35	V	
7/24/2013	47.73988	122.71603	8:50	16:38	CON	J-44	16:07:10	16:08:00	V	
7/24/2013	47.73988	122.71603	8:50	16:38	POST		16:08:00	16:38:00	NONE	
7/25/2013	47.75308	122.72482	7:39	18:35	PRE		7:39:00	8:09:00	NONE	
7/25/2013	47.75142	122.72404	7:39	18:35	CON	Temp-1	9:01:15	9:01:39	V	Attemted to shake loose the template (failed)
7/25/2013	47.75142	122.72404	7:39	18:35	CON	Temp-2	9:07:03	9:07:51	V	Out
7/25/2013	47.75142	122.72404	7:39	18:35	CON	Temp-2	9:08:49	9:09:04	V	Out
7/25/2013	47.75142	122.72404	7:39	18:35	CON	Temp-1	9:12:07	9:12:58	V	Out
7/25/2013	47.75142	122.72404	7:39	18:35	CON	Temp-1	9:21:41	9:26:33	V	Driving it in 5m S of original position
7/25/2013	47.75142	122.72404	7:39	18:35	CON	Temp-1	9:27:06	9:29:39	V	Drive
7/25/2013	47.75142	122.72404	7:39	18:35	CON	Temp-2	10:00:04	10:00:14	V	Drive
7/25/2013	47.75142	122.72404	7:39	18:35	CON	Temp-3	10:06:45	10:08:19	V	Out
7/25/2013	47.75142	122.72404	7:39	18:35	CON	Temp-3	10:14:23	10:20:21	V	Drive
7/25/2013	47.75308	122.72482	7:39	18:35	CON	S-44	10:16:27	10:16:32	SSI	
7/25/2013	47.75308	122.72482	7:39	18:35	CON	S-44	10:17:52	10:17:54	SSI	
7/25/2013	47.75308	122.72482	7:39	18:35	CON	S-44	10:19:04	10:19:05	SSI	

Date	Latitude	Longitude	Time Effort Initiated	Time Effort Completed	Event Code	Pile	Start Time	End Time	Const Type	Comments
7/25/2013	47.75308	122.72482	7:39	18:35	CON	S-44	10:20:18	10:20:19	I	
7/25/2013	47.75308	122.72482	7:39	18:35	CON	S-44	10:21:28	10:21:30	I	
7/25/2013	47.75308	122.72482	7:39	18:35	CON	S-44	10:22:39	10:22:40	I	
7/25/2013	47.75308	122.72482	7:39	18:35	CON	S-44	10:23:42	10:23:43	I	
7/25/2013	47.75142	122.72404	7:39	18:35	CON	Temp-3	10:23:58	10:24:44	V	Drive
7/25/2013	47.75308	122.72482	7:39	18:35	CON	S-44	10:24:47	10:24:49	I	
7/25/2013	47.75142	122.72404	7:39	18:35	MD	Temp-3	10:25:08	10:25:14	NONE	Delayed the start of vibe for TT-3. Started after HSEA clear. Observed HSEA swim Out of the shutdown zone.
7/25/2013	47.75308	122.72482	7:39	18:35	CON	S-44	10:25:44	10:25:46	I	
7/25/2013	47.75308	122.72482	7:39	18:35	CON	S-44	10:26:45	10:26:46	I	
7/25/2013	47.75308	122.72482	7:39	18:35	CON	S-44	10:27:48	10:27:50	I	
7/25/2013	47.75308	122.72482	7:39	18:35	CON	S-44	10:28:47	10:28:49	I	
7/25/2013	47.75308	122.72482	7:39	18:35	CON	S-44	10:29:50	10:29:55	I	
7/25/2013	47.75308	122.72482	7:39	18:35	CON	S-44	10:30:48	10:30:50	I	
7/25/2013	47.75308	122.72482	7:39	18:35	CON	S-44	10:31:45	10:31:48	I	
7/25/2013	47.75142	122.72404	7:39	18:35	CON	Temp-4	10:32:17	10:34:04	V	Out
7/25/2013	47.75308	122.72482	7:39	18:35	CON	S-44	10:32:44	10:32:46	I	
7/25/2013	47.75308	122.72482	7:39	18:35	CON	S-44	10:33:40	10:33:42	I	
7/25/2013	47.75308	122.72482	7:39	18:35	CON	S-44	10:34:39	10:34:43	I	
7/25/2013	47.75308	122.72482	7:39	18:35	CON	S-44	10:35:42	10:35:43	I	
7/25/2013	47.75308	122.72482	7:39	18:35	CON	S-44	10:36:40	10:36:42	I	
7/25/2013	47.75308	122.72482	7:39	18:35	CON	S-44	10:37:38	10:37:40	I	
7/25/2013	47.75308	122.72482	7:39	18:35	CON	S-44	10:38:35	10:38:36	I	
7/25/2013	47.75308	122.72482	7:39	18:35	CON	S-44	10:39:33	10:39:35	I	
7/25/2013	47.75308	122.72482	7:39	18:35	CON	S-44	10:40:29	10:40:32	I	
7/25/2013	47.75308	122.72482	7:39	18:35	CON	S-44	10:41:30	10:41:33	I	
7/25/2013	47.75308	122.72482	7:39	18:35	CON	S-44	10:42:31	10:42:35	I	
7/25/2013	47.75308	122.72482	7:39	18:35	CON	S-44	10:43:28	10:43:31	I	
7/25/2013	47.75308	122.72482	7:39	18:35	CON	S-44	10:44:27	10:44:29	I	
7/25/2013	47.75308	122.72482	7:39	18:35	CON	S-44	10:45:26	10:45:28	I	
7/25/2013	47.75308	122.72482	7:39	18:35	CON	S-44	10:46:20	10:46:23	I	
7/25/2013	47.75308	122.72482	7:39	18:35	CON	S-44	10:47:19	10:47:21	I	
7/25/2013	47.75308	122.72482	7:39	18:35	CON	S-44	10:48:15	10:48:16	I	
7/25/2013	47.75308	122.72482	7:39	18:35	CON	S-44	10:49:11	10:49:13	I	
7/25/2013	47.75308	122.72482	7:39	18:35	CON	S-44	10:50:07	10:50:10	I	
7/25/2013	47.75142	122.72404	7:39	18:35	CON	Temp-4	10:56:11	11:01:06	V	Drive
7/25/2013	47.75142	122.72404	7:39	18:35	CON	Temp-4	11:02:19	11:03:50	V	Drive
7/25/2013	47.75308	122.72482	7:39	18:35	CON	S-44	11:13:28	11:13:33	I	
7/25/2013	47.75308	122.72482	7:39	18:35	CON	S-44	11:15:19	11:15:20	I	

Date	Latitude	Longitude	Time Effort Initiated	Time Effort Completed	Event Code	Pile	Start Time	End Time	Const Type	Comments
7/25/2013	47.75308	122.72482	7:39	18:35	CON	S-44	11:20:15	11:20:16	I	
7/25/2013	47.75308	122.72482	7:39	18:35	CON	S-44	11:25:53	11:25:54	I	
7/25/2013	47.75142	122.72404	7:39	18:35	CON	Temp-3	11:27:03	11:28:05	V	Drive
7/25/2013	47.75308	122.72482	7:39	18:35	CON	S-44	11:28:23	11:28:26	I	
7/25/2013	47.75142	122.72404	7:39	18:35	CON	Temp-3	11:28:40	11:28:48	V	Drive
7/25/2013	47.75142	122.72404	7:39	18:35	CON	Temp-1	11:40:43	11:41:17	V	Out
7/25/2013	47.75308	122.72482	7:39	18:35	CON	S-44	11:41:30	11:41:35	I	
7/25/2013	47.75142	122.72404	7:39	18:35	CON	Temp-2	12:57:05	12:57:35	V	Out
7/25/2013	47.75142	122.72404	7:39	18:35	CON	Temp-2	13:03:22	13:04:29	V	Drive
7/25/2013	47.75142	122.72404	7:39	18:35	CON	Temp-2	13:05:00	13:05:45	V	Drive
7/25/2013	47.75142	122.72404	7:39	18:35	CON	Temp-4	13:14:22	13:15:06	V	Out
7/25/2013	47.75142	122.72404	7:39	18:35	CON	Temp-4	13:24:16	13:27:38	V	Drive
7/25/2013	47.75308	122.72482	7:39	18:35	CON	S-44	14:19:18	14:19:20	SSI	
7/25/2013	47.75308	122.72482	7:39	18:35	CON	S-44	14:20:11	14:20:13	SSI	
7/25/2013	47.75308	122.72482	7:39	18:35	CON	S-44	14:21:12	14:21:15	SSI	
7/25/2013	47.75308	122.72482	7:39	18:35	CON	S-44	14:22:14	14:22:16	I	
7/25/2013	47.75308	122.72482	7:39	18:35	CON	S-44	14:23:16	14:23:17	I	
7/25/2013	47.75308	122.72482	7:39	18:35	CON	S-44	14:24:17	14:24:20	I	
7/25/2013	47.75308	122.72482	7:39	18:35	CON	S-44	14:25:17	14:25:18	I	
7/25/2013	47.75308	122.72482	7:39	18:35	CON	S-44	14:26:17	14:26:21	I	
7/25/2013	47.75308	122.72482	7:39	18:35	CON	S-44	14:27:20	14:27:24	I	
7/25/2013	47.75308	122.72482	7:39	18:35	CON	S-44	14:28:23	14:28:26	I	
7/25/2013	47.75308	122.72482	7:39	18:35	CON	S-44	14:29:27	14:29:29	I	
7/25/2013	47.75308	122.72482	7:39	18:35	CON	S-44	14:30:27	14:30:29	I	
7/25/2013	47.75308	122.72482	7:39	18:35	CON	S-44	14:31:27	14:31:29	I	
7/25/2013	47.75308	122.72482	7:39	18:35	CON	S-44	14:32:29	14:32:33	I	
7/25/2013	47.75308	122.72482	7:39	18:35	CON	S-44	14:33:30	14:33:34	I	
7/25/2013	47.75308	122.72482	7:39	18:35	CON	S-44	14:34:36	14:34:39	I	
7/25/2013	47.75308	122.72482	7:39	18:35	CON	S-44	14:35:35	14:35:39	I	
7/25/2013	47.75308	122.72482	7:39	18:35	CON	S-44	14:36:38	14:36:41	I	
7/25/2013	47.75308	122.72482	7:39	18:35	CON	S-44	14:37:42	14:37:45	I	
7/25/2013	47.75308	122.72482	7:39	18:35	CON	S-44	14:38:45	14:38:48	I	
7/25/2013	47.75308	122.72482	7:39	18:35	CON	S-44	14:39:46	14:39:50	I	
7/25/2013	47.75308	122.72482	7:39	18:35	CON	S-44	14:40:50	14:40:53	I	
7/25/2013	47.75308	122.72482	7:39	18:35	CON	S-44	14:41:52	14:41:55	I	
7/25/2013	47.75308	122.72482	7:39	18:35	CON	S-44	14:42:54	14:42:56	I	
7/25/2013	47.75308	122.72482	7:39	18:35	CON	S-44	14:43:55	14:43:57	I	
7/25/2013	47.75308	122.72482	7:39	18:35	CON	S-44	14:44:56	14:44:58	I	
7/25/2013	47.75308	122.72482	7:39	18:35	CON	S-44	14:45:57	14:46:00	I	
7/25/2013	47.75308	122.72482	7:39	18:35	CON	S-44	14:46:58	14:47:00	I	

Date	Latitude	Longitude	Time Effort Initiated	Time Effort Completed	Event Code	Pile	Start Time	End Time	Const Type	Comments
7/25/2013	47.75308	122.72482	7:39	18:35	CON	S-44	14:47:59	14:48:01	I	
7/25/2013	47.75308	122.72482	7:39	18:35	CON	S-44	14:49:01	14:49:04	I	
7/25/2013	47.75308	122.72482	7:39	18:35	CON	S-44	14:50:04	14:50:05	I	
7/25/2013	47.75308	122.72482	7:39	18:35	CON	S-44	14:51:05	14:51:08	I	
7/25/2013	47.75308	122.72482	7:39	18:35	CON	S-44	14:52:11	14:52:13	I	
7/25/2013	47.75308	122.72482	7:39	18:35	CON	S-44	14:53:05	14:53:08	I	
7/25/2013	47.75308	122.72482	7:39	18:35	CON	S-44	14:54:05	14:54:08	I	
7/25/2013	47.75308	122.72482	7:39	18:35	CON	S-44	14:55:07	14:55:10	I	
7/25/2013	47.75308	122.72482	7:39	18:35	CON	S-44	14:56:09	14:56:12	I	
7/25/2013	47.75308	122.72482	7:39	18:35	CON	S-44	14:57:10	14:57:12	I	
7/25/2013	47.75308	122.72482	7:39	18:35	CON	S-44	14:58:12	14:58:16	I	
7/25/2013	47.75308	122.72482	7:39	18:35	CON	S-44	14:59:17	14:59:20	I	
7/25/2013	47.75308	122.72482	7:39	18:35	CON	R.2-44	16:25:27	16:25:31	SSI	
7/25/2013	47.75308	122.72482	7:39	18:35	CON	R.2-44	16:26:28	16:26:30	SSI	
7/25/2013	47.75308	122.72482	7:39	18:35	CON	R.2-44	16:27:25	16:27:26	SSI	
7/25/2013	47.75308	122.72482	7:39	18:35	CON	R.2-44	16:28:24	16:28:25	I	
7/25/2013	47.75308	122.72482	7:39	18:35	CON	R.2-44	16:29:20	16:29:21	I	
7/25/2013	47.75308	122.72482	7:39	18:35	CON	R.2-44	16:30:16	16:30:17	I	
7/25/2013	47.75308	122.72482	7:39	18:35	CON	R.2-44	16:31:14	16:31:16	I	
7/25/2013	47.75308	122.72482	7:39	18:35	CON	R.2-44	16:33:09	16:33:12	I	
7/25/2013	47.75308	122.72482	7:39	18:35	CON	R.2-44	16:34:08	16:34:10	I	
7/25/2013	47.75308	122.72482	7:39	18:35	CON	R.2-44	16:35:08	16:35:10	I	
7/25/2013	47.75308	122.72482	7:39	18:35	CON	R.2-44	17:47:10	17:47:11	SSI	
7/25/2013	47.75308	122.72482	7:39	18:35	CON	R.2-44	17:48:06	17:48:08	SSI	
7/25/2013	47.75308	122.72482	7:39	18:35	CON	R.2-44	17:49:06	17:49:07	SSI	
7/25/2013	47.75308	122.72482	7:39	18:35	CON	R.2-44	17:50:10	17:50:16	I	
7/25/2013	47.75308	122.72482	7:39	18:35	CON	R.2-44	17:51:16	17:51:21	I	
7/25/2013	47.75308	122.72482	7:39	18:35	CON	R.2-44	17:52:19	17:52:21	I	
7/25/2013	47.75308	122.72482	7:39	18:35	CON	R.2-44	17:53:21	17:53:23	I	
7/25/2013	47.75308	122.72482	7:39	18:35	CON	R.2-44	17:54:19	17:54:22	I	
7/25/2013	47.75308	122.72482	7:39	18:35	CON	R.2-44	17:55:21	17:55:23	I	
7/25/2013	47.75308	122.72482	7:39	18:35	CON	R.2-44	17:56:20	17:56:21	I	
7/25/2013	47.75308	122.72482	7:39	18:35	CON	R.2-44	17:57:21	17:57:24	I	
7/25/2013	47.75308	122.72482	7:39	18:35	CON	R.2-44	17:58:23	17:58:25	I	
7/25/2013	47.75308	122.72482	7:39	18:35	CON	R.2-44	17:59:22	18:00:28	I	
7/25/2013	47.75308	122.72482	7:39	18:35	CON	R.2-44	18:01:57	18:02:20	I	
7/25/2013	47.75308	122.72482	7:39	18:35	CON	R.2-44	18:04:59	18:05:36	I	
7/25/2013	47.75308	122.72482	7:39	18:35	POST		18:05:00	18:35:00	NONE	
7/26/2013	47.75308	122.72482	7:35	17:28	PRE		7:35:00	8:05:00	NONE	
7/26/2013	47.75308	122.72482	7:35	17:28	CON	S-44	8:05:57	8:05:59	SSI	

Date	Latitude	Longitude	Time Effort Initiated	Time Effort Completed	Event Code	Pile	Start Time	End Time	Const Type	Comments
7/26/2013	47.75308	122.72482	7:35	17:28	CON	S-44	8:07:13	8:07:15	SSI	
7/26/2013	47.75308	122.72482	7:35	17:28	CON	S-44	8:08:18	8:08:20	SSI	
7/26/2013	47.75308	122.72482	7:35	17:28	CON	S-44	8:09:21	8:09:23	I	
7/26/2013	47.75308	122.72482	7:35	17:28	CON	S-44	8:10:27	8:10:28	I	
7/26/2013	47.75308	122.72482	7:35	17:28	CON	S-44	8:11:32	8:11:33	I	
7/26/2013	47.75308	122.72482	7:35	17:28	CON	S-44	8:12:40	8:28:55	I	
7/26/2013	47.75308	122.72482	7:35	17:28	CON	R.2-44	9:14:41	9:14:45	SSI	
7/26/2013	47.75308	122.72482	7:35	17:28	CON	R.2-44	9:16:01	9:16:03	SSI	
7/26/2013	47.75308	122.72482	7:35	17:28	CON	R.2-44	9:17:11	9:17:14	SSI	
7/26/2013	47.75308	122.72482	7:35	17:28	CON	R.2-44	9:18:32	9:19:14	I	
7/26/2013	47.75308	122.72482	7:35	17:28	CON	R.2-44	9:21:45	9:39:49	I	
7/26/2013	47.75308	122.72482	7:35	17:28	CON	N-44	10:23:00	10:23:02	SSI	
7/26/2013	47.75308	122.72482	7:35	17:28	CON	N-44	10:24:09	10:24:11	SSI	
7/26/2013	47.75308	122.72482	7:35	17:28	CON	N-44	10:25:12	10:25:15	SSI	
7/26/2013	47.75308	122.72482	7:35	17:28	CON	N-44	10:26:20	10:44:07	I	
7/26/2013	47.75308	122.72482	7:35	17:28	CON	N-44	10:49:36	10:53:16	I	
7/26/2013	47.75308	122.72482	7:35	17:28	CON	J-44	11:13:50	11:21:46	I	
7/26/2013	47.75308	122.72482	7:35	17:28	CON	J-44	11:23:45	11:23:50	I	
7/26/2013	47.75308	122.72482	7:35	17:28	CON	V.1-43	14:08:30	14:10:18	V	
7/26/2013	47.75308	122.72482	7:35	17:28	CON	V.1-43	14:11:28	14:19:54	V	
7/26/2013			7:35	17:28	CON	B-24	15:26:38	15:26:43	SSI	48"
7/26/2013			7:35	17:28	CON	B-24	15:26:38	15:26:43	SSI	48"
7/26/2013			7:35	17:28	CON	B-24	15:27:34	15:27:36	SSI	
7/26/2013			7:35	17:28	CON	B-24	15:27:34	15:27:36	SSI	
7/26/2013			7:35	17:28	CON	B-24	15:28:26	15:28:29	SSI	
7/26/2013			7:35	17:28	CON	B-24	15:28:26	15:28:29	SSI	
7/26/2013	47.75308	122.72482	7:35	17:28	CON	T.5-43	15:29:14	15:31:29	V	
7/26/2013			7:35	17:28	CON	B-24	15:29:14	15:33:02	I	
7/26/2013			7:35	17:28	CON	B-24	15:29:14	15:33:02	I	
7/26/2013	47.75308	122.72482	7:35	17:28	CON	T.5-43	15:33:21	15:39:10	V	
7/26/2013			7:35	17:28	CON	B-24	15:57:15	16:00:17	I	
7/26/2013			7:35	17:28	CON	B-24	15:57:15	16:00:17	I	
7/26/2013			7:35	17:28	CON	B-24	16:02:08	16:02:10	I	
7/26/2013			7:35	17:28	CON	B-24	16:02:08	16:02:10	I	
7/26/2013			7:35	17:28	CON	B-24	16:28:42	16:33:56	I	
7/26/2013			7:35	17:28	CON	B-24	16:28:42	16:33:56	I	
7/26/2013	47.75308	122.72482	7:35	17:28	CON	S-43	16:42:24	16:44:51	V	
7/26/2013	47.75308	122.72482	7:35	17:28	CON	S-43	16:45:22	16:50:58	V	
7/26/2013	47.75308	122.72482	7:35	17:28	CON	S-43	16:56:44	16:57:13	V	
7/26/2013	47.75308	122.72482	7:35	17:28	POST		16:58:00	17:28:00	NONE	

Date	Latitude	Longitude	Time Effort Initiated	Time Effort Completed	Event Code	Pile	Start Time	End Time	Const Type	Comments
7/27/2013	47.75308	122.72482	7:40	16:05	PRE		7:40:00	7:56:49	NONE	
7/27/2013	47.75308	122.72482	7:40	16:49	PRE		7:40:00	7:55:00	NONE	
7/27/2013	47.75308	122.72482	7:40	16:49	CON	R.2-43	9:01:47	9:02:24	V	
7/27/2013	47.75308	122.72482	7:40	16:49	CON	R.2-43	9:02:55	9:06:09	V	
7/27/2013	47.75308	122.72482	7:40	16:49	CON	R.2-43	9:07:16	9:10:38	V	
7/27/2013	47.75308	122.72482	7:40	16:49	CON	N-43	11:44:43	11:45:18	V	
7/27/2013	47.75308	122.72482	7:40	16:49	CON	N-43	11:47:24	11:51:50	V	
7/27/2013	47.75308	122.72482	7:40	16:49	CON	N-43	11:59:01	12:00:57	V	
7/27/2013	47.75308	122.72482	7:40	16:49	CON	N-43	12:04:11	12:06:02	V	
7/27/2013	47.75308	122.72482	7:40	16:05	PRE		12:36:53	12:51:53	NONE	started mamu sweeps
7/27/2013	47.75308	122.72482	7:40	16:05	CON	B-1	13:23:26	13:23:28	SSI	
7/27/2013	47.75308	122.72482	7:40	16:05	CON	B-1	13:24:20	13:24:21	SSI	
7/27/2013	47.75308	122.72482	7:40	16:05	CON	B-1	13:25:13	13:25:15	SSI	
7/27/2013	47.75308	122.72482	7:40	16:05	CON	B-1	13:26:05	13:58:36	I	
7/27/2013	47.75308	122.72482	7:40	16:49	CON	L-43	13:43:06	13:44:01	V	
7/27/2013	47.75308	122.72482	7:40	16:49	CON	L-43	13:46:49	13:49:43	V	
7/27/2013	47.75308	122.72482	7:40	16:49	CON	L-43	13:51:24	13:52:53	V	
7/27/2013	47.75308	122.72482	7:40	16:49	CON	L-43	13:54:32	14:03:39	V	
7/27/2013	47.75308	122.72482	7:40	16:49	CON	L-43	14:09:23	14:19:07	V	
7/27/2013	47.75308	122.72482	7:40	16:05	CON	C-1	15:04:15	15:04:17	SSI	
7/27/2013	47.75308	122.72482	7:40	16:05	CON	C-1	15:05:16	15:05:18	SSI	
7/27/2013	47.75308	122.72482	7:40	16:05	CON	C-1	15:06:10	15:06:11	SSI	
7/27/2013	47.75308	122.72482	7:40	16:05	CON	C-1	15:07:02	15:28:49	I	
7/27/2013	47.75308	122.72482	7:40	16:05	CON	C-1	15:31:27	15:34:21	I	
7/27/2013	47.75308	122.72482	7:40	16:05	POST		15:35:00	16:05:00	NONE	
7/27/2013	47.75308	122.72482	7:40	16:49	CON	J-43	16:04:08	16:08:03	V	
7/27/2013	47.75308	122.72482	7:40	16:49	CON	J-43	16:09:46	16:12:00	V	
7/27/2013	47.75308	122.72482	7:40	16:49	POST		16:19:00	16:49:00	NONE	
7/29/2013	47.75308	122.72482	8:30	17:00	PRE		8:30:00	9:00:00	NONE	
7/29/2013	47.75308	122.72482	8:30	17:00	CON	X.8-42	10:00:55	10:01:31	V	36"
7/29/2013	47.75308	122.72482	8:30	17:00	CON	X.8-42	10:03:31	10:06:56	V	
7/29/2013	47.75308	122.72482	8:30	17:00	CON	X.8-42	10:08:53	10:11:39	V	
7/29/2013	47.75308	122.72482	8:30	17:00	CON	B-1	10:10:01	10:10:06	SSI	48" Restrike
7/29/2013	47.75308	122.72482	8:30	17:00	CON	B-1	10:10:59	10:11:01	SSI	
7/29/2013	47.75308	122.72482	8:30	17:00	CON	B-1	10:11:53	10:11:56	SSI	
7/29/2013	47.75308	122.72482	8:30	17:00	CON	B-1	10:12:44	10:14:16	I	
7/29/2013	47.75308	122.72482	8:30	17:00	CON	X.8-42	10:12:44	10:13:37	V	
7/29/2013	47.75308	122.72482	8:30	17:00	CON	W-42	10:57:44	10:58:13	V	36"
7/29/2013	47.75308	122.72482	8:30	17:00	CON	W-42	10:59:55	11:05:53	V	
7/29/2013	47.75308	122.72482	8:30	17:00	CON	C-1	11:14:35	11:14:38	SSI	36"

Date	Latitude	Longitude	Time Effort Initiated	Time Effort Completed	Event Code	Pile	Start Time	End Time	Const Type	Comments
7/29/2013	47.75308	122.72482	8:30	17:00	CON	C-1	11:15:30	11:15:33	SSI	
7/29/2013	47.75308	122.72482	8:30	17:00	CON	C-1	11:16:23	11:16:26	SSI	
7/29/2013	47.75308	122.72482	8:30	17:00	CON	C-1	11:17:16	11:18:38	I	
7/29/2013	47.75308	122.72482	8:30	17:00	CON	T.8-42	13:00:28	13:00:49	V	36"
7/29/2013	47.75308	122.72482	8:30	17:00	CON	T.8-42	13:03:48	13:04:15	V	
7/29/2013	47.75308	122.72482	8:30	17:00	CON	T.8-42	13:08:21	13:14:41	V	
7/29/2013	47.75308	122.72482	8:30	17:00	CON	T.1-42	13:56:44	13:57:07	V	36"
7/29/2013	47.75308	122.72482	8:30	17:00	CON	T.1-42	13:58:17	13:59:02	V	
7/29/2013	47.75308	122.72482	8:30	17:00	CON	T.1-42	14:03:31	14:04:38	V	
7/29/2013	47.75308	122.72482	8:30	17:00	CON	T.1-42	14:25:56	14:26:29	V	
7/29/2013	47.75308	122.72482	8:30	17:00	CON	T.1-42	14:34:50	14:37:57	V	
7/29/2013	47.75308	122.72482	8:30	17:00	CON	T.1-42	14:41:19	14:42:03	V	
7/29/2013	47.75308	122.72482	8:30	17:00	CON	T.1-42	14:44:40	14:46:29	V	
7/29/2013	47.75308	122.72482	8:30	17:00	CON	T.1-42	14:58:24	14:59:05	V	
7/29/2013	47.75308	122.72482	8:30	17:00	CON	T.1-42	15:01:55	15:06:18	V	
7/29/2013	47.75308	122.72482	8:30	17:00	CON	T.1-42	15:13:14	15:17:36	V	
7/29/2013	47.75308	122.72482	8:30	17:00	CON	J-43	16:27:05	16:27:09	SSI	
7/29/2013	47.75308	122.72482	8:30	17:00	CON	J-43	16:28:19	16:28:22	SSI	
7/29/2013	47.75308	122.72482	8:30	17:00	CON	J-43	16:29:12	16:29:15	SSI	
7/29/2013	47.75308	122.72482	8:30	17:00	POST		16:30:00	17:00:00	NONE	
7/29/2013	47.75308	122.72482	8:30	17:00	CON	J-43	16:30:09	16:30:16	I	
7/30/2013	47.75308	122.72482	9:00	17:14	PRE		9:00:00	9:15:00	NONE	
7/30/2013	47.75308	122.72482	9:00	17:14	CON	R.4-42	9:53:49	9:54:18	V	
7/30/2013	47.75308	122.72482	9:00	17:14	CON	R.4-42	9:57:21	10:02:09	V	
7/30/2013	47.75308	122.72482	9:00	17:14	CON	R.4-42	10:03:52	10:05:10	V	
7/30/2013	47.75308	122.72482	9:00	17:14	CON	N-42	11:24:50	11:25:12	V	
7/30/2013	47.75308	122.72482	9:00	17:14	CON	N-42	11:26:03	11:29:54	V	
7/30/2013	47.75308	122.72482	9:00	17:14	CON	N-42	11:30:36	11:31:18	V	
7/30/2013	47.75308	122.72482	9:00	17:14	CON	L-42	13:03:40	13:04:10	V	
7/30/2013	47.75308	122.72482	9:00	17:14	CON	L-42	13:06:26	13:10:36	V	
7/30/2013	47.75308	122.72482	9:00	17:14	CON	L-42	13:11:12	13:23:20	V	
7/30/2013	47.75308	122.72482	9:00	17:14	CON	L-42	13:42:22	13:43:26	V	
7/30/2013	47.75308	122.72482	9:00	17:14	CON	J-42	14:34:09	14:34:53	V	
7/30/2013	47.75308	122.72482	9:00	17:14	CON	J-42	14:35:15	14:40:33	V	
7/30/2013	47.75308	122.72482	9:00	17:14	CON	X.8-41	16:26:44	16:33:05	V	
7/30/2013	47.75308	122.72482	9:00	17:14	CON	X.8-41	16:39:35	16:40:04	V	
7/30/2013	47.75308	122.72482	9:00	17:14	CON	X.8-41	16:41:16	16:43:24	V	
7/30/2013	47.75308	122.72482	9:00	17:14	POST		16:44:00	17:14:00	NONE	
7/31/2013	47.75308	122.72482	8:05	17:26	PRE		8:05:00	8:20:00	NONE	
7/31/2013	47.75308	122.72482	8:05	17:26	CON	W-41	8:44:58	8:46:47	V	

Date	Latitude	Longitude	Time Effort Initiated	Time Effort Completed	Event Code	Pile	Start Time	End Time	Const Type	Comments
7/31/2013	47.75308	122.72482	8:05	17:26	CON	W-41	8:49:14	8:51:02	V	
7/31/2013	47.75308	122.72482	8:05	17:26	CON	W-41	8:53:09	8:57:45	V	
7/31/2013	47.75308	122.72482	8:05	17:26	CON	W-41	9:00:44	9:03:56	V	
7/31/2013	47.75308	122.72482	8:05	17:26	CON	T.8-41	11:13:51	11:14:24	V	
7/31/2013	47.75308	122.72482	8:05	17:26	CON	T.8-41	11:19:15	11:20:21	V	
7/31/2013	47.75308	122.72482	8:05	17:26	CON	T.8-41	11:25:59	11:29:01	V	Out
7/31/2013	47.75308	122.72482	8:05	17:26	CON	T.8-41	11:37:14	11:38:03	V	
7/31/2013	47.75308	122.72482	8:05	17:26	CON	T.8-41	11:39:09	11:41:57	V	
7/31/2013	47.75308	122.72482	8:05	17:26	CON	T.8-41	11:43:29	11:47:25	V	
7/31/2013	47.75308	122.72482	8:05	17:26	CON	T.1-41	13:20:30	13:21:11	V	
7/31/2013	47.75308	122.72482	8:05	17:26	CON	T.1-41	13:22:34	13:30:00	V	
7/31/2013	47.75308	122.72482	8:05	17:26	MD	R.4-41	14:11:27	14:14:37	NONE	3 minutes until resight outside of zone
7/31/2013	47.75308	122.72482	8:05	17:26	CON	R.4-41	14:14:46	14:23:20	V	
7/31/2013	47.75308	122.72482	8:05	17:26	CON	N-41	15:11:19	15:16:54	V	
7/31/2013	47.75308	122.72482	8:05	17:26	CON	L-41	15:59:57	16:01:20	V	
7/31/2013	47.75308	122.72482	8:05	17:26	CON	L-41	16:01:54	16:08:51	V	
7/31/2013	47.75308	122.72482	8:05	17:26	CON	J-41	16:47:31	16:55:14	V	
7/31/2013	47.75308	122.72482	8:05	17:26	POST		16:56:00	17:26:00	NONE	
8/1/2013	47.75298	122.72502	7:41	17:22	PRE		7:41:00	7:56:00	NONE	
8/1/2013	47.75298	122.72502	7:41	17:22	CON	J-43	8:33:18	8:33:22	SSI	
8/1/2013	47.75298	122.72502	7:41	17:22	CON	J-43	8:40:14	8:40:15	SSI	
8/1/2013	47.75298	122.72502	7:41	17:22	CON	J-43	8:41:05	8:41:07	SSI	
8/1/2013	47.75298	122.72502	7:41	17:22	CON	J-43	8:41:55	8:41:57	SSI	
8/1/2013	47.75298	122.72502	7:41	17:22	CON	J-43	8:42:48	8:53:36	I	
8/1/2013	47.75298	122.72502	7:41	17:22	CON	J-43	8:54:40	8:57:02	I	
8/1/2013	47.75259	122.72392	7:41	18:06	CON	X.8-40	9:13:41	9:17:32	V	36"
8/1/2013	47.75298	122.72502	7:41	17:22	CON	L-43	9:19:24	9:24:53	I	
8/1/2013	47.75259	122.72392	7:41	18:06	CON	X.8-40	9:23:18	9:23:49	V	
8/1/2013	47.75298	122.72502	7:41	17:22	CON	L-43	9:26:07	9:26:35	I	
8/1/2013	47.75259	122.72392	7:41	18:06	CON	X.8-40	9:26:14	9:27:21	V	
8/1/2013	47.75298	122.72502	7:41	17:22	CON	L-43	9:27:55	9:28:06	I	
8/1/2013	47.75298	122.72502	7:41	17:22	CON	N-43	9:49:09	10:08:00	I	
8/1/2013	47.75298	122.72502	7:41	17:22	CON	N-43	10:09:39	10:09:52	I	
8/1/2013	47.75259	122.72392	7:41	18:06	CON	W-40	10:21:37	10:22:23	V	
8/1/2013	47.75259	122.72392	7:41	18:06	CON	W-40	10:22:46	10:24:02	V	
8/1/2013	47.75259	122.72392	7:41	18:06	CON	W-40	10:25:41	10:28:15	V	
8/1/2013	47.75298	122.72502	7:41	17:22	CON	R.2-43	10:27:35	10:28:20	I	
8/1/2013	47.75259	122.72392	7:41	18:06	CON	W-40	10:29:18	10:31:18	V	
8/1/2013	47.75298	122.72502	7:41	17:22	CON	R.2-43	10:30:31	10:32:56	I	
8/1/2013	47.75298	122.72502	7:41	17:22	CON	R.2-43	10:37:07	10:47:50	I	

Date	Latitude	Longitude	Time Effort Initiated	Time Effort Completed	Event Code	Pile	Start Time	End Time	Const Type	Comments
8/1/2013	47.75298	122.72502	7:41	17:22	CON	R.2-43	10:51:57	10:54:21	I	
8/1/2013	47.75298	122.72502	7:41	17:22	CON	S-43	11:10:01	11:16:27	I	
8/1/2013	47.75298	122.72502	7:41	17:22	CON	S-43	11:17:34	11:23:20	I	
8/1/2013	47.75259	122.72392	7:41	18:06	CON	T.8-40	11:38:31	11:39:00	V	36"
8/1/2013	47.75298	122.72502	7:41	17:22	CON	N-42	11:39:14	12:05:51	I	
8/1/2013	47.75259	122.72392	7:41	18:06	CON	T.8-40	11:39:40	11:41:07	V	
8/1/2013	47.75259	122.72392	7:41	18:06	CON	T.8-40	11:41:36	11:46:16	V	
8/1/2013	47.75259	122.72392	7:41	18:06	CON	T.1-40	13:02:52	13:14:27	V	36"
8/1/2013	47.75298	122.72502	7:41	17:22	CON	L-42	13:53:33	13:53:35	SSI	
8/1/2013	47.75298	122.72502	7:41	17:22	CON	L-42	13:54:21	13:54:23	SSI	
8/1/2013	47.75298	122.72502	7:41	17:22	CON	L-42	13:55:09	13:55:12	SSI	
8/1/2013	47.75298	122.72502	7:41	17:22	CON	L-42	13:55:57	14:15:10	I	
8/1/2013	47.75259	122.72392	7:41	18:06	CON	R.4-40	14:08:23	14:08:59	V	36"
8/1/2013	47.75259	122.72392	7:41	18:06	CON	R.4-40	14:09:46	14:10:57	V	
8/1/2013	47.75259	122.72392	7:41	18:06	CON	R.4-40	14:12:39	14:13:05	V	
8/1/2013	47.75259	122.72392	7:41	18:06	CON	R.4-40	14:13:53	14:19:24	V	
8/1/2013	47.75298	122.72502	7:41	17:22	CON	L-42	14:16:32	14:16:52	I	
8/1/2013	47.75298	122.72502	7:41	17:22	CON	J-42	14:43:52	14:46:48	I	
8/1/2013	47.75298	122.72502	7:41	17:22	CON	J-42	14:51:05	14:54:30	I	
8/1/2013	47.75298	122.72502	7:41	17:22	CON	J-42	14:58:29	15:00:04	I	
8/1/2013	47.75298	122.72502	7:41	17:22	CON	J-42	15:06:35	15:07:37	I	
8/1/2013	47.75298	122.72502	7:41	17:22	CON	R.4-42	15:25:52	15:29:36	I	
8/1/2013	47.75298	122.72502	7:41	17:22	CON	R.4-42	15:32:44	15:36:24	I	
8/1/2013	47.75298	122.72502	7:41	17:22	CON	R.4-42	15:40:38	15:42:40	I	
8/1/2013	47.75298	122.72502	7:41	17:22	CON	R.4-42	15:46:21	15:50:08	I	
8/1/2013	47.75298	122.72502	7:41	17:22	CON	R.4-42	15:54:06	15:55:47	I	
8/1/2013	47.75298	122.72502	7:41	17:22	CON	R.4-42	15:56:54	15:57:21	I	
8/1/2013	47.75298	122.72502	7:41	17:22	POST		15:58:00	16:28:00	NONE	
8/1/2013	47.75259	122.72392	7:41	18:06	CON	N-40	16:22:29	16:22:58	V	10 second delay for sighting #1 on tablet #2
8/1/2013	47.75259	122.72392	7:41	18:06	CON	N-40	16:24:55	16:26:10	V	
8/1/2013	47.75259	122.72392	7:41	18:06	CON	N-40	16:26:55	16:30:22	V	
8/1/2013	47.75259	122.72392	7:41	18:06	CON	L-40	17:30:41	17:33:08	V	36"
8/1/2013	47.75259	122.72392	7:41	18:06	CON	N-40	17:33:39	17:36:22	V	
8/2/2013	46.75337	122.72456	8:22	17:22	PRE		8:22:00	8:37:00	NONE	
8/2/2013	47.75259	122.72392	8:22	17:22	CON	J-40	8:37:19	8:37:58	V	36"
8/2/2013	47.75259	122.72392	8:22	17:22	CON	J-40	8:39:05	8:39:37	V	
8/2/2013	47.75259	122.72392	8:22	17:22	CON	J-40	8:41:25	8:45:46	V	
8/2/2013	46.75337	122.72456	8:22	17:22	CON	V.1-43	9:19:47	9:19:48	SSI	
8/2/2013	46.75337	122.72456	8:22	17:22	CON	V.1-43	9:20:34	9:20:36	SSI	

Date	Latitude	Longitude	Time Effort Initiated	Time Effort Completed	Event Code	Pile	Start Time	End Time	Const Type	Comments
8/2/2013	46.75337	122.72456	8:22	17:22	CON	V.1-43	9:21:22	9:21:24	SSI	
8/2/2013	46.75337	122.72456	8:22	17:22	CON	V.1-43	9:22:11	9:29:00	I	
8/2/2013	46.75337	122.72456	8:22	17:22	CON	V.1-43	9:30:23	9:31:09	I	
8/2/2013	47.75259	122.72392	8:22	17:22	CON	V.1-39	9:43:35	9:44:12	V	
8/2/2013	47.75259	122.72392	8:22	17:22	CON	V.1-39	9:44:38	9:50:23	V	
8/2/2013	47.75259	122.72392	8:22	17:22	CON	V.1-39	9:50:59	9:53:17	V	
8/2/2013	46.75337	122.72456	8:22	17:22	CON	T.5-43	9:53:14	10:07:50	I	
8/2/2013	46.75337	122.72456	8:22	17:22	CON	W-42	10:30:46	10:38:31	I	
8/2/2013	46.75337	122.72456	8:22	17:22	CON	T.8-42	10:50:47	11:03:25	I	
8/2/2013	47.75259	122.72392	8:22	17:22	CON	T.5-39	11:35:55	11:36:33	V	36"
8/2/2013	47.75259	122.72392	8:22	17:22	CON	T.5-39	11:38:09	11:39:40	V	
8/2/2013	47.75259	122.72392	8:22	17:22	CON	T.5-39	11:40:50	11:43:09	V	
8/2/2013	46.75337	122.72456	8:22	17:22	CON	T.1-42	13:01:02	13:01:04	SSI	
8/2/2013	46.75337	122.72456	8:22	17:22	CON	T.1-42	13:01:58	13:02:00	SSI	
8/2/2013	46.75337	122.72456	8:22	17:22	CON	T.1-42	13:02:49	13:02:53	SSI	
8/2/2013	46.75337	122.72456	8:22	17:22	CON	T.1-42	13:03:47	13:07:18	I	
8/2/2013	47.75259	122.72392	8:22	17:22	CON	S-39	13:55:10	13:55:38	V	36"
8/2/2013	47.75259	122.72392	8:22	17:22	CON	S-39	13:56:46	14:00:55	V	Shut down 59 seconds after harbor seal observed in shutdown zone. See sighting #3 on tablet #3
8/2/2013	47.75259	122.72392	8:22	17:22	MS	S-39	14:00:56	14:01:59	NONE	Shutdown. Observed mammal Out of SD zone and resumed driving pile.
8/2/2013	47.75259	122.72392	8:22	17:22	CON	S-39	14:02:24	14:05:11	V	
8/2/2013	47.75259	122.72392	8:22	17:22	CON	R.2-39	14:49:51	14:55:00	V	Approximate end time batteries died.
8/2/2013	46.75337	122.72456	8:22	17:22	CON	T.1-42	14:58:15	14:58:17	SSI	
8/2/2013	46.75337	122.72456	8:22	17:22	CON	T.1-42	14:58:57	14:58:59	SSI	
8/2/2013	46.75337	122.72456	8:22	17:22	CON	T.1-42	14:59:37	14:59:39	SSI	
8/2/2013	46.75337	122.72456	8:22	17:22	CON	T.1-42	15:04:28	15:04:40	I	
8/2/2013	46.75337	122.72456	8:22	17:22	CON	T.1-42	15:10:16	15:11:48	I	
8/2/2013	46.75337	122.72456	8:22	17:22	CON	T.1-42	15:17:00	15:21:46	I	
8/2/2013	46.75337	122.72456	8:22	17:22	CON	T.1-42	15:26:13	15:33:04	I	
8/2/2013	46.75337	122.72456	8:22	17:22	CON	T.1-42	15:35:04	15:37:25	I	
8/2/2013	47.75259	122.72392	8:22	17:22	CON	N-39	15:43:03	15:49:24	V	36"
8/2/2013	46.75337	122.72456	8:22	17:22	CON	T.1-42	15:45:48	15:50:54	I	
8/2/2013	46.75337	122.72456	8:22	17:22	CON	T.1-42	15:52:16	15:57:05	I	
8/2/2013	46.75337	122.72456	8:22	17:22	POST		15:58:00	16:28:00	NONE	
8/2/2013	47.75259	122.72392	8:22	17:22	CON	L-39	16:37:49	16:49:51	V	36"
8/2/2013	47.75259	122.72392	8:22	17:22	CON	L-39	16:51:21	16:51:50	V	
8/2/2013	47.75259	122.72392	8:22	17:22	POST		16:51:50	17:22:00	NONE	
8/3/2013	47.75277	122.72492	7:15	14:18	PRE		7:15:00	7:30:22	NONE	36"

Date	Latitude	Longitude	Time Effort Initiated	Time Effort Completed	Event Code	Pile	Start Time	End Time	Const Type	Comments
8/3/2013	47.75277	122.72492	7:15	14:18	CON	J-39	7:44:06	7:46:07	V	
8/3/2013	47.75277	122.72492	7:15	14:18	CON	J-39	7:48:16	7:49:51	V	
8/3/2013	47.75277	122.72492	7:15	14:18	CON	S-38	8:34:23	8:41:18	V	36"
8/3/2013	47.75277	122.72492	7:15	14:18	CON	R.2-38	10:17:43	10:18:36	V	36"
8/3/2013	47.75277	122.72492	7:15	14:18	CON	R.2-38	10:19:00	10:25:19	V	
8/3/2013	47.75277	122.72492	7:15	14:18	CON	N-38	11:11:26	11:16:10	V	36"
8/3/2013	47.75277	122.72492	7:15	14:18	CON	N-38	11:17:21	11:18:31	V	
8/3/2013	47.75277	122.72492	7:15	14:18	CON	L-38	12:12:22	12:13:31	V	36"
8/3/2013	47.75277	122.72492	7:15	14:18	CON	L-38	12:14:11	12:19:32	V	
8/3/2013	47.75277	122.72492	7:15	14:18	CON	J-38	13:41:25	13:45:31	V	36"
8/3/2013	47.75277	122.72492	7:15	14:18	CON	J-38	13:47:06	13:47:45	V	
8/3/2013	47.75277	122.72492	7:15	14:18	POST		13:48:00	14:18:00	NONE	
8/5/2013	47.75286	122.72426	7:40	16:57	PRE		7:40:00	8:10:00	NONE	
8/5/2013	47.7526	122.72487	7:40	16:57	PRE		7:40:00	7:55:00	NONE	
8/5/2013	47.7526	122.72487	7:40	16:57	CON	N-37	9:43:34	9:44:00	V	
8/5/2013	47.7526	122.72487	7:40	16:57	CON	N-37	9:44:46	9:46:00	V	
8/5/2013	47.7526	122.72487	7:40	16:57	CON	N-37	9:50:43	9:51:12	V	
8/5/2013	47.7526	122.72487	7:40	16:57	CON	N-37	10:14:58	10:15:14	V	
8/5/2013	47.7526	122.72487	7:40	16:57	CON	N-37	10:32:54	10:33:26	V	
8/5/2013	47.7526	122.72487	7:40	16:57	CON	N-37	10:34:20	10:35:38	V	
8/5/2013	47.7526	122.72487	7:40	16:57	CON	N-37	10:36:44	10:46:25	V	
8/5/2013	47.75286	122.72426	7:40	16:57	CON	W-41	11:15:53	11:15:55	SSI	
8/5/2013	47.75286	122.72426	7:40	16:57	CON	W-41	11:16:37	11:16:38	SSI	
8/5/2013	47.75286	122.72426	7:40	16:57	CON	W-41	11:17:23	11:17:25	SSI	
8/5/2013	47.75286	122.72426	7:40	16:57	CON	W-41	11:18:13	11:27:54	I	
8/5/2013	47.75286	122.72426	7:40	16:57	CON	T.8-41	11:42:01	11:54:38	I	
8/5/2013	47.7526	122.72487	7:40	16:57	CON	L-37	11:45:50	11:46:09	V	
8/5/2013	47.7526	122.72487	7:40	16:57	CON	L-37	11:46:48	11:47:59	V	
8/5/2013	47.7526	122.72487	7:40	16:57	CON	L-37	11:51:49	11:54:30	V	
8/5/2013	47.7526	122.72487	7:40	16:57	CON	L-37	11:58:43	11:59:42	V	
8/5/2013	47.7526	122.72487	7:40	16:57	CON	L-37	12:00:10	12:01:08	V	
8/5/2013	47.7526	122.72487	7:40	16:57	CON	L-37	12:14:12	12:16:07	V	
8/5/2013	47.7526	122.72487	7:40	16:57	CON	L-37	12:17:28	12:23:48	V	
8/5/2013	47.75286	122.72426	7:40	16:57	CON	T.1-41	12:43:41	12:43:44	SSI	
8/5/2013	47.75286	122.72426	7:40	16:57	CON	T.1-41	12:44:31	12:44:33	SSI	
8/5/2013	47.75286	122.72426	7:40	16:57	CON	T.1-41	12:45:20	12:45:23	SSI	
8/5/2013	47.75286	122.72426	7:40	16:57	CON	T.1-41	12:46:10	12:59:57	I	
8/5/2013	47.75286	122.72426	7:40	16:57	CON	R.4-41	13:11:19	13:35:23	I	
8/5/2013	47.7526	122.72487	7:40	16:57	CON	J-37	13:34:08	13:34:53	V	
8/5/2013	47.7526	122.72487	7:40	16:57	CON	J-37	13:36:14	13:40:33	V	

Date	Latitude	Longitude	Time Effort Initiated	Time Effort Completed	Event Code	Pile	Start Time	End Time	Const Type	Comments
8/5/2013	47.75286	122.72426	7:40	16:57	CON	N-41	13:51:44	14:07:50	I	
8/5/2013	47.75286	122.72426	7:40	16:57	CON	N-41	14:10:31	14:11:11	I	
8/5/2013	47.75286	122.72426	7:40	16:57	CON	N-40	14:30:37	14:46:09	I	
8/5/2013	47.7526	122.72487	7:40	16:57	CON	N-36	14:32:13	14:32:58	V	
8/5/2013	47.7526	122.72487	7:40	16:57	CON	N-36	14:33:48	14:38:15	V	
8/5/2013	47.75286	122.72426	7:40	16:57	CON	N-40	14:49:22	14:53:04	I	
8/5/2013	47.75286	122.72426	7:40	16:57	CON	R.4-40	15:07:50	15:23:53	I	
8/5/2013	47.75286	122.72426	7:40	16:57	MD	NA	15:23:55	16:00:00	NONE	MD due to beufort 3. Crew called it a day at 1600 after freeing stuck hammer from pile as wind was not laying down.
8/5/2013	47.7526	122.72487	7:40	16:57	CON	L-36	15:24:55	15:25:42	V	
8/5/2013	47.7526	122.72487	7:40	16:57	CON	L-36	15:26:35	15:27:19	V	
8/5/2013	47.7526	122.72487	7:40	16:57	CON	L-36	15:28:34	15:29:11	V	
8/5/2013	47.7526	122.72487	7:40	16:57	CON	L-36	15:31:12	15:36:14	V	
8/5/2013	47.7526	122.72487	7:40	16:57	CON	J-36	16:17:47	16:18:18	V	
8/5/2013	47.7526	122.72487	7:40	16:57	CON	J-36	16:19:04	16:20:07	V	
8/5/2013	47.7526	122.72487	7:40	16:57	CON	J-36	16:22:02	16:24:12	V	
8/5/2013	47.7526	122.72487	7:40	16:57	CON	J-36	16:25:34	16:26:42	V	
8/5/2013	47.75286	122.72426	7:40	16:57	POST		16:27:00	16:57:00	NONE	
8/5/2013	47.7526	122.72487	7:40	16:57	POST		16:27:00	16:57:00	NONE	
8/6/2013	47.75253	122.72493	7:31	16:28	PRE		7:31:00	7:46:00	NONE	pre construction observation
8/6/2013	47.75253	122.72493	7:31	16:28	CON	N-35	9:31:50	9:32:02	V	36" Batter pile @ 1/12
8/6/2013	47.75253	122.72493	7:31	16:28	CON	N-35	9:34:13	9:34:46	V	
8/6/2013	47.75253	122.72493	7:31	16:28	CON	N-35	9:36:16	9:38:53	V	
8/6/2013	47.75253	122.72493	7:31	16:28	CON	N-35	9:40:44	9:46:20	V	
8/6/2013	47.75253	122.72493	7:31	16:28	CON	L-35	11:21:54	11:22:25	V	36"
8/6/2013	47.75253	122.72493	7:31	16:28	CON	L-35	11:22:57	11:25:08	V	
8/6/2013	47.75253	122.72493	7:31	16:28	CON	L-35	11:25:49	11:31:18	V	
8/6/2013	47.75253	122.72493	7:31	16:28	CON	J-35	12:05:13	12:10:21	V	
8/6/2013	47.75253	122.72493	7:31	16:28	CON	N-34	14:05:00	14:05:29	V	36" Batter pile @ 1/12
8/6/2013	47.75253	122.72493	7:31	16:28	CON	N-34	14:07:03	14:10:15	V	
8/6/2013	47.75253	122.72493	7:31	16:28	CON	N-34	14:12:03	14:15:03	V	
8/6/2013	47.75253	122.72493	7:31	16:28	CON	L-34	14:58:07	14:58:28	V	36"
8/6/2013	47.75253	122.72493	7:31	16:28	CON	L-34	14:58:55	15:03:23	V	
8/6/2013	47.75253	122.72493	7:31	16:28	CON	L-34	15:03:55	15:04:31	V	
8/6/2013	47.75253	122.72493	7:31	16:28	CON	L-34	15:08:24	15:10:01	V	
8/6/2013	47.75253	122.72493	7:31	16:28	CON	J-34	15:48:16	15:52:35	V	36"
8/6/2013	47.75253	122.72493	7:31	16:28	CON	J-34	15:55:12	15:57:17	V	
8/6/2013	47.75253	122.72493	7:31	16:28	POST		15:57:45	16:28:21	NONE	

Date	Latitude	Longitude	Time Effort Initiated	Time Effort Completed	Event Code	Pile	Start Time	End Time	Const Type	Comments
8/7/2013	47.74227	122.72496	7:23	17:03	PRE		7:23:19	7:38:23	NONE	Pre watch
8/7/2013	47.74227	122.72496	7:23	17:03	CON	N-33	9:22:14	9:22:40	V	36" Batter pile @ 1/12
8/7/2013	47.74227	122.72496	7:23	17:03	CON	N-33	9:30:05	9:31:42	V	
8/7/2013	47.74227	122.72496	7:23	17:03	CON	N-33	9:37:27	9:39:15	V	
8/7/2013	47.74227	122.72496	7:23	17:03	CON	N-33	9:46:00	9:48:16	V	
8/7/2013	47.74227	122.72496	7:23	17:03	CON	N-33	9:49:37	9:51:52	V	
8/7/2013	47.74227	122.72496	7:23	17:03	CON	L-33	11:33:05	11:47:11	V	36"
8/7/2013	47.74227	122.72496	7:23	17:03	CON	J-33	13:02:57	13:03:58	V	36"
8/7/2013	47.74227	122.72496	7:23	17:03	CON	J-33	13:04:31	13:07:48	V	
8/7/2013	47.74227	122.72496	7:23	17:03	CON	J-33	13:09:39	13:10:00	V	
8/7/2013	47.74227	122.72496	7:23	17:03	CON	J-33	13:10:27	13:10:38	V	
8/7/2013	47.74227	122.72496	7:23	17:03	CON	N-32	14:31:39	14:32:34	V	36" Batter Pile @ 1/12.
8/7/2013	47.74227	122.72496	7:23	17:03	CON	N-32	14:47:40	14:48:08	V	
8/7/2013	47.74227	122.72496	7:23	17:03	CON	N-32	14:50:06	14:53:36	V	
8/7/2013	47.74227	122.72496	7:23	17:03	CON	L-32	15:44:30	15:47:41	V	36"
8/7/2013	47.74227	122.72496	7:23	17:03	CON	L-32	15:49:44	15:55:29	V	
8/7/2013	47.74227	122.72496	7:23	17:03	CON	J-32	16:26:22	16:29:45	V	36"
8/7/2013	47.74227	122.72496	7:23	17:03	POST	J-32	16:31:23	16:32:07	NONE	
8/8/2013	47.75215	122.72495	7:25	17:12	PRE		7:25:00	7:40:00	NONE	Pre watch
8/8/2013	47.75215	122.72495	7:25	17:12	CON	N-31	10:34:54	10:35:35	V	36" Batter Pile @ 1/12
8/8/2013	47.75215	122.72495	7:25	17:12	CON	N-31	10:38:34	10:43:28	V	
8/8/2013	47.75215	122.72495	7:25	17:12	CON	N-31	10:44:58	10:47:28	V	
8/8/2013	47.75215	122.72495	7:25	17:12	CON	L-31	13:23:31	13:23:54	V	36"
8/8/2013	47.75215	122.72495	7:25	17:12	CON	L-31	13:25:17	13:29:03	V	
8/8/2013	47.75215	122.72495	7:25	17:12	CON	L-31	13:30:14	13:31:39	V	
8/8/2013	47.75215	122.72495	7:25	17:12	CON	L-31	13:33:58	13:36:04	V	
8/8/2013	47.75215	122.72495	7:25	17:12	CON	J-31	14:17:26	14:18:23	V	36"
8/8/2013	47.75215	122.72495	7:25	17:12	CON	J-31	14:19:04	14:22:41	V	
8/8/2013	47.75215	122.72495	7:25	17:12	CON	J-31	14:23:43	14:25:53	V	
8/8/2013			9:53	17:12	CON	Temp-1	14:39:22	14:39:25	V	
8/8/2013			9:53	17:12	CON	Temp-1	14:59:58	15:05:50	V	
8/8/2013			9:53	17:12	CON	Temp-1	15:06:16	15:06:34	V	
8/8/2013			9:53	17:12	CON	Temp-1	15:07:20	15:07:43	V	
8/8/2013			9:53	17:12	CON	Temp-1	15:08:50	15:13:13	V	
8/8/2013	47.75215	122.72495	7:25	17:12	CON	N-30	15:33:07	15:33:34	V	36"
8/8/2013	47.75215	122.72495	7:25	17:12	CON	N-30	15:34:02	15:36:00	V	
8/8/2013	47.75215	122.72495	7:25	17:12	CON	N-30	15:37:59	15:41:42	V	
8/8/2013			9:53	17:12	CON	Temp-2	16:23:03	16:31:32	V	
8/8/2013	47.75215	122.72495	7:25	17:12	CON	L-30	16:26:56	16:28:17	V	36"
8/8/2013	47.75215	122.72495	7:25	17:12	CON	L-30	16:28:40	16:31:00	V	

Date	Latitude	Longitude	Time Effort Initiated	Time Effort Completed	Event Code	Pile	Start Time	End Time	Const Type	Comments
8/8/2013	47.75215	122.72495	7:25	17:12	CON	L-30	16:36:53	16:38:21	V	
8/8/2013	47.75215	122.72495	7:25	17:12	CON	L-30	16:38:53	16:39:35	V	
8/8/2013	47.75215	122.72495	7:25	17:12	CON	L-30	16:41:22	16:41:32	V	
8/8/2013	47.75215	122.72495	7:25	17:12	POST		16:42:00	17:12:00	NONE	Postwatch
8/9/2013	47.75212	122.7254	7:45	17:32	PRE		7:45:00	8:00:10	NONE	
8/9/2013	47.75212	122.7254	7:45	17:32	CON	J-30	8:48:31	8:48:46	V	36"
8/9/2013	47.75212	122.7254	7:45	17:32	CON	J-30	8:49:54	8:51:40	V	
8/9/2013	47.75212	122.7254	7:45	17:32	CON	J-30	8:53:11	8:56:52	V	
8/9/2013	47.75282	122.72417	7:25	17:32	CON	Temp-3	9:18:52	9:18:58	V	
8/9/2013	47.75282	122.72417	7:25	17:32	CON	Temp-3	9:20:49	9:24:15	V	
8/9/2013	47.75282	122.72417	7:25	17:32	CON	Temp-4	9:30:56	9:37:11	V	
8/9/2013	47.75212	122.7254	7:45	17:32	CON	N-29	11:45:49	11:46:25	V	36"
8/9/2013	47.75212	122.7254	7:45	17:32	CON	N-29	11:47:12	11:49:49	V	36"
8/9/2013	47.75212	122.7254	7:45	17:32	CON	N-29	11:50:33	11:51:35	V	36"
8/9/2013	47.75212	122.7254	7:45	17:32	CON	L-41	13:02:54	13:02:57	SSI	
8/9/2013	47.75212	122.7254	7:45	17:32	CON	L-41	13:03:44	13:03:45	SSI	
8/9/2013	47.75212	122.7254	7:45	17:32	CON	L-41	13:04:27	13:04:28	SSI	
8/9/2013	47.75212	122.7254	7:45	17:32	CON	L-41	13:05:12	13:23:22	I	
8/9/2013	47.75212	122.7254	7:45	17:32	CON	L-29	13:15:24	13:16:06	V	36"
8/9/2013	47.75212	122.7254	7:45	17:32	CON	L-29	13:17:32	13:19:05	V	36"
8/9/2013	47.75212	122.7254	7:45	17:32	CON	L-29	13:21:09	13:22:19	V	36"
8/9/2013	47.75212	122.7254	7:45	17:32	CON	L-41	13:28:00	13:28:35	I	
8/9/2013	47.75212	122.7254	7:45	17:32	CON	L-29	13:28:36	13:30:01	V	36"
8/9/2013	47.75212	122.7254	7:45	17:32	CON	L-29	13:32:41	13:34:45	V	36"
8/9/2013	47.75212	122.7254	7:45	17:32	CON	L-29	13:36:29	13:37:05	V	36"
8/9/2013	47.75212	122.7254	7:45	17:32	CON	J-41	13:39:31	13:47:55	I	
8/9/2013	47.75212	122.7254	7:45	17:32	CON	J-41	13:50:17	13:50:42	I	
8/9/2013	47.75212	122.7254	7:45	17:32	CON	J-40	14:01:00	14:05:50	I	
8/9/2013	47.75212	122.7254	7:45	17:32	CON	J-40	14:07:00	14:07:14	I	
8/9/2013	47.75212	122.7254	7:45	17:32	CON	J-29	14:14:38	14:15:44	V	36"
8/9/2013	47.75212	122.7254	7:45	17:32	CON	L-40	14:17:00	14:33:22	I	
8/9/2013	47.75212	122.7254	7:45	17:32	CON	J-29	14:17:16	14:17:58	V	36"
8/9/2013	47.75212	122.7254	7:45	17:32	CON	J-29	14:19:23	14:22:01	V	36"
8/9/2013	47.75212	122.7254	7:45	17:32	CON	L-40	14:36:35	14:37:15	I	
8/9/2013	47.75212	122.7254	7:45	17:32	CON	J-39	14:52:46	14:55:10	I	
8/9/2013	47.75212	122.7254	7:45	17:32	CON	J-39	15:00:44	15:03:18	I	
8/9/2013	47.75212	122.7254	7:45	17:32	CON	N-28	15:03:23	15:04:39	V	36"
8/9/2013	47.75212	122.7254	7:45	17:32	CON	N-28	15:06:01	15:08:01	V	36"
8/9/2013	47.75212	122.7254	7:45	17:32	CON	J-39	15:07:24	15:08:45	I	
8/9/2013	47.75212	122.7254	7:45	17:32	CON	N-28	15:10:17	15:10:42	V	36"

Date	Latitude	Longitude	Time Effort Initiated	Time Effort Completed	Event Code	Pile	Start Time	End Time	Const Type	Comments
8/9/2013	47.75212	122.7254	7:45	17:32	CON	J-39	15:10:22	15:10:50	I	
8/9/2013	47.75212	122.7254	7:45	17:32	CON	L-39	15:29:42	15:33:47	I	
8/9/2013	47.75212	122.7254	7:45	17:32	CON	L-28	15:48:42	15:49:50	V	36"
8/9/2013	47.75212	122.7254	7:45	17:32	CON	L-28	15:51:44	15:53:20	V	36"
8/9/2013	47.75212	122.7254	7:45	17:32	CON	L-28	16:00:49	16:01:35	V	36"
8/9/2013	47.75212	122.7254	7:45	17:32	CON	L-28	16:02:26	16:03:09	V	36"
8/9/2013	47.75212	122.7254	7:45	17:32	CON	L-28	16:05:46	16:07:55	V	36"
8/9/2013	47.75212	122.7254	7:45	17:32	CON	N-39	16:16:51	16:16:53	SSI	
8/9/2013	47.75212	122.7254	7:45	17:32	CON	N-39	16:17:37	16:17:41	SSI	
8/9/2013	47.75212	122.7254	7:45	17:32	CON	N-39	16:18:27	16:18:29	SSI	
8/9/2013	47.75212	122.7254	7:45	17:32	CON	N-39	16:19:20	16:34:29	I	
8/9/2013	47.75212	122.7254	7:45	17:32	CON	J-28	16:43:34	16:44:07	V	36"
8/9/2013	47.75212	122.7254	7:45	17:32	CON	J-28	16:44:56	16:46:44	V	36"
8/9/2013	47.75212	122.7254	7:45	17:32	CON	J-28	16:50:28	16:51:02	V	36"
8/9/2013	47.75212	122.7254	7:45	17:32	CON	J-28	16:53:02	16:54:09	V	36"
8/9/2013	47.75212	122.7254	7:45	17:32	CON	J-28	16:55:20	16:57:23	V	36"
8/9/2013	47.75212	122.7254	7:45	17:32	CON	J-28	16:59:54	17:00:18	V	36"
8/9/2013	47.75212	122.7254	7:45	17:32	POST		17:02:00	17:32:00	NONE	
8/12/2013	47.75178	122.72498	7:51	16:34	PRE		7:51:00	8:21:00	NONE	
8/12/2013	47.75288	122.72437	7:51	16:34	CON	T23-B	11:20:00	11:23:12	V	36"
8/12/2013	47.75288	122.72437	7:51	16:34	CON	T23-B	11:23:43	11:25:58	V	36"
8/12/2013	47.75288	122.72437	7:51	16:34	CON	T23-B	11:26:36	11:27:08	V	36"
8/12/2013	47.75288	122.72437	7:51	16:34	CON	T23-C	11:35:17	11:42:26	V	36"
8/12/2013	47.75288	122.72437	7:51	16:34	CON	T23-D	11:48:18	11:56:01	V	36"
8/12/2013	47.75288	122.72437	7:51	16:34	CON	T23-D	11:57:30	12:01:58	V	36"
8/12/2013	47.75288	122.72437	7:51	16:34	CON	T23-D	12:04:05	12:09:00	V	36"
8/12/2013	47.75288	122.72437	7:51	16:34	CON	T24-B	15:41:38	15:50:08	V	36"
8/12/2013	47.75178	122.72498	7:51	16:34	POST		16:04:00	16:34:00	NONE	
8/13/2013	47.75177	122.72506	7:13	16:55	PRE		7:13:00	7:28:00	NONE	
8/13/2013	47.75288	122.72437	7:13	16:55	CON	T24-B	7:44:14	7:50:34	V	
8/13/2013	47.75288	122.72437	7:13	16:55	CON	T24-B	7:53:17	7:58:06	V	
8/13/2013	47.75288	122.72437	7:13	16:55	CON	T24-C	8:03:16	8:11:23	V	
8/13/2013	47.75177	122.72506	7:13	16:55	CON	X-26	8:16:52	8:17:17	V	48" Piles
8/13/2013	47.75177	122.72506	7:13	16:55	CON	X-26	8:21:18	8:21:47	V	
8/13/2013	47.75288	122.72437	7:13	16:55	CON	T24-D	8:24:07	8:34:30	V	
8/13/2013	47.75177	122.72506	7:13	16:55	CON	X-26	8:28:07	8:28:31	V	
8/13/2013	47.75177	122.72506	7:13	16:55	CON	X-26	8:29:48	8:30:06	V	
8/13/2013	47.75177	122.72506	7:13	16:55	CON	X-26	8:31:19	8:31:41	V	
8/13/2013	47.75177	122.72506	7:13	16:55	CON	X-26	8:32:50	8:33:28	V	
8/13/2013	47.75177	122.72506	7:13	16:55	CON	X-26	8:34:28	8:34:56	V	

Date	Latitude	Longitude	Time Effort Initiated	Time Effort Completed	Event Code	Pile	Start Time	End Time	Const Type	Comments
8/13/2013	47.75288	122.72437	7:13	16:55	CON	T24-D	8:35:33	8:35:35	V	
8/13/2013	47.75177	122.72506	7:13	16:55	CON	X-26	8:36:03	8:36:37	V	
8/13/2013	47.75177	122.72506	7:13	16:55	CON	X-26	8:37:03	8:37:55	V	
8/13/2013	47.75177	122.72506	7:13	16:55	CON	X-26	8:39:40	8:40:08	V	
8/13/2013	47.75177	122.72506	7:13	16:55	CON	X-26	8:42:12	8:42:46	V	
8/13/2013	47.75177	122.72506	7:13	16:55	CON	X-26	8:53:03	8:53:09	V	
8/13/2013	47.75177	122.72506	7:13	16:55	CON	X-26	9:04:35	9:06:51	V	
8/13/2013	47.75288	122.72437	7:13	16:55	CON	Temp-1	10:31:52	10:34:28	V	Out
8/13/2013	47.75288	122.72437	7:13	16:55	CON	Temp-1	10:52:29	10:58:23	V	In
8/13/2013	47.75288	122.72437	7:13	16:55	CON	Temp-2	11:01:49	11:04:05	V	Out
8/13/2013	47.75288	122.72437	7:13	16:55	CON	Temp-2	11:12:13	11:20:32	V	In
8/13/2013	47.75177	122.72506	7:13	16:55	CON	V-26	11:14:10	11:14:46	V	
8/13/2013	47.75177	122.72506	7:13	16:55	CON	V-26	11:17:34	11:18:53	V	
8/13/2013	47.75177	122.72506	7:13	16:55	CON	V-26	11:20:48	11:21:26	V	
8/13/2013	47.75177	122.72506	7:13	16:55	CON	V-26	11:22:33	11:23:33	V	
8/13/2013	47.75177	122.72506	7:13	16:55	CON	V-26	11:24:36	11:24:53	V	
8/13/2013	47.75288	122.72437	7:13	16:55	CON	Temp-3	11:26:09	11:27:56	V	Out
8/13/2013	47.75177	122.72506	7:13	16:55	CON	V-26	11:26:57	11:27:28	V	
8/13/2013	47.75177	122.72506	7:13	16:55	CON	V-26	11:29:20	11:30:44	V	
8/13/2013	47.75288	122.72437	7:13	16:55	CON	Temp-3	11:33:20	11:40:35	V	In
8/13/2013	47.75177	122.72506	7:13	16:55	CON	V-26	11:34:36	11:36:09	V	
8/13/2013	47.75288	122.72437	7:13	16:55	CON	Temp-4	12:46:01	12:48:40	V	Out
8/13/2013	47.75288	122.72437	7:13	16:55	CON	Temp-4	12:53:43	12:58:46	V	In
8/13/2013	47.75177	122.72506	7:13	16:55	CON	T-26	13:03:04	13:05:07	V	
8/13/2013	47.75177	122.72506	7:13	16:55	CON	T-26	13:09:01	13:09:54	V	
8/13/2013	47.75177	122.72506	7:13	16:55	CON	T-26	13:10:48	13:11:57	V	
8/13/2013	47.75177	122.72506	7:13	16:55	CON	T-26	13:12:52	13:13:41	V	
8/13/2013	47.75177	122.72506	7:13	16:55	CON	T-26	13:14:30	13:17:00	V	
8/13/2013	47.75288	122.72437	7:13	16:55	CON	Temp-4	13:57:48	13:58:41	V	Out
8/13/2013	47.75177	122.72506	7:13	16:55	CON	R-26	14:03:43	14:04:22	V	
8/13/2013	47.75177	122.72506	7:13	16:55	CON	R-26	14:06:01	14:06:54	V	
8/13/2013	47.75177	122.72506	7:13	16:55	CON	R-26	14:07:26	14:07:57	V	
8/13/2013	47.75177	122.72506	7:13	16:55	CON	R-26	14:08:32	14:10:47	V	
8/13/2013	47.75177	122.72506	7:13	16:55	CON	R-26	14:14:24	14:15:36	V	
8/13/2013	47.75177	122.72506	7:13	16:55	CON	R-26	14:17:02	14:18:00	V	
8/13/2013	47.75288	122.72437	7:13	16:55	CON	Temp-4	14:20:05	14:20:45	V	Out after stabbing in
8/13/2013	47.75177	122.72506	7:13	16:55	CON	R-26	14:20:33	14:21:09	V	
8/13/2013	47.75177	122.72506	7:13	16:55	CON	R-26	14:21:55	14:24:21	V	
8/13/2013	47.75288	122.72437	7:13	16:55	CON	Temp-4	14:34:54	14:41:58	V	In
8/13/2013	47.75288	122.72437	7:13	16:55	CON	Temp-4	14:42:40	14:44:21	V	

Date	Latitude	Longitude	Time Effort Initiated	Time Effort Completed	Event Code	Pile	Start Time	End Time	Const Type	Comments
8/13/2013	47.75288	122.72437	7:13	16:55	CON	Temp-4	14:44:59	14:45:00	V	
8/13/2013	47.75288	122.72437	7:13	16:55	CON	Temp-4	14:45:34	14:47:01	V	
8/13/2013	47.75288	122.72437	7:13	16:55	CON	Temp-3	14:57:51	14:58:44	V	Out
8/13/2013	47.75288	122.72437	7:13	16:55	CON	Temp-3	15:03:30	15:04:51	V	In
8/13/2013	47.75288	122.72437	7:13	16:55	CON	Temp-3	15:05:01	15:07:53	V	
8/13/2013	47.75288	122.72437	7:13	16:55	CON	Temp-3	15:08:06	15:09:07	V	
8/13/2013	47.75288	122.72437	7:13	16:55	CON	Temp-3	15:11:41	15:12:16	V	
8/13/2013	47.75288	122.72437	7:13	16:55	CON	Temp-3	15:14:05	15:14:33	V	
8/13/2013	47.75288	122.72437	7:13	16:55	CON	Temp-3	15:16:18	15:17:27	V	
8/13/2013	47.75288	122.72437	7:13	16:55	CON	Temp-3	15:18:54	15:24:03	V	
8/13/2013	47.75288	122.72437	7:13	16:55	CON	Temp-3	15:25:17	15:26:23	V	
8/13/2013	47.75288	122.72437	7:13	16:55	CON	Temp-1	15:31:02	15:32:16	V	Out
8/13/2013	47.75288	122.72437	7:13	16:55	CON	Temp-1	15:37:49	15:40:01	V	In
8/13/2013	47.75288	122.72437	7:13	16:55	CON	Temp-1	15:40:53	15:44:06	V	
8/13/2013	47.75288	122.72437	7:13	16:55	CON	Temp-1	15:44:39	15:45:48	V	
8/13/2013	47.75288	122.72437	7:13	16:55	CON	Temp-2	15:52:24	15:53:27	V	Out
8/13/2013	47.75288	122.72437	7:13	16:55	CON	Temp-2	16:00:38	16:04:23	V	In
8/13/2013	47.75288	122.72437	7:13	16:55	CON	Temp-2	16:04:41	16:04:51	V	
8/13/2013	47.75177	122.72506	7:13	16:55	CON	M-26	16:14:40	16:15:20	V	
8/13/2013	47.75177	122.72506	7:13	16:55	CON	M-26	16:16:36	16:17:14	V	
8/13/2013	47.75177	122.72506	7:13	16:55	CON	M-26	16:18:03	16:21:29	V	
8/13/2013	47.75177	122.72506	7:13	16:55	CON	M-26	16:22:20	16:22:42	V	
8/13/2013	47.75177	122.72506	7:13	16:55	CON	M-26	16:23:59	16:24:58	V	
8/13/2013	47.75177	122.72506	7:13	16:55	POST		16:25:00	16:55:00	NONE	
8/14/2013	47.7519	122.7252	7:19	17:21	PRE		7:19:00	7:49:29	NONE	
8/14/2013	47.7519	122.7252	7:19	17:21	CON	J-26	8:02:54	8:03:14	V	
8/14/2013	47.7519	122.7252	7:19	17:21	CON	J-26	8:13:28	8:14:40	V	
8/14/2013	47.7519	122.7252	7:19	17:21	CON	J-26	8:15:24	8:20:33	V	
8/14/2013	47.7519	122.7252	7:19	17:21	CON	J-26	8:21:55	8:27:58	V	
8/14/2013	47.7519	122.7252	7:19	17:21	CON	X-25	9:05:38	9:18:14	V	
8/14/2013	47.7519	122.7252	7:19	17:21	CON	X-25	9:19:37	9:21:26	V	
8/14/2013	47.7519	122.7252	7:19	17:21	CON	X-25	9:22:07	9:22:18	V	
8/14/2013	47.7519	122.7252	7:19	17:21	CON	X-25	9:27:05	9:28:30	V	
8/14/2013	47.75288	122.72437	7:19	17:21	CON	T25-B	10:28:07	10:37:27	V	36"
8/14/2013	47.7519	122.7252	7:19	17:21	CON	V-25	10:30:09	10:31:05	V	
8/14/2013	47.7519	122.7252	7:19	17:21	CON	V-25	10:33:41	10:42:51	V	
8/14/2013	47.7519	122.7252	7:19	17:21	CON	T-25	11:21:53	11:23:56	V	
8/14/2013	47.7519	122.7252	7:19	17:21	CON	T-25	11:26:42	11:30:44	V	
8/14/2013	47.75288	122.72437	7:19	17:21	CON	Temp-1	12:00:15	12:05:24	V	temporary pile pile snapped off hammer

Date	Latitude	Longitude	Time Effort Initiated	Time Effort Completed	Event Code	Pile	Start Time	End Time	Const Type	Comments
8/14/2013	47.7519	122.7252	7:19	17:21	CON	R-25	13:05:39	13:06:07	V	
8/14/2013	47.7519	122.7252	7:19	17:21	CON	R-25	13:06:41	13:07:33	V	
8/14/2013	47.7519	122.7252	7:19	17:21	CON	R-25	13:08:00	13:13:55	V	
8/14/2013	47.7519	122.7252	7:19	17:21	CON	M-25	14:34:52	14:36:31	V	
8/14/2013	47.7519	122.7252	7:19	17:21	CON	M-25	14:38:02	14:45:43	V	
8/14/2013	47.7519	122.7252	7:19	17:21	CON	J-25	15:29:02	15:29:41	V	
8/14/2013	47.7519	122.7252	7:19	17:21	CON	J-25	15:31:28	15:37:05	V	
8/14/2013	47.7519	122.7252	7:19	17:21	CON	J-25	15:37:59	15:39:06	V	
8/14/2013	47.7519	122.7252	7:19	17:21	CON	J-25	15:39:53	15:41:59	V	
8/14/2013	47.7519	122.7252	7:19	17:21	CON	J-25	15:43:26	15:45:04	V	
8/14/2013	47.7519	122.7252	7:19	17:21	CON	J-25	15:54:00	16:13:10	V	
8/14/2013	47.7519	122.7252	7:19	17:21	CON	J-25	16:19:21	16:20:23	V	
8/14/2013	47.7519	122.7252	7:19	17:21	CON	J-25	16:22:01	16:22:43	V	
8/14/2013	47.7519	122.7252	7:19	17:21	CON	J-25	16:25:00	16:31:58	V	
8/14/2013	47.7519	122.7252	7:19	17:21	CON	J-25	16:40:44	16:44:54	V	
8/14/2013	47.7519	122.7252	7:19	17:21	CON	J-25	16:46:18	16:46:28	V	
8/14/2013	47.7519	122.7252	7:19	17:21	CON	J-25	16:47:47	16:49:27	V	
8/14/2013	47.7519	122.7252	7:19	17:21	CON	J-25	16:50:27	16:51:09	V	
8/14/2013	47.7519	122.7252	7:19	17:21	POST		16:51:27	17:21:47	NONE	
8/15/2013	47.7519	122.7252	7:30	17:21	PRE		7:30:00	8:00:00	NONE	
8/15/2013	47.75288	122.72437	7:30	17:21	CON	T25-C	11:09:39	11:18:13	V	36"
8/15/2013	47.7519	122.7252	7:30	17:21	CON	X-26	11:20:52	11:20:53	SSI	48" Piles
8/15/2013	47.7519	122.7252	7:30	17:21	CON	X-26	11:21:42	11:21:45	SSI	
8/15/2013	47.7519	122.7252	7:30	17:21	CON	X-26	11:22:32	11:22:35	SSI	
8/15/2013	47.7519	122.7252	7:30	17:21	CON	X-26	11:23:07	11:29:13	I	
8/15/2013	47.75288	122.72437	7:30	17:21	CON	T25-D	11:25:06	11:36:32	V	36"
8/15/2013	47.75288	122.72437	7:30	17:21	CON	T25-D	11:44:19	11:44:34	V	36"
8/15/2013	47.75288	122.72437	7:30	17:21	CON	T25-D	11:44:47	11:48:10	V	36"
8/15/2013	47.7519	122.7252	7:30	17:21	CON	X-25	11:55:56	12:02:46	I	
8/15/2013	47.7519	122.7252	7:30	17:21	CON	V-26	12:51:42	12:51:44	SSI	
8/15/2013	47.7519	122.7252	7:30	17:21	CON	V-26	12:52:33	12:52:34	SSI	
8/15/2013	47.7519	122.7252	7:30	17:21	CON	V-26	12:53:21	12:53:23	SSI	
8/15/2013	47.7519	122.7252	7:30	17:21	CON	V-26	12:54:10	13:00:31	I	
8/15/2013	47.7519	122.7252	7:30	17:21	CON	V-25	13:14:21	13:19:47	I	
8/15/2013	47.7519	122.7252	7:30	17:21	CON	T-26	13:35:21	13:42:13	I	
8/15/2013	47.7519	122.7252	7:30	17:21	CON	T-25	13:59:29	14:07:14	I	
8/15/2013	47.7519	122.7252	7:30	17:21	CON	R-25	14:19:43	14:31:27	I	
8/15/2013	47.7519	122.7252	7:30	17:21	CON	R-26	14:54:32	15:01:36	I	
8/15/2013	47.7519	122.7252	7:30	17:21	CON	M-26	15:17:26	15:25:27	I	
8/15/2013	47.7519	122.7252	7:30	17:21	CON	M-25	15:36:25	15:41:26	I	

Date	Latitude	Longitude	Time Effort Initiated	Time Effort Completed	Event Code	Pile	Start Time	End Time	Const Type	Comments
8/15/2013	47.75288	122.72437	7:30	17:21	CON	T26-C	15:36:55	15:55:33	V	36"
8/15/2013	47.7519	122.7252	7:30	17:21	CON	J-26	15:53:31	16:00:56	I	
8/15/2013	47.75288	122.72437	7:30	17:21	CON	T26-D	16:00:57	16:14:09	V	36"
8/15/2013	47.7519	122.7252	7:30	17:21	CON	J-25	16:14:36	16:21:35	I	
8/15/2013	47.7519	122.7252	7:30	17:21	CON	J-25	16:44:24	16:50:12	I	
8/15/2013	47.7519	122.7252	7:30	17:21	POST		16:51:00	17:21:00	NONE	
8/16/2013	47.75171	122.72483	7:17	15:36	PRE		7:17:00	7:32:00	NONE	
8/16/2013	47.75171	122.72483	7:17	15:36	CON	X-24	8:00:59	8:01:28	V	
8/16/2013	47.75171	122.72483	7:17	15:36	CON	X-24	8:02:34	8:03:21	V	
8/16/2013	47.75171	122.72483	7:17	15:36	CON	X-24	8:05:27	8:05:58	V	
8/16/2013	47.75171	122.72483	7:17	15:36	CON	X-24	8:06:22	8:07:19	V	
8/16/2013	47.75171	122.72483	7:17	15:36	CON	X-24	8:07:55	8:09:15	V	
8/16/2013	47.75171	122.72483	7:17	15:36	CON	X-24	8:10:04	8:11:15	V	
8/16/2013	47.75171	122.72483	7:17	15:36	CON	V-24	8:50:36	8:51:46	V	
8/16/2013	47.75171	122.72483	7:17	15:36	CON	V-24	8:53:01	8:56:21	V	
8/16/2013	47.75171	122.72483	7:17	15:36	CON	V-24	8:56:53	8:59:07	V	
8/16/2013	47.75288	122.72437	7:17	15:36	CON	T26-B	8:59:53	9:17:37	V	36"
8/16/2013	47.75171	122.72483	7:17	15:36	CON	T-24	9:35:43	9:36:37	V	
8/16/2013	47.75171	122.72483	7:17	15:36	CON	T-24	9:37:20	9:39:42	V	
8/16/2013	47.75171	122.72483	7:17	15:36	CON	T-24	9:41:25	9:45:14	V	
8/16/2013	47.75171	122.72483	7:17	15:36	CON	R-24	11:03:46	11:05:51	V	
8/16/2013	47.75171	122.72483	7:17	15:36	CON	R-24	11:11:20	11:13:34	V	
8/16/2013	47.75171	122.72483	7:17	15:36	CON	R-24	11:14:30	11:16:41	V	
8/16/2013	47.75171	122.72483	7:17	15:36	CON	R-24	11:17:47	11:20:45	V	
8/16/2013	47.75288	122.72437	7:17	15:36	CON	Temp-1	11:22:23	11:27:48	V	framing pile
8/16/2013	47.75288	122.72437	7:17	15:36	CON	Temp-1	11:42:09	11:45:10	V	framing pile
8/16/2013	47.75171	122.72483	7:17	15:36	CON	M-24	11:55:17	11:55:43	V	
8/16/2013	47.75171	122.72483	7:17	15:36	CON	M-24	11:56:02	11:59:25	V	
8/16/2013	47.75171	122.72483	7:17	15:36	CON	M-24	12:00:01	12:02:25	V	
8/16/2013	47.75171	122.72483	7:17	15:36	CON	M-24	12:02:50	12:04:14	V	
8/16/2013	47.75171	122.72483	7:17	15:36	CON	M-24	12:04:50	12:08:22	V	
8/16/2013	47.75288	122.72437	7:17	15:36	CON	Temp-2	12:50:46	12:51:20	V	framing pile
8/16/2013	47.75288	122.72437	7:17	15:36	CON	Temp-2	12:56:29	13:00:53	V	framing pile; vibe Out
8/16/2013	47.75288	122.72437	7:17	15:36	CON	Temp-2	13:11:30	13:20:00	V	framing pile; vibe in
8/16/2013	47.75288	122.72437	7:17	15:36	CON	Temp-3	14:02:25	14:06:09	V	framing pile
8/16/2013	47.75288	122.72437	7:17	15:36	CON	Temp-3	14:14:01	14:28:02	V	framing pile
8/16/2013	47.75288	122.72437	7:17	15:36	CON	Temp-3	14:20:23	14:25:38	V	framing pile
8/16/2013	47.75288	122.72437	7:17	15:36	CON	Temp-3	14:29:21	14:35:31	V	framing pile
8/16/2013	47.75171	122.72483	7:17	15:36	CON	J-24	14:42:16	14:44:29	V	
8/16/2013	47.75171	122.72483	7:17	15:36	CON	J-24	14:46:06	14:49:29	V	

Date	Latitude	Longitude	Time Effort Initiated	Time Effort Completed	Event Code	Pile	Start Time	End Time	Const Type	Comments
8/16/2013	47.75288	122.72437	7:17	15:36	CON	Temp-4	14:48:09	14:50:37	V	framing pile
8/16/2013	47.75171	122.72483	7:17	15:36	CON	J-24	14:50:31	14:53:05	V	
8/16/2013	47.75171	122.72483	7:17	15:36	CON	J-24	14:53:47	14:58:51	V	
8/16/2013	47.75288	122.72437	7:17	15:36	CON	Temp-4	14:59:09	15:06:10	V	framing pile
8/16/2013	47.75171	122.72483	7:17	15:36	POST		15:06:00	15:36:00	NONE	
8/16/2013	47.75288	122.72437	7:17	15:36	CON	Temp-4	15:25:37	15:36:03	V	framing pile
8/19/2013	47.75171	122.72483	7:20	17:32	PRE		7:20:00	7:35:00	NONE	
8/19/2013	47.75256	122.72429	7:20	17:32	CON	Temp-1	10:30:23	10:40:50	V	framing piles
8/19/2013	47.75171	122.72483	7:20	17:32	CON	X-23	10:40:30	10:43:07	V	
8/19/2013	47.75256	122.72429	7:20	17:32	CON	Temp-1	10:40:55	10:42:46	V	framing piles
8/19/2013	47.75171	122.72483	7:20	17:32	CON	X-23	10:44:53	10:45:51	V	
8/19/2013	47.75171	122.72483	7:20	17:32	CON	X-23	10:47:17	10:48:52	V	
8/19/2013	47.75171	122.72483	7:20	17:32	CON	X-23	10:49:39	10:51:30	V	
8/19/2013	47.75171	122.72483	7:20	17:32	CON	X-23	10:52:40	10:54:25	V	
8/19/2013	47.75256	122.72429	7:20	17:32	CON	Temp-1	11:21:29	11:32:52	V	framing piles
8/19/2013	47.75171	122.72483	7:20	17:32	CON	V-23	11:32:20	11:32:55	V	
8/19/2013	47.75171	122.72483	7:20	17:32	CON	V-23	11:35:55	11:36:28	V	
8/19/2013	47.75171	122.72483	7:20	17:32	CON	V-23	11:37:43	11:45:27	V	
8/19/2013	47.75256	122.72429	7:20	17:32	CON	Temp-2	11:39:52	11:43:12	V	framing piles
8/19/2013	47.75171	122.72483	7:20	17:32	CON	V-23	11:46:13	11:48:33	V	
8/19/2013	47.75171	122.72483	7:20	17:32	CON	V-23	11:50:13	12:13:26	V	
8/19/2013	47.75171	122.72483	7:20	17:32	CON	V-23	12:14:04	12:16:05	V	
8/19/2013	47.75256	122.72429	7:20	17:32	CON	Temp-2	12:27:18	12:35:37	V	framing piles
8/19/2013	47.75256	122.72429	7:20	17:32	CON	Temp-2	12:43:12	12:48:29	V	framing piles
8/19/2013	47.75256	122.72429	7:20	17:32	CON	Temp-2	12:50:17	12:50:55	V	framing piles
8/19/2013	47.75256	122.72429	7:20	17:32	CON	Temp-3	13:18:08	13:20:08	V	framing piles
8/19/2013	47.75256	122.72429	7:20	17:32	CON	Temp-3	13:23:37	13:26:36	V	framing piles
8/19/2013	47.75256	122.72429	7:20	17:32	CON	Temp-3	13:33:34	13:41:59	V	framing piles
8/19/2013	47.75256	122.72429	7:20	17:32	CON	Temp-3	13:44:14	14:02:49	V	framing piles
8/19/2013	47.75256	122.72429	7:20	17:32	CON	Temp-3	13:45:28	13:45:39	V	framing piles
8/19/2013	47.75256	122.72429	7:20	17:32	CON	Temp-3	13:46:23	13:46:39	V	framing piles
8/19/2013	47.75256	122.72429	7:20	17:32	CON	Temp-3	13:46:49	13:47:33	V	framing piles
8/19/2013	47.75256	122.72429	7:20	17:32	CON	Temp-3	13:48:23	13:51:18	V	framing piles
8/19/2013	47.75256	122.72429	7:20	17:32	CON	Temp-4	13:54:38	13:56:40	V	framing piles
8/19/2013	47.75256	122.72429	7:20	17:32	CON	Temp-4	13:59:44	14:04:45	V	framing piles
8/19/2013	47.75171	122.72483	7:20	17:32	CON	T-23	14:02:08	14:06:13	V	
8/19/2013	47.75171	122.72483	7:20	17:32	CON	T-23	14:07:48	14:09:36	V	
8/19/2013	47.75256	122.72429	7:20	17:32	CON	Temp-4	14:08:47	14:10:26	V	framing piles
8/19/2013	47.75256	122.72429	7:20	17:32	CON	Temp-4	14:11:07	14:18:33	V	framing piles
8/19/2013	47.75171	122.72483	7:20	17:32	CON	T-23	14:12:09	14:12:56	V	

Date	Latitude	Longitude	Time Effort Initiated	Time Effort Completed	Event Code	Pile	Start Time	End Time	Const Type	Comments
8/19/2013	47.75256	122.72429	7:20	17:32	CON	Temp-4	14:19:41	14:22:36	V	framing piles
8/19/2013	47.75256	122.72429	7:20	17:32	CON	Temp-4	14:23:02	14:23:17	V	framing piles
8/19/2013	47.75171	122.72483	7:20	17:32	CON	R-23	14:56:39	14:57:27	V	
8/19/2013	47.75171	122.72483	7:20	17:32	CON	R-23	14:58:33	15:06:11	V	
8/19/2013	47.75171	122.72483	7:20	17:32	CON	M-23	15:46:15	15:56:21	V	
8/19/2013	47.75171	122.72483	7:20	17:32	CON	J-23	16:50:00	17:01:27	V	
8/19/2013	47.75171	122.72483	7:20	17:32	POST		17:02:00	17:32:00	NONE	
8/20/2013	47.75171	122.72572	7:30	16:40	PRE		7:30:00	8:00:00	NONE	
8/20/2013	47.75256	122.72429	7:30	16:40	CON	T27-B	8:17:36	8:47:29	V	36"
8/20/2013	47.75171	122.72572	7:30	16:40	CON	X-23	8:43:12	8:43:18	SSI	
8/20/2013	47.75171	122.72572	7:30	16:40	CON	X-23	8:43:58	8:44:01	SSI	
8/20/2013	47.75171	122.72572	7:30	16:40	CON	X-23	8:44:39	8:44:42	SSI	
8/20/2013	47.75171	122.72572	7:30	16:40	CON	X-23	8:45:21	8:45:24	I	
8/20/2013	47.75171	122.72572	7:30	16:40	CON	X-23	8:46:02	8:52:17	I	
8/20/2013	47.75171	122.72572	7:30	16:40	CON	X-23	8:54:35	8:58:15	I	
8/20/2013	47.75171	122.72572	7:30	16:40	CON	X-23	8:59:25	9:00:06	I	
8/20/2013	47.75256	122.72429	7:30	16:40	CON	T27-D	9:00:01	9:08:29	V	36"
8/20/2013	47.75256	122.72429	7:30	16:40	CON	T27-D	9:09:50	9:32:21	V	36"
8/20/2013	47.75171	122.72572	7:30	16:40	CON	X-24	9:25:51	9:32:39	I	
8/20/2013	47.75171	122.72572	7:30	16:40	CON	V-23	10:07:04	10:07:07	SSI	
8/20/2013	47.75171	122.72572	7:30	16:40	CON	V-23	10:07:55	10:07:59	SSI	
8/20/2013	47.75171	122.72572	7:30	16:40	CON	V-23	10:08:50	10:08:54	SSI	
8/20/2013	47.75171	122.72572	7:30	16:40	CON	V-23	10:09:44	10:31:58	I	
8/20/2013	47.75171	122.72572	7:30	16:40	CON	V-23	10:34:52	10:35:54	I	
8/20/2013	47.75171	122.72572	7:30	16:40	CON	V-24	10:56:30	11:08:14	I	
8/20/2013	47.75256	122.72429	7:30	16:40	CON	T27-C	11:15:16	11:27:20	V	36"
8/20/2013	47.75256	122.72429	7:30	16:40	CON	T27-C	11:28:08	11:40:32	V	36"
8/20/2013	47.75171	122.72572	7:30	16:40	CON	T-23	11:38:19	11:38:21	SSI	
8/20/2013	47.75171	122.72572	7:30	16:40	CON	T-23	11:38:51	11:38:53	SSI	
8/20/2013	47.75171	122.72572	7:30	16:40	CON	T-23	11:39:33	11:39:35	SSI	
8/20/2013	47.75171	122.72572	7:30	16:40	CON	T-23	11:40:14	11:43:36	I	
8/20/2013	47.75171	122.72572	7:30	16:40	CON	T-23	12:49:31	12:56:09	I	
8/20/2013	47.75171	122.72572	7:30	16:40	CON	T-23	12:56:14	12:56:17	SSI	
8/20/2013	47.75171	122.72572	7:30	16:40	CON	T-23	12:57:23	12:57:25	SSI	
8/20/2013	47.75171	122.72572	7:30	16:40	CON	T-23	12:58:29	12:58:31	SSI	
8/20/2013	47.75171	122.72572	7:30	16:40	CON	T-24	13:15:39	13:21:52	I	
8/20/2013	47.75171	122.72572	7:30	16:40	CON	R-23	13:38:03	13:46:53	I	
8/20/2013	47.75171	122.72572	7:30	16:40	CON	R-24	13:58:56	14:11:55	I	
8/20/2013	47.75171	122.72572	7:30	16:40	CON	M-23	14:27:21	14:35:44	I	
8/20/2013	47.75171	122.72572	7:30	16:40	CON	M-24	14:50:25	14:57:10	I	

Date	Latitude	Longitude	Time Effort Initiated	Time Effort Completed	Event Code	Pile	Start Time	End Time	Const Type	Comments
8/20/2013	47.75171	122.72572	7:30	16:40	CON	J-23	15:11:07	15:18:13	I	
8/20/2013	47.75171	122.72572	7:30	16:40	CON	J-24	15:29:35	15:35:26	I	
8/20/2013	47.75256	122.72429	7:30	16:40	CON	BB-1	15:38:11	15:55:51	V	batter base pile
8/20/2013	47.75256	122.72429	7:30	16:40	CON	BB-1	15:58:13	16:05:59	V	batter base pile
8/20/2013	47.75256	122.72429	7:30	16:40	CON	BB-1	16:07:08	16:09:26	V	batter base pile
8/20/2013	47.75256	122.72429	7:30	16:40	CON	BB-1	16:09:44	16:10:19	V	batter base pile
8/20/2013	47.75171	122.72572	7:30	16:40	POST		16:10:00	16:40:00	NONE	
8/21/2013	47.7515	122.72464	8:21	16:42	CON	X-22	8:37:36	8:38:13	V	48"
8/21/2013	47.7515	122.72464	8:21	16:42	CON	X-22	8:42:11	8:44:00	V	
8/21/2013	47.7515	122.72464	8:21	16:42	CON	X-22	8:55:06	8:55:30	V	
8/21/2013	47.7515	122.72464	8:21	16:42	CON	X-22	8:56:49	8:58:11	V	Out to move
8/21/2013	47.7515	122.72464	8:21	16:42	CON	X-22	9:45:29	9:45:50	V	in
8/21/2013	47.7515	122.72464	8:21	16:42	CON	X-22	9:46:20	9:52:22	V	end
8/21/2013	47.7515	122.72464	8:21	16:42	CON	J-23	9:53:35	9:53:37	SSI	
8/21/2013	47.7515	122.72464	8:21	16:42	CON	J-23	9:54:38	9:54:41	SSI	
8/21/2013	47.7515	122.72464	8:21	16:42	CON	J-23	9:55:32	9:55:34	SSI	
8/21/2013	47.7515	122.72464	8:21	16:42	CON	J-23	9:56:27	9:56:29	I	
8/21/2013	47.7515	122.72464	8:21	16:42	CON	J-23	9:57:28	9:58:27	I	warm up for indicar
8/21/2013	47.7515	122.72464	8:21	16:42	CON	V-22	10:58:54	10:59:20	V	48"
8/21/2013	47.7515	122.72464	8:21	16:42	CON	V-22	11:04:08	11:06:02	V	
8/21/2013	47.7515	122.72464	8:21	16:42	CON	V-22	11:08:21	11:08:47	V	
8/21/2013	47.7515	122.72464	8:21	16:42	CON	V-22	11:09:57	11:10:47	V	
8/21/2013	47.7515	122.72464	8:21	16:42	CON	V-22	11:11:17	11:13:11	V	
8/21/2013	47.7515	122.72464	8:21	16:42	CON	B-24	11:17:26	11:17:28	SSI	Indicator pile
8/21/2013	47.7515	122.72464	8:21	16:42	CON	B-24	11:18:15	11:18:17	SSI	Indicator pile
8/21/2013	47.7515	122.72464	8:21	16:42	CON	B-24	11:19:14	11:19:15	SSI	Indicator pile
8/21/2013	47.7515	122.72464	8:21	16:42	CON	B-24	11:19:59	11:22:01	I	Indicator pile
8/21/2013	47.7515	122.72464	8:21	16:42	CON	B-24	11:27:02	11:28:57	I	Indicator pile
8/21/2013	47.7515	122.72464	8:21	16:42	CON	B-24	11:35:25	11:37:35	I	Indicator pile
8/21/2013	47.7515	122.72464	8:21	16:42	CON	T-22	11:51:59	11:54:30	V	48"
8/21/2013	47.7515	122.72464	8:21	16:42	CON	T-22	11:55:07	11:57:27	V	
8/21/2013	47.7515	122.72464	8:21	16:42	CON	R-22	14:12:05	14:14:31	V	48"
8/21/2013	47.7515	122.72464	8:21	16:42	CON	R-22	14:15:20	14:16:57	V	
8/21/2013	47.7515	122.72464	8:21	16:42	CON	R-22	14:17:26	14:17:54	V	
8/21/2013	47.7515	122.72464	8:21	16:42	CON	R-22	14:19:28	14:22:25	V	
8/21/2013	47.7515	122.72464	8:21	16:42	CON	M-22	15:08:50	15:18:21	V	48"
8/21/2013	47.7515	122.72464	8:21	16:42	CON	J-22	15:54:02	16:10:19	V	48"
8/21/2013	47.7515	122.72464	8:21	16:42	POST		16:11:37	16:43:12	NONE	
8/21/2013	47.7515	122.72464	8:21	16:42	PRE		16:12:00	16:42:00	NONE	
8/22/2013	47.752	122.72552	7:00	16:40	PRE		7:00:00	7:15:34	NONE	

Date	Latitude	Longitude	Time Effort Initiated	Time Effort Completed	Event Code	Pile	Start Time	End Time	Const Type	Comments
8/22/2013	47.752	122.72552	7:00	16:40	CON	X-21	8:08:57	8:11:01	V	48"
8/22/2013	47.752	122.72552	7:00	16:40	CON	X-21	8:12:00	8:17:28	V	
8/22/2013	47.752	122.72552	7:00	16:40	CON	V-21	8:48:44	8:50:08	V	48"
8/22/2013	47.752	122.72552	7:00	16:40	CON	V-21	8:51:54	8:52:49	V	
8/22/2013	47.752	122.72552	7:00	16:40	CON	V-21	8:55:03	8:55:37	V	
8/22/2013	47.752	122.72552	7:00	16:40	CON	V-21	8:56:29	8:56:54	V	
8/22/2013	47.752	122.72552	7:00	16:40	CON	V-21	9:00:41	9:01:59	V	
8/22/2013	47.752	122.72552	7:00	16:40	CON	V-21	9:04:09	9:04:56	V	
8/22/2013	47.752	122.72552	7:00	16:40	CON	T-21	9:41:09	9:41:45	V	48"
8/22/2013	47.752	122.72552	7:00	16:40	CON	T-21	9:42:52	9:43:23	V	
8/22/2013	47.752	122.72552	7:00	16:40	CON	T-21	9:45:42	9:45:53	V	
8/22/2013	47.752	122.72552	7:00	16:40	CON	T-21	9:47:23	9:48:01	V	
8/22/2013	47.752	122.72552	7:00	16:40	CON	T-21	9:48:38	9:51:01	V	
8/22/2013	47.752	122.72552	7:00	16:40	CON	T-21	9:57:13	9:57:52	V	
8/22/2013	47.752	122.72552	7:00	16:40	CON	T-21	10:02:17	10:03:34	V	
8/22/2013	47.752	122.72552	7:00	16:40	CON	T-21	10:04:33	10:04:59	V	
8/22/2013	47.752	122.72552	7:00	16:40	CON	V-21	11:03:37	11:04:39	V	48"
8/22/2013	47.752	122.72552	7:00	16:40	CON	V-21	11:05:41	11:10:05	V	
8/22/2013	47.752	122.72552	7:00	16:40	CON	M-21	11:49:11	11:52:39	V	48"
8/22/2013	47.752	122.72552	7:00	16:40	CON	M-21	11:53:38	11:56:18	V	
8/22/2013	47.752	122.72552	7:00	16:40	CON	J-21	12:29:32	12:33:50	V	48"
8/22/2013	47.752	122.72552	7:00	16:40	CON	J-21	12:36:23	12:39:06	V	
8/22/2013	47.752	122.72552	7:00	16:40	CON	X-20	14:34:14	14:36:54	V	48"
8/22/2013	47.752	122.72552	7:00	16:40	CON	X-20	14:38:27	14:41:03	V	
8/22/2013	47.752	122.72552	7:00	16:40	CON	V-20	15:17:18	15:18:32	V	48"
8/22/2013	47.752	122.72552	7:00	16:40	CON	V-20	15:19:24	15:20:51	V	
8/22/2013	47.752	122.72552	7:00	16:40	CON	V-20	15:26:46	15:28:02	V	
8/22/2013	47.752	122.72552	7:00	16:40	CON	T-20	16:01:02	16:02:32	V	48"
8/22/2013	47.752	122.72552	7:00	16:40	CON	T-20	16:03:06	16:04:01	V	
8/22/2013	47.752	122.72552	7:00	16:40	CON	T-20	16:04:41	16:05:07	V	
8/22/2013	47.752	122.72552	7:00	16:40	CON	T-20	16:07:19	16:09:07	V	
8/22/2013	47.752	122.72552	7:00	16:40	POST		16:09:10	16:40:00	NONE	
8/26/2013	47.752	122.72552	7:20	17:23	PRE		7:20:00	7:50:00	NONE	
8/26/2013	47.752	122.72552	7:20	17:23	CON	V-22	11:31:25	11:31:30	SSI	
8/26/2013	47.752	122.72552	7:20	17:23	CON	V-22	11:32:41	11:32:42	SSI	
8/26/2013	47.752	122.72552	7:20	17:23	CON	V-22	11:33:43	11:33:44	SSI	
8/26/2013	47.752	122.72552	7:20	17:23	CON	V-22	11:34:56	11:34:58	I	
8/26/2013	47.752	122.72552	7:20	17:23	CON	V-22	11:35:50	11:35:51	I	
8/26/2013	47.752	122.72552	7:20	17:23	CON	V-22	11:36:54	11:36:57	I	
8/26/2013	47.752	122.72552	7:20	17:23	CON	V-22	11:37:59	11:45:50	I	

Date	Latitude	Longitude	Time Effort Initiated	Time Effort Completed	Event Code	Pile	Start Time	End Time	Const Type	Comments
8/26/2013	47.752	122.72552	7:20	17:23	CON	X-22	12:59:26	12:59:41	SSI	
8/26/2013	47.752	122.72552	7:20	17:23	CON	X-22	12:59:38	13:00:35	SSI	
8/26/2013	47.752	122.72552	7:20	17:23	CON	X-22	13:01:43	13:01:44	SSI	
8/26/2013	47.752	122.72552	7:20	17:23	CON	X-22	13:03:11	13:06:26	I	
8/26/2013	47.752	122.72552	7:20	17:23	CON	X-21	13:29:54	13:43:31	I	
8/26/2013	47.752	122.72552	7:20	17:23	CON	V-21	14:00:50	14:08:59	I	
8/26/2013	47.752	122.72552	7:20	17:23	CON	T-21	14:22:56	14:25:47	I	
8/26/2013	47.752	122.72552	7:20	17:23	CON	T-22	14:37:21	14:40:02	I	
8/26/2013	47.752	122.72552	7:20	17:23	CON	R-21	14:54:15	14:58:17	I	
8/26/2013	47.752	122.72552	7:20	17:23	CON	R-22	15:18:22	15:23:33	I	
8/26/2013	47.752	122.72552	7:20	17:23	CON	M-21	15:45:18	15:50:35	I	
8/26/2013	47.752	122.72552	7:20	17:23	CON	M-22	16:07:36	16:13:56	I	
8/26/2013	47.752	122.72552	7:20	17:23	CON	J-21	16:25:30	16:33:58	I	
8/26/2013	47.752	122.72552	7:20	17:23	CON	J-22	16:49:37	16:52:57	I	
8/26/2013	47.752	122.72552	7:20	17:23	POST		16:53:15	17:23:17	NONE	
8/27/2013	47.752	122.72552	7:20	14:55	PRE		7:20:54	7:35:52	NONE	
8/27/2013	47.752	122.72552	7:20	14:55	CON	R-20	8:46:55	8:49:37	V	48"
8/27/2013	47.752	122.72552	7:20	14:55	CON	R-20	8:50:25	8:52:40	V	
8/27/2013	47.752	122.72552	7:20	14:55	CON	M-20	9:27:16	9:34:11	V	48"
8/27/2013	47.752	122.72552	7:20	14:55	CON	J-20	10:31:51	10:36:14	V	48"
8/27/2013	47.752	122.72552	7:20	14:55	CON	J-20	10:36:52	10:38:12	V	
8/27/2013	47.752	122.72552	7:20	14:55	CON	J-20	10:39:42	10:43:20	V	
8/27/2013	47.752	122.72552	7:20	14:55	CON	X-19	11:41:29	11:42:46	V	48"
8/27/2013	47.752	122.72552	7:20	14:55	CON	X-19	11:43:28	11:44:38	V	
8/27/2013	47.752	122.72552	7:20	14:55	CON	X-19	11:45:20	11:45:55	V	
8/27/2013	47.752	122.72552	7:20	14:55	CON	X-19	11:50:31	11:51:43	V	
8/27/2013	47.752	122.72552	7:20	14:55	CON	X-19	11:58:30	12:00:17	V	
8/27/2013	47.752	122.72552	7:20	14:55	CON	V-19	13:30:41	13:34:18	V	48"
8/27/2013	47.752	122.72552	7:20	14:55	CON	T-19	14:06:27	14:09:01	V	48"
8/27/2013	47.752	122.72552	7:20	14:55	CON	T-19	14:09:23	14:10:08	V	
8/27/2013	47.752	122.72552	7:20	14:55	CON	T-19	14:14:26	14:14:42	V	
8/27/2013	47.752	122.72552	7:20	14:55	CON	T-19	14:15:31	14:16:30	V	
8/27/2013	47.752	122.72552	7:20	14:55	POST		14:16:53	14:46:15	NONE	
8/28/2013	47.752	122.72552	8:00	16:47	PRE		8:00:00	8:30:00	NONE	
8/28/2013	47.752	122.72552	8:00	16:47	CON	V-22	8:47:53	8:47:55	SSI	
8/28/2013	47.752	122.72552	8:00	16:47	CON	V-22	8:48:43	8:48:45	SSI	
8/28/2013	47.752	122.72552	8:00	16:47	CON	V-22	8:49:56	8:49:58	SSI	
8/28/2013	47.752	122.72552	8:00	16:47	CON	V-22	8:51:05	8:52:21	I	
8/28/2013	47.752	122.72552	8:00	16:47	CON	V-22	8:56:59	9:06:22	I	
8/28/2013	47.752	122.72552	8:00	16:47	CON	X-20	10:30:09	10:30:10	SSI	

Date	Latitude	Longitude	Time Effort Initiated	Time Effort Completed	Event Code	Pile	Start Time	End Time	Const Type	Comments
8/28/2013	47.752	122.72552	8:00	16:47	CON	X-20	10:31:07	10:31:09	SSI	
8/28/2013	47.752	122.72552	8:00	16:47	CON	X-20	10:32:07	10:32:09	SSI	
8/28/2013	47.752	122.72552	8:00	16:47	CON	X-20	10:32:53	10:44:19	I	
8/28/2013	47.752	122.72552	8:00	16:47	CON	X-20	10:46:15	10:47:25	I	
8/28/2013	47.752	122.72552	8:00	16:47	CON	V-20	11:04:42	11:13:39	I	
8/28/2013	47.752	122.72552	8:00	16:47	CON	X-19	11:30:12	11:40:52	I	
8/28/2013	47.752	122.72552	8:00	16:47	CON	V-19	11:52:30	12:03:27	I	
8/28/2013	47.752	122.72552	8:00	16:47	CON	T-19	13:12:29	13:12:35	SSI	
8/28/2013	47.752	122.72552	8:00	16:47	CON	T-19	13:13:59	13:14:02	SSI	
8/28/2013	47.752	122.72552	8:00	16:47	CON	T-19	13:15:34	13:15:37	SSI	
8/28/2013	47.752	122.72552	8:00	16:47	CON	T-19	13:16:44	13:28:20	I	
8/28/2013	47.752	122.72552	8:00	16:47	CON	T-20	14:59:21	14:59:23	SSI	
8/28/2013	47.752	122.72552	8:00	16:47	CON	T-20	15:00:20	15:00:24	SSI	
8/28/2013	47.752	122.72552	8:00	16:47	CON	T-20	15:01:19	15:01:22	SSI	
8/28/2013	47.752	122.72552	8:00	16:47	CON	T-20	15:02:19	15:08:19	I	
8/28/2013	47.752	122.72552	8:00	16:47	CON	R-20	15:18:46	15:26:52	I	
8/28/2013	47.752	122.72552	8:00	16:47	CON	M-20	15:43:13	15:49:27	I	
8/28/2013	47.752	122.72552	8:00	16:47	CON	J-20	16:09:29	16:16:18	I	
8/28/2013	47.752	122.72552	8:00	16:47	POST		16:17:00	16:47:00	NONE	
8/29/2013	47.75135	122.72517	8:00	16:37	PRE		8:00:48	8:15:54	NONE	
8/29/2013	47.75135	122.72517	8:00	16:37	CON	R-19	9:03:12	9:06:06	V	
8/29/2013	47.75135	122.72517	8:00	16:37	CON	R-19	9:06:33	9:08:58	V	
8/29/2013	47.75135	122.72517	8:00	16:37	CON	M-19	10:24:40	10:25:16	V	
8/29/2013	47.75135	122.72517	8:00	16:37	CON	M-19	10:25:47	10:28:13	V	
8/29/2013	47.75135	122.72517	8:00	16:37	CON	M-19	10:29:04	10:30:58	V	
8/29/2013	47.75135	122.72517	8:00	16:37	CON	J-19	11:37:13	11:43:12	V	
8/29/2013	47.75135	122.72517	8:00	16:37	CON	X-18	12:30:20	12:31:00	V	
8/29/2013	47.75135	122.72517	8:00	16:37	CON	X-18	12:31:48	12:33:28	V	
8/29/2013	47.75135	122.72517	8:00	16:37	CON	X-18	12:35:35	12:36:05	V	
8/29/2013	47.75135	122.72517	8:00	16:37	CON	X-18	12:39:08	12:39:49	V	
8/29/2013	47.75135	122.72517	8:00	16:37	CON	V-18	14:02:35	14:04:36	V	
8/29/2013	47.75135	122.72517	8:00	16:37	CON	V-18	14:05:42	14:06:15	V	
8/29/2013	47.75135	122.72517	8:00	16:37	CON	V-18	14:07:45	14:08:12	V	
8/29/2013	47.75135	122.72517	8:00	16:37	CON	T-18	14:43:56	14:44:22	V	
8/29/2013	47.75135	122.72517	8:00	16:37	CON	T-18	14:53:14	14:53:59	V	
8/29/2013	47.75135	122.72517	8:00	16:37	CON	T-18	14:55:58	14:56:50	V	
8/29/2013	47.75135	122.72517	8:00	16:37	CON	T-18	15:01:45	15:02:33	V	
8/29/2013	47.75135	122.72517	8:00	16:37	CON	T-18	15:03:59	15:04:00	V	
8/29/2013	47.75135	122.72517	8:00	16:37	CON	T-18	15:04:39	15:05:27	V	
8/29/2013	47.75135	122.72517	8:00	16:37	CON	T-18	15:08:33	15:09:04	V	

Date	Latitude	Longitude	Time Effort Initiated	Time Effort Completed	Event Code	Pile	Start Time	End Time	Const Type	Comments
8/29/2013	47.75135	122.72517	8:00	16:37	CON	R-18	15:48:52	15:49:23	V	
8/29/2013	47.75135	122.72517	8:00	16:37	CON	R-18	15:51:46	15:52:58	V	
8/29/2013	47.75135	122.72517	8:00	16:37	CON	R-18	15:54:22	15:55:13	V	
8/29/2013	47.75135	122.72517	8:00	16:37	CON	R-18	15:59:40	16:00:08	V	
8/29/2013	47.75135	122.72517	8:00	16:37	CON	R-18	16:00:55	16:02:23	V	
8/29/2013	47.75135	122.72517	8:00	16:37	CON	R-18	16:06:35	16:06:56	V	
8/29/2013	47.75135	122.72517	8:00	16:37	POST		16:07:43	16:47:09	NONE	
8/30/2013	47.75208	122.72427	7:48	15:53	PRE		8:50:00	9:05:40	NONE	
8/30/2013	47.75208	122.72427	7:48	15:53	CON	T24-D	10:28:23	10:28:25	SSI	
8/30/2013	47.75208	122.72427	7:48	15:53	CON	T24-D	10:29:17	10:29:19	SSI	
8/30/2013	47.75208	122.72427	7:48	15:53	CON	T24-D	10:30:08	10:30:10	SSI	
8/30/2013	47.75208	122.72427	7:48	15:53	CON	T24-D	10:30:59	10:31:04	I	
8/30/2013	47.75208	122.72427	7:48	15:53	CON	T24-D	10:32:08	10:32:10	I	
8/30/2013	47.75208	122.72427	7:48	15:53	CON	T24-D	10:32:59	10:34:13	I	
8/30/2013	47.75208	122.72427	7:48	15:53	CON	T24-C	10:48:39	10:48:59	I	
8/30/2013	47.75208	122.72427	7:48	15:53	CON	T24-C	10:51:19	10:51:55	I	
8/30/2013	47.75208	122.72427	7:48	15:53	CON	T24-C	10:55:53	10:56:28	I	
8/30/2013	47.75208	122.72427	7:48	15:53	CON	T23-C	11:14:00	11:14:29	I	
8/30/2013	47.75208	122.72427	7:48	15:53	CON	T23-C	11:16:25	11:16:52	I	
8/30/2013	47.75208	122.72427	7:48	15:53	CON	T25-C	11:35:19	11:35:57	I	
8/30/2013	47.75208	122.72427	7:48	15:53	CON	T25-C	11:38:08	11:38:44	I	
8/30/2013	47.75208	122.72427	7:48	15:53	CON	T26-D	12:06:49	12:07:21	I	
8/30/2013	47.75208	122.72427	7:48	15:53	CON	X.8-40	14:15:04	14:15:05	SSI	
8/30/2013	47.75208	122.72427	7:48	15:53	CON	X.8-40	14:15:49	14:15:50	SSI	
8/30/2013	47.75208	122.72427	7:48	15:53	CON	X.8-40	14:16:30	14:16:31	SSI	
8/30/2013	47.75208	122.72427	7:48	15:53	CON	X.8-40	14:17:16	14:20:07	I	
8/30/2013	47.75208	122.72427	7:48	15:53	CON	X.8-40	14:24:48	14:25:19	I	
8/30/2013	47.75208	122.72427	7:48	15:53	CON	X.8-40	14:27:57	14:28:36	I	
8/30/2013	47.75208	122.72427	7:48	15:53	CON	W-40	14:50:12	14:53:09	I	
8/30/2013	47.75208	122.72427	7:48	15:53	CON	W-40	14:56:28	14:57:04	I	
8/30/2013	47.75208	122.72427	7:48	15:53	CON	V.1-39	15:13:58	15:15:52	I	
8/30/2013	47.75208	122.72427	7:48	15:53	CON	V.1-39	15:22:20	15:22:50	I	
8/30/2013	47.75208	122.72427	7:48	15:53	POST		15:23:00	15:53:01	NONE	
9/3/2013			8:56	16:27	PRE		8:56:00	9:24:00	NONE	
9/3/2013			8:56	16:27	CON	T.8-40	11:10:42	11:10:46	SSI	SS1
9/3/2013			8:56	16:27	CON	T.8-40	11:11:50	11:11:51	SSI	SS2
9/3/2013			8:56	16:27	CON	T.8-40	11:13:14	11:13:15	SSI	SS3
9/3/2013			8:56	16:27	CON	T.8-40	11:13:56	11:28:41	I	
9/3/2013			8:56	16:27	CON	T.8-40	11:32:50	11:33:18	I	
9/3/2013			8:56	16:27	CON	T.1-40	12:39:31	12:39:35	SSI	SS1

Date	Latitude	Longitude	Time Effort Initiated	Time Effort Completed	Event Code	Pile	Start Time	End Time	Const Type	Comments
9/3/2013			8:56	16:27	CON	T.1-40	12:40:38	12:40:42	SSI	SS2
9/3/2013			8:56	16:27	CON	T.1-40	12:41:49	12:41:53	SSI	SS3
9/3/2013			8:56	16:27	CON	T.1-40	12:42:49	12:58:27	I	
9/3/2013			8:56	16:27	CON	T.1-40	13:00:25	13:00:47	I	
9/3/2013			8:56	16:27	CON	T.1-40	13:03:18	13:03:51	I	
9/3/2013			8:56	16:27	CON	T.5-39	13:30:00	13:30:17	I	
9/3/2013			8:56	16:27	CON	T.5-39	13:31:58	13:35:46	I	
9/3/2013			8:56	16:27	CON	S-39	13:54:23	14:14:30	I	
9/3/2013			8:56	16:27	CON	R.2-39	14:27:22	14:42:46	I	
9/3/2013			8:56	16:27	CON	R.2-39	14:46:27	14:47:13	I	
9/3/2013			8:56	16:27	CON	R.2-39	14:48:41	14:48:53	I	
9/3/2013			8:56	16:27	CON	S-38	15:08:58	15:11:09	I	
9/3/2013			8:56	16:27	CON	R.2-38	15:40:56	15:41:52	I	
9/3/2013			8:56	16:27	CON	R.2-38	15:45:39	15:48:28	I	
9/3/2013			8:56	16:27	CON	R.2-38	15:52:51	15:54:27	I	
9/3/2013			8:56	16:27	CON	R.2-38	15:56:16	15:56:28	I	
9/3/2013			8:56	16:27	POST		15:56:29	16:27:51	NONE	
9/4/2013	47.75248	122.72449	7:50	16:22	PRE		7:50:02	8:05:07	NONE	
9/4/2013	47.75248	122.72449	7:50	16:22	CON	M-18	8:38:30	8:40:18	V	
9/4/2013	47.75248	122.72449	7:50	16:22	CON	M-18	8:41:09	8:41:57	V	
9/4/2013	47.75248	122.72449	7:50	16:22	CON	M-18	8:42:36	8:43:41	V	
9/4/2013	47.75248	122.72449	7:50	16:22	CON	J-18	10:02:11	10:02:38	V	
9/4/2013	47.75248	122.72449	7:50	16:22	CON	J-18	10:03:49	10:05:38	V	
9/4/2013	47.75248	122.72449	7:50	16:22	CON	J-18	10:06:39	10:09:08	V	
9/4/2013	47.75248	122.72449	7:50	16:22	CON	J-18	10:09:55	10:10:30	V	
9/4/2013	47.75248	122.72449	7:50	16:22	CON	X-17	12:02:57	12:06:34	V	
9/4/2013	47.75248	122.72449	7:50	16:22	CON	X-17	12:07:01	12:08:01	V	
9/4/2013	47.75248	122.72449	7:50	16:22	CON	X-17	12:09:51	12:10:07	V	
9/4/2013	47.75248	122.72449	7:50	16:22	CON	V-17	13:27:03	13:29:15	V	
9/4/2013	47.75248	122.72449	7:50	16:22	CON	V-17	13:31:41	13:32:05	V	
9/4/2013	47.75248	122.72449	7:50	16:22	CON	V-17	13:32:52	13:33:20	V	
9/4/2013	47.75248	122.72449	7:50	16:22	CON	V-17	13:34:24	13:34:55	V	
9/4/2013	47.75248	122.72449	7:50	16:22	CON	T-17	14:19:45	14:23:12	V	
9/4/2013	47.75248	122.72449	7:50	16:22	CON	T-17	14:32:40	14:33:32	V	
9/4/2013	47.75248	122.72449	7:50	16:22	CON	T-17	14:39:38	14:39:57	V	
9/4/2013	47.75248	122.72449	7:50	16:22	CON	T-17	14:42:27	14:43:01	V	
9/4/2013	47.75248	122.72449	7:50	16:22	CON	T-17	14:49:53	14:54:06	V	
9/4/2013	47.75248	122.72449	7:50	16:22	CON	T-17	15:00:19	15:00:48	V	
9/4/2013	47.75248	122.72449	7:50	16:22	CON	T-17	15:02:22	15:03:35	V	
9/4/2013	47.75248	122.72449	7:50	16:22	CON	T-17	15:04:18	15:06:34	V	

Date	Latitude	Longitude	Time Effort Initiated	Time Effort Completed	Event Code	Pile	Start Time	End Time	Const Type	Comments
9/4/2013	47.75248	122.72449	7:50	16:22	CON	T-17	15:09:20	15:09:50	V	
9/4/2013	47.75248	122.72449	7:50	16:22	CON	R-17	15:47:05	15:50:46	V	
9/4/2013	47.75248	122.72449	7:50	16:22	CON	R-17	15:51:43	15:52:59	V	
9/4/2013	47.75248	122.72449	7:50	16:22	POST		15:52:59	16:22:33	NONE	
9/5/2013	47.75119	122.72516	8:35	17:47	PRE		8:35:00	9:05:00	NONE	
9/5/2013	47.75119	122.72516	8:35	17:47	CON	X-17	9:08:15	9:08:16	SSI	
9/5/2013	47.75119	122.72516	8:35	17:47	CON	X-17	9:09:21	9:09:23	SSI	
9/5/2013	47.75119	122.72516	8:35	17:47	CON	X-17	9:10:24	9:10:28	SSI	
9/5/2013	47.75119	122.72516	8:35	17:47	CON	X-17	9:11:28	9:19:58	I	
9/5/2013	47.75119	122.72516	8:35	17:47	CON	X-18	10:50:34	10:50:35	SSI	
9/5/2013	47.75119	122.72516	8:35	17:47	CON	X-18	10:51:39	10:51:40	SSI	
9/5/2013	47.75119	122.72516	8:35	17:47	CON	X-18	10:52:39	10:52:41	SSI	
9/5/2013	47.75119	122.72516	8:35	17:47	CON	X-18	10:53:47	10:58:09	I	
9/5/2013	47.75119	122.72516	8:35	17:47	CON	X-18	11:02:34	11:08:03	I	
9/5/2013	47.75119	122.72516	8:35	17:47	CON	V-17	11:25:15	11:47:09	I	
9/5/2013	47.75119	122.72516	8:35	17:47	CON	V-18	12:43:54	12:43:56	SSI	
9/5/2013	47.75119	122.72516	8:35	17:47	CON	V-18	12:44:53	12:44:56	SSI	
9/5/2013	47.75119	122.72516	8:35	17:47	CON	V-18	12:45:53	12:45:57	SSI	
9/5/2013	47.75119	122.72516	8:35	17:47	CON	V-18	12:46:52	13:01:07	I	
9/5/2013	47.75119	122.72516	8:35	17:47	CON	V-17	13:09:00	13:22:04	I	
9/5/2013	47.75119	122.72516	8:35	17:47	CON	V-17	13:23:54	13:24:44	I	
9/5/2013	47.75119	122.72516	8:35	17:47	CON	J-19	13:54:34	14:05:06	I	
9/5/2013	47.75119	122.72516	8:35	17:47	CON	J-19	14:10:58	14:14:24	I	
9/5/2013	47.75119	122.72516	8:35	17:47	CON	M-19	14:27:48	14:34:38	I	
9/5/2013	47.75119	122.72516	8:35	17:47	CON	M-19	14:36:57	14:38:10	I	
9/5/2013	47.75119	122.72516	8:35	17:47	CON	R-19	14:51:18	14:55:17	I	
9/5/2013	47.75119	122.72516	8:35	17:47	CON	R-19	14:58:08	15:01:33	I	
9/5/2013	47.75119	122.72516	8:35	17:47	CON	J-18	15:23:02	15:41:30	I	
9/5/2013	47.75119	122.72516	8:35	17:47	CON	M-18	15:41:24	15:54:31	I	
9/5/2013	47.75119	122.72516	8:35	17:47	CON	T-18	16:06:14	16:12:07	I	
9/5/2013	47.75119	122.72516	8:35	17:47	CON	T-18	16:37:00	16:41:31	I	
9/5/2013	47.75119	122.72516	8:35	17:47	CON	R-18	16:58:34	17:06:29	I	
9/5/2013	47.75119	122.72516	8:35	17:47	CON	R-18	17:14:13	17:17:00	I	
9/5/2013	47.75119	122.72516	8:35	17:47	POST		17:17:00	17:47:00	NONE	
9/6/2013	47.75105	122.72476	7:35	16:54	PRE		7:35:44	7:54:53	NONE	
9/6/2013	47.75105	122.72476	7:35	16:54	CON	M-17	8:32:36	8:33:10	V	48"
9/6/2013	47.75105	122.72476	7:35	16:54	CON	M-17	8:33:42	8:35:08	V	
9/6/2013	47.75105	122.72476	7:35	16:54	CON	M-17	8:35:54	8:37:02	V	
9/6/2013	47.75105	122.72476	7:35	16:54	CON	J-17	9:28:02	9:28:33	V	48"
9/6/2013	47.75105	122.72476	7:35	16:54	CON	J-17	9:28:52	9:29:48	V	

Date	Latitude	Longitude	Time Effort Initiated	Time Effort Completed	Event Code	Pile	Start Time	End Time	Const Type	Comments
9/6/2013	47.75105	122.72476	7:35	16:54	CON	J-17	9:32:08	9:32:58	V	
9/6/2013	47.75105	122.72476	7:35	16:54	CON	J-17	9:35:34	9:36:14	V	
9/6/2013	47.75105	122.72476	7:35	16:54	CON	J-17	9:37:19	9:38:52	V	
9/6/2013	47.75105	122.72476	7:35	16:54	CON	J-17	9:39:59	9:40:24	V	
9/6/2013	47.75105	122.72476	7:35	16:54	CON	X-16	11:02:15	11:02:39	V	48"
9/6/2013	47.75105	122.72476	7:35	16:54	CON	X-16	11:03:25	11:04:21	V	
9/6/2013	47.75105	122.72476	7:35	16:54	CON	X-16	11:08:30	11:09:02	V	
9/6/2013	47.75105	122.72476	7:35	16:54	CON	X-16	11:14:00	11:14:21	V	
9/6/2013	47.75105	122.72476	7:35	16:54	CON	X-16	11:17:27	11:17:58	V	
9/6/2013	47.75105	122.72476	7:35	16:54	CON	X-16	11:20:42	11:21:23	V	
9/6/2013	47.75105	122.72476	7:35	16:54	CON	X-16	11:23:00	11:25:00	V	
9/6/2013	47.75105	122.72476	7:35	16:54	CON	V-16	12:00:03	12:03:45	V	48"
9/6/2013	47.75105	122.72476	7:35	16:54	CON	V-16	12:06:06	12:06:09	V	
9/6/2013	47.75105	122.72476	7:35	16:54	CON	V-16	12:06:48	12:08:24	V	
9/6/2013	47.75105	122.72476	7:35	16:54	CON	T-16	13:22:46	13:23:42	V	48"
9/6/2013	47.75105	122.72476	7:35	16:54	CON	T-16	13:24:12	13:26:51	V	
9/6/2013	47.75105	122.72476	7:35	16:54	CON	T-16	13:28:33	13:29:08	V	
9/6/2013	47.75105	122.72476	7:35	16:54	CON	R-16	14:50:01	14:53:33	V	48"
9/6/2013	47.75105	122.72476	7:35	16:54	CON	R-16	14:59:27	15:00:06	V	
9/6/2013	47.75105	122.72476	7:35	16:54	CON	M-16	15:34:16	15:38:01	V	48"
9/6/2013	47.75105	122.72476	7:35	16:54	CON	M-16	15:43:10	15:43:44	V	
9/6/2013	47.75105	122.72476	7:35	16:54	CON	J-16	16:17:20	16:20:19	V	48"
9/6/2013	47.75105	122.72476	7:35	16:54	CON	J-16	16:21:32	16:23:02	V	
9/6/2013	47.75105	122.72476	7:35	16:54	CON	J-16	16:24:00	16:24:43	V	
9/6/2013	47.75105	122.72476	7:35	16:54	POST		16:24:48	16:54:29	NONE	
9/9/2013	47.75105	122.72507	9:55	17:44	PRE		9:55:00	10:10:00	NONE	
9/9/2013	47.75105	122.72507	9:55	17:44	CON	X-15	10:22:22	10:22:54	V	
9/9/2013	47.75105	122.72507	9:55	17:44	CON	X-15	10:25:44	10:27:40	V	
9/9/2013	47.75105	122.72507	9:55	17:44	CON	X-15	10:28:17	10:29:12	V	
9/9/2013	47.75105	122.72507	9:55	17:44	CON	V-15	11:05:04	11:09:47	V	
9/9/2013	47.75105	122.72507	9:55	17:44	CON	T-15	11:49:26	11:53:40	V	
9/9/2013	47.75105	122.72507	9:55	17:44	CON	R-15	13:04:45	13:09:23	V	
9/9/2013	47.75105	122.72507	9:55	17:44	CON	M-15	13:47:26	13:50:08	V	
9/9/2013	47.75105	122.72507	9:55	17:44	CON	M-15	13:50:58	13:52:40	V	
9/9/2013	47.75105	122.72507	9:55	17:44	CON	J-15	14:24:13	14:29:40	V	
9/9/2013	47.75105	122.72507	9:55	17:44	CON	V.1W-6	16:50:43	17:14:16	V	
9/9/2013	47.75105	122.72507	9:55	17:44	POST		17:14:00	17:44:00	NONE	
9/10/2013			10:00	18:10	PRE		10:00:00	10:15:00	NONE	moving piles and barges
9/10/2013			10:00	18:10	CON	X-14	11:28:19	11:29:02	V	48"
9/10/2013			10:00	18:10	CON	X-14	11:31:03	11:32:03	V	

Date	Latitude	Longitude	Time Effort Initiated	Time Effort Completed	Event Code	Pile	Start Time	End Time	Const Type	Comments
9/10/2013			10:00	18:10	CON	X-14	11:33:22	11:35:30	V	
9/10/2013			10:00	18:10	CON	V-14	12:42:17	12:44:41	V	48"
9/10/2013			10:00	18:10	CON	V-14	12:46:38	12:47:57	V	
9/10/2013			10:00	18:10	CON	V-14	12:48:38	12:49:24	V	
9/10/2013	47.75354	122.72423	13:15	18:10	PRE		13:15:05	13:30:25	NONE	
9/10/2013			10:00	18:10	CON	T-14	14:31:50	14:36:50	V	
9/10/2013			10:00	18:10	CON	R-14	15:09:52	15:14:25	V	
9/10/2013			10:00	18:10	CON	M-14	16:01:16	16:06:05	V	
9/10/2013			10:00	18:10	CON	J-14	16:45:28	16:46:59	V	
9/10/2013			10:00	18:10	CON	J-14	16:47:57	16:52:42	V	
9/10/2013			10:00	18:10	POST		16:52:00	17:22:00	NONE	
9/11/2013	47.75091	122.72523	7:50	17:12	PRE		8:00:13	8:15:14	NONE	moving barges and sanicans
9/11/2013	47.75091	122.72523	7:50	17:12	CON	X-13	9:16:39	9:21:13	V	48"
9/11/2013	47.75091	122.72523	7:50	17:12	CON	V-13	10:26:27	10:29:10	V	48"
9/11/2013	47.75091	122.72523	7:50	17:12	CON	V-13	10:32:12	10:35:17	V	
9/11/2013			7:50	17:12	CON	V.1W-6	11:08:07	11:08:09	SSI	
9/11/2013			7:50	17:12	CON	V.1W-6	11:09:33	11:09:36	SSI	
9/11/2013			7:50	17:12	CON	V.1W-6	11:10:43	11:10:46	SSI	
9/11/2013			7:50	17:12	CON	V.1W-6	11:11:40	11:11:41	I	
9/11/2013			7:50	17:12	CON	V.1W-6	11:12:24	11:12:25	I	
9/11/2013			7:50	17:12	CON	V.1W-6	11:13:08	11:13:09	I	
9/11/2013			7:50	17:12	CON	V.1W-6	11:13:52	11:13:53	I	
9/11/2013			7:50	17:12	CON	V.1W-6	11:14:37	11:14:38	I	
9/11/2013			7:50	17:12	CON	V.1W-6	11:15:21	11:15:23	I	
9/11/2013			7:50	17:12	CON	V.1W-6	11:16:10	11:16:11	I	
9/11/2013			7:50	17:12	CON	V.1W-6	11:16:53	11:16:58	I	
9/11/2013			7:50	17:12	CON	V.1W-6	11:17:42	11:17:45	I	
9/11/2013			7:50	17:12	CON	V.1W-6	11:18:34	11:18:43	I	
9/11/2013			7:50	17:12	CON	V.1W-6	11:19:31	11:19:46	I	
9/11/2013			7:50	17:12	CON	V.1W-6	11:20:37	11:27:04	I	
9/11/2013			7:50	17:12	CON	V.1W-6	11:37:03	11:38:37	I	
9/11/2013	47.75091	122.72523	7:50	17:12	CON	T-13	13:20:59	13:25:04	V	48"
9/11/2013	47.75091	122.72523	7:50	17:12	CON	R-13	16:25:01	16:26:41	V	48"
9/11/2013	47.75091	122.72523	7:50	17:12	CON	R-13	16:27:14	16:28:48	V	
9/11/2013	47.75091	122.72523	7:50	17:12	CON	R-13	16:30:31	16:31:17	V	
9/11/2013	47.75091	122.72523	7:50	17:12	CON	R-13	16:33:52	16:35:07	V	
9/11/2013	47.75091	122.72523	7:50	17:12	CON	R-13	16:41:23	16:42:17	V	
9/11/2013	47.75091	122.72523	7:50	17:12	POST		16:42:19	17:12:00	NONE	
9/12/2013	47.75091	122.72523	8:00	17:06	PRE		8:00:00	8:15:00	NONE	
9/12/2013	47.75091	122.72523	8:00	17:06	CON	M-13	9:42:19	9:46:20	V	

Date	Latitude	Longitude	Time Effort Initiated	Time Effort Completed	Event Code	Pile	Start Time	End Time	Const Type	Comments
9/12/2013	47.75091	122.72523	8:00	17:06	CON	J-13	10:28:00	10:29:15	V	
9/12/2013			8:00	17:06	CON	V-23	10:29:42	10:29:49	SSI	48" re-strike
9/12/2013	47.75091	122.72523	8:00	17:06	CON	J-13	10:29:46	10:31:45	V	
9/12/2013			8:00	17:06	CON	V-23	10:30:48	10:31:06	SSI	
9/12/2013	47.75091	122.72523	8:00	17:06	CON	J-13	10:32:18	10:33:51	V	
9/12/2013			8:00	17:06	CON	V-23	10:35:05	10:35:10	SSI	
9/12/2013			8:00	17:06	CON	V-23	10:36:12	10:37:24	I	
9/12/2013			8:00	17:06	CON	V-24	10:57:06	10:59:04	I	48" re-strike
9/12/2013			8:00	17:06	CON	R-23	11:18:13	11:21:18	I	48" re-strike
9/12/2013			8:00	17:06	CON	R-23	11:26:23	11:30:43	I	
9/12/2013			8:00	17:06	CON	T-22	11:48:21	11:50:23	I	48" re-strike
9/12/2013			8:00	17:06	CON	T-22	11:53:52	11:56:16	I	
9/12/2013			8:00	17:06	CON	X-23	12:57:10	12:57:14	SSI	Warm up/soft start pile
9/12/2013			8:00	17:06	CON	X-23	12:58:20	12:58:23	SSI	
9/12/2013			8:00	17:06	CON	X-23	12:59:34	12:59:36	SSI	
9/12/2013	47.75091	122.72523	8:00	17:06	CON	X-12	13:04:11	13:06:41	V	
9/12/2013	47.75091	122.72523	8:00	17:06	CON	X-12	13:06:58	13:08:33	V	
9/12/2013			8:00	17:06	CON	X-22	13:23:15	13:24:37	I	48" re-strike
9/12/2013			8:00	17:06	CON	X-22	13:27:43	13:30:28	I	
9/12/2013	47.75091	122.72523	8:00	17:06	CON	V-12	13:46:17	13:48:17	V	
9/12/2013	47.75091	122.72523	8:00	17:06	CON	V-12	13:53:36	13:55:43	V	
9/12/2013			8:00	17:06	CON	X-21	13:59:41	14:05:23	I	48" re-strike
9/12/2013			8:00	17:06	CON	X-21	14:09:38	14:11:16	I	
9/12/2013			8:00	17:06	CON	V-21	14:33:27	14:36:29	I	48" re-strike
9/12/2013			8:00	17:06	CON	V-21	14:38:26	14:40:28	I	
9/12/2013	47.75091	122.72523	8:00	17:06	CON	T-12	14:49:12	14:49:44	V	
9/12/2013	47.75091	122.72523	8:00	17:06	CON	T-12	14:51:10	14:54:30	V	
9/12/2013	47.75091	122.72523	8:00	17:06	CON	R-12	15:36:47	15:39:24	V	
9/12/2013	47.75091	122.72523	8:00	17:06	CON	R-12	15:42:05	15:43:15	V	
9/12/2013			8:00	17:06	CON	M-12	16:32:12	16:36:17	V	48"
9/12/2013			8:00	17:06	POST		16:36:34	17:06:21	NONE	
9/13/2013	47.75343	122.72359	8:44	17:23	PRE		8:44:00	9:14:00	NONE	
9/13/2013	47.75343	122.72359	8:44	17:23	CON	V.1W-6	11:07:57	11:08:01	SSI	
9/13/2013	47.75343	122.72359	8:44	17:23	CON	V.1W-6	11:08:53	11:08:55	SSI	
9/13/2013	47.75343	122.72359	8:44	17:23	CON	V.1W-6	11:09:47	11:09:48	SSI	
9/13/2013	47.75343	122.72359	8:44	17:23	CON	V.1W-6	11:10:42	11:10:51	I	
9/13/2013	47.75343	122.72359	8:44	17:23	CON	V.1W-6	11:11:45	11:11:46	I	
9/13/2013	47.75343	122.72359	8:44	17:23	CON	V.1W-6	11:12:35	11:12:59	I	
9/13/2013	47.75343	122.72359	8:44	17:23	CON	R.4-40	14:05:06	14:05:07	SSI	
9/13/2013	47.75343	122.72359	8:44	17:23	CON	R.4-40	14:06:04	14:06:06	SSI	

Date	Latitude	Longitude	Time Effort Initiated	Time Effort Completed	Event Code	Pile	Start Time	End Time	Const Type	Comments
9/13/2013	47.75343	122.72359	8:44	17:23	CON	R.4-40	14:06:59	14:07:01	SSI	
9/13/2013	47.75343	122.72359	8:44	17:23	CON	R.4-40	14:07:55	14:08:43	I	
9/13/2013	47.75343	122.72359	8:44	17:23	CON	R.4-40	14:14:59	14:15:01	I	
9/13/2013	47.75343	122.72359	8:44	17:23	CON	R-38	14:38:55	14:38:57	I	
9/13/2013	47.75343	122.72359	8:44	17:23	CON	R-38	14:40:42	14:40:54	I	
9/13/2013	47.75343	122.72359	8:44	17:23	CON	R-38	14:49:46	14:50:12	I	
9/13/2013	47.75343	122.72359	8:44	17:23	CON	N-38	16:06:01	16:06:02	SSI	
9/13/2013	47.75343	122.72359	8:44	17:23	CON	N-38	16:07:08	16:07:11	SSI	
9/13/2013	47.75343	122.72359	8:44	17:23	CON	N-38	16:08:09	16:08:10	SSI	
9/13/2013	47.75343	122.72359	8:44	17:23	CON	N-38	16:09:12	16:20:40	I	
9/13/2013	47.75343	122.72359	8:44	17:23	CON	L-38	16:37:11	16:53:05	I	
9/13/2013	47.75343	122.72359	8:44	17:23	POST		16:53:12	17:23:19	NONE	
9/16/2013	47.75098	122.72496	9:04	16:27	PRE		9:04:55	9:34:01	NONE	
9/16/2013	47.75098	122.72496	9:04	16:27	CON	X-15	10:25:00	10:25:03	SSI	
9/16/2013	47.75098	122.72496	9:04	16:27	CON	X-15	10:26:11	10:26:13	SSI	
9/16/2013	47.75098	122.72496	9:04	16:27	CON	X-15	10:27:20	10:27:22	SSI	
9/16/2013	47.75098	122.72496	9:04	16:27	CON	X-15	10:28:21	10:49:38	I	
9/16/2013	47.75098	122.72496	9:04	16:27	CON	X-14	11:30:29	11:30:31	SSI	
9/16/2013	47.75098	122.72496	9:04	16:27	CON	X-14	11:31:36	11:31:37	SSI	
9/16/2013	47.75098	122.72496	9:04	16:27	CON	X-14	11:32:33	11:32:35	SSI	
9/16/2013	47.75098	122.72496	9:04	16:27	CON	X-14	11:33:36	11:39:07	I	
9/16/2013	47.75098	122.72496	9:04	16:27	CON	X-14	11:43:27	11:50:26	I	
9/16/2013	47.75098	122.72496	9:04	16:27	CON	X-13	12:45:13	12:45:15	SSI	
9/16/2013	47.75098	122.72496	9:04	16:27	CON	X-13	12:46:14	12:46:17	SSI	
9/16/2013	47.75098	122.72496	9:04	16:27	CON	X-13	12:47:15	12:47:17	SSI	
9/16/2013	47.75098	122.72496	9:04	16:27	CON	X-13	12:48:10	12:53:31	I	
9/16/2013	47.75098	122.72496	9:04	16:27	CON	X-13	12:57:28	13:04:39	I	
9/16/2013	47.75098	122.72496	9:04	16:27	CON	V-15	13:28:31	13:41:48	I	
9/16/2013	47.75098	122.72496	9:04	16:27	CON	V-14	14:17:09	14:17:11	SSI	
9/16/2013	47.75098	122.72496	9:04	16:27	CON	V-14	14:18:06	14:18:08	SSI	
9/16/2013	47.75098	122.72496	9:04	16:27	CON	V-14	14:19:08	14:19:10	SSI	
9/16/2013	47.75098	122.72496	9:04	16:27	CON	V-14	14:20:04	14:29:01	I	
9/16/2013	47.75098	122.72496	9:04	16:27	CON	V-14	14:34:15	14:37:48	I	
9/16/2013	47.75098	122.72496	9:04	16:27	CON	V-13	14:55:31	15:00:26	I	
9/16/2013	47.75098	122.72496	9:04	16:27	CON	V-13	15:04:58	15:14:50	I	
9/16/2013	47.75098	122.72496	9:04	16:27	CON	V-13	15:17:29	15:21:22	I	
9/16/2013	47.75098	122.72496	9:04	16:27	CON	V-12	15:40:44	15:56:29	I	
9/16/2013	47.75098	122.72496	9:04	16:27	POST		15:57:47	16:27:59	NONE	
9/17/2013	47.75075	122.72483	7:40	16:24	PRE		7:40:07	8:10:08	NONE	
9/17/2013	47.75075	122.72483	7:40	16:24	CON	X-12	9:59:50	9:59:51	SSI	SS1

Date	Latitude	Longitude	Time Effort Initiated	Time Effort Completed	Event Code	Pile	Start Time	End Time	Const Type	Comments
9/17/2013	47.75075	122.72483	7:40	16:24	CON	X-12	10:00:59	10:01:01	SSI	SS2
9/17/2013	47.75075	122.72483	7:40	16:24	CON	X-12	10:01:59	10:02:00	SSI	SS3
9/17/2013	47.75075	122.72483	7:40	16:24	CON	X-12	10:02:58	10:16:56	I	
9/17/2013	47.75075	122.72483	7:40	16:24	CON	T-12	10:35:55	10:56:31	I	
9/17/2013	47.75075	122.72483	7:40	16:24	CON	R-12	11:10:05	11:23:24	I	
9/17/2013	47.75075	122.72483	7:40	16:24	CON	M-12	11:38:59	11:52:01	I	
9/17/2013	47.75075	122.72483	7:40	16:24	CON	T-13	12:48:41	12:48:44	SSI	
9/17/2013	47.75075	122.72483	7:40	16:24	CON	T-13	12:49:49	12:49:51	SSI	
9/17/2013	47.75075	122.72483	7:40	16:24	CON	T-13	12:50:58	12:50:59	SSI	
9/17/2013	47.75075	122.72483	7:40	16:24	CON	T-13	12:52:03	13:01:02	I	
9/17/2013	47.75075	122.72483	7:40	16:24	CON	R-13	13:15:05	13:21:47	I	
9/17/2013	47.75075	122.72483	7:40	16:24	CON	R-13	13:33:57	13:38:10	I	
9/17/2013	47.75075	122.72483	7:40	16:24	CON	M-13	13:53:00	13:58:49	I	
9/17/2013	47.75075	122.72483	7:40	16:24	CON	J-13	14:13:33	14:23:12	I	
9/17/2013	47.75075	122.72483	7:40	16:24	CON	T-14	14:42:16	14:47:55	I	
9/17/2013	47.75075	122.72483	7:40	16:24	CON	T-15	15:01:55	15:16:53	I	
9/17/2013	47.75075	122.72483	7:40	16:24	CON	R-14	15:34:38	15:39:25	I	
9/17/2013	47.75075	122.72483	7:40	16:24	CON	R-14	15:42:20	15:44:23	I	
9/17/2013	47.75075	122.72483	7:40	16:24	POST		15:45:48	16:24:13	NONE	
9/18/2013	47.75085	122.72515	7:40	16:37	PRE		7:40:17	8:34:17	NONE	
9/18/2013	47.75085	122.72515	7:40	16:37	CON	J-12	8:54:51	8:55:25	V	48"
9/18/2013	47.75085	122.72515	7:40	16:37	CON	J-12	8:55:55	8:58:24	V	
9/18/2013	47.75085	122.72515	7:40	16:37	CON	J-12	8:59:45	9:00:35	V	
9/18/2013	47.75085	122.72515	7:40	16:37	CON	X-11	10:56:15	10:57:55	V	48"
9/18/2013	47.75085	122.72515	7:40	16:37	CON	X-11	10:58:38	11:00:25	V	
9/18/2013	47.75085	122.72515	7:40	16:37	CON	V-11	11:39:38	11:41:19	V	
9/18/2013	47.75085	122.72515	7:40	16:37	CON	V-11	11:41:41	11:42:41	V	
9/18/2013	47.75085	122.72515	7:40	16:37	CON	T-11	12:51:24	12:54:52	V	
9/18/2013	47.75085	122.72515	7:40	16:37	CON	R-11	13:27:38	13:31:40	V	
9/18/2013	47.75085	122.72515	7:40	16:37	CON	R-11	13:32:13	13:33:02	V	
9/18/2013	47.75085	122.72515	7:40	16:37	CON	M-11	14:13:31	14:15:37	V	
9/18/2013	47.75085	122.72515	7:40	16:37	CON	M-11	14:16:58	14:17:32	V	
9/18/2013	47.75085	122.72515	7:40	16:37	CON	M-11	14:18:07	14:18:51	V	
9/18/2013	47.75085	122.72515	7:40	16:37	CON	M-11	14:23:33	14:23:45	V	
9/18/2013	47.75085	122.72515	7:40	16:37	CON	M-11	14:24:26	14:24:44	V	
9/18/2013	47.75085	122.72515	7:40	16:37	CON	M-11	14:25:39	14:26:36	V	
9/18/2013	47.75085	122.72515	7:40	16:37	CON	J-11	15:06:25	15:08:24	V	48"
9/18/2013	47.75085	122.72515	7:40	16:37	CON	J-11	15:14:55	15:15:15	V	
9/18/2013	47.75085	122.72515	7:40	16:37	CON	J-11	15:17:42	15:18:13	V	
9/18/2013	47.75085	122.72515	7:40	16:37	CON	J-11	15:20:31	15:21:04	V	

Date	Latitude	Longitude	Time Effort Initiated	Time Effort Completed	Event Code	Pile	Start Time	End Time	Const Type	Comments
9/18/2013	47.75085	122.72515	7:40	16:37	CON	J-11	15:22:32	15:23:03	V	
9/18/2013	47.75085	122.72515	7:40	16:37	CON	J-11	15:23:26	15:24:30	V	
9/18/2013	47.75085	122.72515	7:40	16:37	POST		15:25:00	15:55:00	NONE	
9/19/2013			7:40	15:30	PRE		7:40:00	8:34:00	NONE	Thick fog delayed start
9/19/2013			7:40	15:30	CON	X-10	9:48:39	9:50:36	V	48"
9/19/2013			7:40	15:30	CON	X-10	9:54:15	9:54:33	V	
9/19/2013			7:40	15:30	CON	X-10	9:55:21	9:55:44	V	
9/19/2013			7:40	15:30	CON	X-10	9:56:26	9:57:09	V	
9/19/2013			7:40	15:30	CON	V-10	10:49:58	10:54:33	V	48"
9/19/2013			7:40	15:30	CON	V.1W-8	11:07:04	11:09:28	V	Batter pile
9/19/2013			7:40	15:30	CON	V.1W-8	11:17:08	11:25:03	V	Batter pile
9/19/2013			7:40	15:30	CON	T-10	11:24:45	11:28:42	V	48"
9/19/2013			7:40	15:30	CON	V.1W-8	11:25:10	11:40:57	V	Batter pile
9/19/2013			7:40	15:30	POST		23:30:00	12:00:00	NONE	
9/23/2013			8:25	16:48	PRE		8:25:51	8:55:02	NONE	
9/23/2013			8:25	16:48	CON	V.1W-8	10:02:12	10:02:14	SSI	
9/23/2013			8:25	16:48	CON	V.1W-8	10:03:01	10:03:02	SSI	
9/23/2013			8:25	16:48	CON	V.1W-8	10:03:50	10:03:51	SSI	
9/23/2013			8:25	16:48	CON	V.1W-8	10:04:42	10:04:44	I	
9/23/2013			8:25	16:48	CON	V.1W-8	10:05:31	10:05:32	I	
9/23/2013			8:25	16:48	CON	V.1W-8	10:06:20	10:06:21	I	
9/23/2013			8:25	16:48	CON	V.1W-8	10:07:08	10:07:09	I	
9/23/2013			8:25	16:48	CON	V.1W-8	10:07:58	10:08:12	I	
9/23/2013			8:25	16:48	CON	V.1W-8	10:09:02	10:09:03	I	
9/23/2013			8:25	16:48	CON	V.1W-8	10:09:51	10:09:52	I	
9/23/2013			8:25	16:48	CON	V.1W-8	10:10:43	10:25:01	I	
9/23/2013			8:25	16:48	CON	R-10	13:38:35	13:41:50	V	
9/23/2013			8:25	16:48	CON	R-10	13:43:57	13:44:46	V	
9/23/2013			8:25	16:48	CON	M-10	14:24:30	14:27:30	V	
9/23/2013			8:25	16:48	CON	M-10	14:28:26	14:29:06	V	
9/23/2013			8:25	16:48	CON	M-10	14:33:42	14:33:53	V	
9/23/2013			8:25	16:48	CON	M-10	14:34:20	14:34:39	V	
9/23/2013			8:25	16:48	CON	M-10	14:40:14	14:43:54	V	
9/23/2013			8:25	16:48	CON	M-10	14:48:27	14:52:26	V	
9/23/2013			8:25	16:48	CON	J-10	16:13:23	16:15:59	V	
9/23/2013			8:25	16:48	CON	J-10	16:17:02	16:18:58	V	
9/23/2013			8:25	16:48	POST		16:18:56	16:48:15	NONE	
9/24/2013	47.75042	122.72536	7:40	17:39	PRE		7:40:00	8:20:00	NONE	

Date	Latitude	Longitude	Time Effort Initiated	Time Effort Completed	Event Code	Pile	Start Time	End Time	Const Type	Comments
9/24/2013	47.75042	122.72536	7:40	17:39	CON	X-11	10:11:47	10:11:50	SSI	48"First soft start then hammer stopped working properly. Stop to fix irt.
9/24/2013	47.75042	122.72536	7:40	17:39	CON	X-11	11:07:24	11:07:26	SSI	
9/24/2013	47.75042	122.72536	7:40	17:39	CON	X-11	11:08:28	11:08:30	SSI	
9/24/2013	47.75042	122.72536	7:40	17:39	CON	X-11	11:09:30	11:09:33	SSI	
9/24/2013	47.75042	122.72536	7:40	17:39	CON	X-11	11:12:20	11:12:21	I	
9/24/2013	47.75042	122.72536	7:40	17:39	CON	X-11	11:13:21	11:13:22	I	
9/24/2013	47.75042	122.72536	7:40	17:39	CON	X-11	11:14:20	11:20:53	I	
9/24/2013	47.75042	122.72536	7:40	17:39	CON	X-11	11:28:01	11:33:33	I	
9/24/2013	47.75042	122.72536	7:40	17:39	CON	X-11	11:39:38	11:47:44	I	
9/24/2013	47.75042	122.72536	7:40	17:39	CON	X-10	12:49:37	12:49:38	SSI	
9/24/2013	47.75042	122.72536	7:40	17:39	CON	X-10	12:50:33	12:50:35	SSI	
9/24/2013	47.75042	122.72536	7:40	17:39	CON	X-10	12:51:37	12:51:39	SSI	
9/24/2013	47.75042	122.72536	7:40	17:39	CON	X-10	12:52:42	13:21:31	I	
9/24/2013	47.75042	122.72536	7:40	17:39	CON	V-11	13:37:14	13:58:40	I	
9/24/2013	47.75042	122.72536	7:40	17:39	CON	V-10	14:16:32	14:31:49	I	
9/24/2013	47.75042	122.72536	7:40	17:39	CON	T-11	14:46:46	15:07:57	I	
9/24/2013	47.75042	122.72536	7:40	17:39	CON	T-10	15:25:31	15:41:07	I	
9/24/2013	47.75042	122.72536	7:40	17:39	CON	R-11	15:55:50	15:57:25	I	48"
9/24/2013	47.75042	122.72536	7:40	17:39	CON	R-11	16:21:38	16:35:55	I	
9/24/2013	47.75042	122.72536	7:40	17:39	CON	R-10	16:53:52	17:08:24	I	48
9/24/2013	47.75042	122.72536	7:40	17:39	POST		17:09:06	17:13:11	NONE	
9/25/2013	47.75042	122.72536	7:58	16:53	PRE		7:58:00	9:03:49	NONE	
9/25/2013	47.75042	122.72536	7:58	16:53	CON	M-11	8:53:02	8:53:13	SSI	
9/25/2013	47.75042	122.72536	7:58	16:53	CON	M-11	8:54:23	8:54:27	SSI	
9/25/2013	47.75042	122.72536	7:58	16:53	CON	M-11	8:55:31	8:55:33	SSI	
9/25/2013	47.75042	122.72536	7:58	16:53	CON	M-11	8:56:37	9:03:51	I	
9/25/2013	47.75042	122.72536	7:58	16:53	CON	M-10	9:26:38	9:37:10	I	
9/25/2013	47.75042	122.72536	7:58	16:53	CON	M-10	9:39:08	9:48:36	I	
9/25/2013			7:58	11:30	CON	V.1W-7	9:57:20	9:57:48	V	Batter pile
9/25/2013			7:58	11:30	CON	V.1W-7	10:11:20	10:37:48	V	Batter pile
9/25/2013	47.75042	122.72536	7:58	16:53	CON	X-9	12:50:37	12:52:47	V	48"
9/25/2013	47.75042	122.72536	7:58	16:53	CON	X-9	12:54:02	12:55:15	V	
9/25/2013	47.75042	122.72536	7:58	16:53	CON	X-9	12:55:34	12:56:12	V	
9/25/2013	47.75042	122.72536	7:58	16:53	CON	V-9	13:35:35	13:40:27	V	48"
9/25/2013	47.75042	122.72536	7:58	16:53	CON	T-9	14:14:45	14:15:27	V	48"
9/25/2013	47.75042	122.72536	7:58	16:53	CON	T-9	14:16:33	14:18:15	V	
9/25/2013	47.75042	122.72536	7:58	16:53	CON	T-9	14:19:07	14:19:40	V	
9/25/2013	47.75042	122.72536	7:58	16:53	CON	R-9	14:53:52	14:56:06	V	

Date	Latitude	Longitude	Time Effort Initiated	Time Effort Completed	Event Code	Pile	Start Time	End Time	Const Type	Comments
9/25/2013	47.75042	122.72536	7:58	16:53	CON	R-9	14:56:15	15:00:39	V	
9/25/2013	47.75042	122.72536	7:58	16:53	CON	M-9	15:32:02	15:35:51	V	48"
9/25/2013	47.75042	122.72536	7:58	16:53	CON	M-9	15:36:18	15:37:02	V	
9/25/2013	47.75042	122.72536	7:58	16:53	CON	J-9	16:11:12	16:12:08	V	48"
9/25/2013	47.75042	122.72536	7:58	16:53	CON	J-9	16:13:33	16:15:52	V	
9/25/2013	47.75042	122.72536	7:58	16:53	CON	J-9	16:16:39	16:18:55	V	
9/25/2013	47.75042	122.72536	7:58	16:53	CON	J-9	16:19:56	16:20:52	V	
9/25/2013	47.75042	122.72536	7:58	16:53	CON	J-9	16:21:32	16:22:05	V	
9/25/2013	47.75042	122.72536	7:58	16:53	POST		16:23:00	16:53:00	NONE	
9/26/2013	47.75065	122.72498	7:58	16:58	PRE		9:00:00	9:30:00	NONE	
9/26/2013			7:58	12:00	CON	V.1W-7	9:42:41	9:42:43	SSI	batter pile
9/26/2013			7:58	12:00	CON	V.1W-7	9:43:26	9:43:27	SSI	batter pile
9/26/2013			7:58	12:00	CON	V.1W-7	9:44:20	9:44:21	SSI	batter pile
9/26/2013			7:58	12:00	CON	V.1W-7	9:45:00	9:57:42	I	batter pile
9/26/2013	47.75065	122.72498	7:58	16:58	CON	X-8	10:15:03	10:16:47	V	48"
9/26/2013	47.75065	122.72498	7:58	16:58	CON	X-8	10:17:12	10:18:04	V	
9/26/2013	47.75065	122.72498	7:58	16:58	CON	X-8	10:20:56	10:21:16	V	
9/26/2013	47.75065	122.72498	7:58	16:58	CON	X-8	10:22:38	10:23:18	V	
9/26/2013	47.75065	122.72498	7:58	16:58	CON	V-8	11:17:16	11:19:04	V	48"
9/26/2013	47.75065	122.72498	7:58	16:58	CON	V-8	11:21:55	11:22:26	V	
9/26/2013	47.75065	122.72498	7:58	16:58	CON	V-8	11:24:28	11:24:48	V	
9/26/2013	47.75065	122.72498	7:58	16:58	CON	V-8	11:25:47	11:26:06	V	
9/26/2013	47.75065	122.72498	7:58	16:58	CON	T-8	13:09:51	13:12:17	V	48"
9/26/2013	47.75065	122.72498	7:58	16:58	CON	T-8	13:13:01	13:14:20	V	
9/26/2013	47.75065	122.72498	7:58	16:58	CON	R-8	13:50:42	13:52:16	V	48"
9/26/2013	47.75065	122.72498	7:58	16:58	CON	R-8	13:52:32	13:53:35	V	
9/26/2013	47.75065	122.72498	7:58	16:58	CON	M-8	14:35:45	14:38:07	V	48"
9/26/2013	47.75065	122.72498	7:58	16:58	CON	M-8	14:39:39	14:40:13	V	
9/26/2013	47.75065	122.72498	7:58	16:58	CON	M-8	14:41:04	14:42:09	V	
9/26/2013	47.75065	122.72498	7:58	16:58	CON	J-8	15:40:26	15:41:30	V	48"
9/26/2013	47.75065	122.72498	7:58	16:58	CON	J-8	15:42:22	15:43:56	V	
9/26/2013	47.75065	122.72498	7:58	16:58	CON	J-8	15:47:57	15:49:10	V	
9/26/2013	47.75065	122.72498	7:58	16:58	CON	J-8	15:51:04	15:52:00	V	
9/26/2013	47.75065	122.72498	7:58	16:58	CON	J-8	16:00:09	16:07:42	V	Vibe Out to reset
9/26/2013	47.75065	122.72498	7:58	16:58	CON	J-8	16:15:35	16:16:16	V	
9/26/2013	47.75065	122.72498	7:58	16:58	CON	J-8	16:18:11	16:20:17	V	
9/26/2013	47.75065	122.72498	7:58	16:58	CON	J-8	16:22:12	16:22:51	V	
9/26/2013	47.75065	122.72498	7:58	16:58	CON	J-8	16:27:24	16:28:28	V	
9/26/2013	47.75065	122.72498	7:58	16:58	POST		16:29:19	4:59:19	NONE	
9/27/2013	47.75274	122.72401	13:05	15:57	PRE	NA	13:05:22	13:20:23	NONE	

Date	Latitude	Longitude	Time Effort Initiated	Time Effort Completed	Event Code	Pile	Start Time	End Time	Const Type	Comments
9/27/2013	47.75274	122.72401	13:05	15:57	CON	V.1W-5	15:13:07	15:27:29	V	
9/27/2013	47.75274	122.72401	13:05	15:57	POST	NA	15:27:30	15:57:56	NONE	
9/30/2013	47.75282	122.72437	9:08	16:46	PRE		9:08:00	9:23:00	NONE	
9/30/2013	47.7527	122.72405	9:08	16:46	CON	X-7	10:47:32	10:47:57	V	48"
9/30/2013	47.7527	122.72405	9:08	16:46	CON	X-7	10:48:24	10:49:36	V	48"
9/30/2013	47.7527	122.72405	9:08	16:46	CON	X-7	10:50:48	10:51:14	V	48"
9/30/2013	47.7527	122.72405	9:08	16:46	CON	X-7	10:54:49	10:55:03	V	48"
9/30/2013	47.7527	122.72405	9:08	16:46	CON	X-7	10:55:53	10:56:13	V	48"
9/30/2013	47.7527	122.72405	9:08	16:46	CON	V-7	11:30:36	11:31:27	V	48"
9/30/2013	47.7527	122.72405	9:08	16:46	CON	V-7	11:33:02	11:33:45	V	48"
9/30/2013	47.7527	122.72405	9:08	16:46	CON	V-7	11:34:14	11:35:18	V	48"
9/30/2013	47.7527	122.72405	9:08	16:46	CON	V-7	11:42:51	12:33:17	V	48"
9/30/2013	47.7527	122.72405	9:08	16:46	CON	V-7	11:44:18	11:45:05	V	48"
9/30/2013	47.75282	122.72437	9:08	16:46	CON	V.1W-5	12:12:52	12:12:54	SSI	
9/30/2013	47.75282	122.72437	9:08	16:46	CON	V.1W-5	12:13:42	12:13:43	SSI	
9/30/2013	47.75282	122.72437	9:08	16:46	CON	V.1W-5	12:14:29	12:14:32	SSI	
9/30/2013	47.75282	122.72437	9:08	16:46	CON	V.1W-5	12:15:35	12:46:22	I	
9/30/2013	47.7527	122.72405	9:08	16:46	CON	V-7	12:28:59	12:33:20	V	48"
9/30/2013	47.7527	122.72405	9:08	16:46	CON	V-7	12:38:44	12:41:42	V	48"
9/30/2013	47.7527	122.72405	9:08	16:46	CON	V-7	12:42:50	12:43:39	V	48"
9/30/2013	47.7527	122.72405	9:08	16:46	CON	V-7	12:46:01	12:47:37	V	48"
9/30/2013	47.7527	122.72405	9:08	16:46	CON	V-7	12:48:52	12:50:06	V	48"
9/30/2013	47.7527	122.72405	9:08	16:46	CON	V-7	12:50:31	12:51:10	V	48"
9/30/2013	47.7527	122.72405	9:08	16:46	CON	V-7	12:52:19	12:53:29	V	48"
9/30/2013	47.7527	122.72405	9:08	16:46	CON	V-7	12:55:02	12:55:24	V	48"
9/30/2013	47.7527	122.72405	9:08	16:46	CON	T-7	13:23:52	13:24:18	V	48"
9/30/2013	47.7527	122.72405	9:08	16:46	CON	T-7	13:25:23	13:27:16	V	48"
9/30/2013	47.7527	122.72405	9:08	16:46	CON	T-7	13:29:39	13:30:39	V	48"
9/30/2013	47.7527	122.72405	9:08	16:46	CON	R-7	14:44:36	14:45:28	V	48"
9/30/2013	47.7527	122.72405	9:08	16:46	CON	R-7	14:46:23	14:48:12	V	48"
9/30/2013	47.7527	122.72405	9:08	16:46	CON	R-7	14:49:50	14:50:21	V	48"
9/30/2013	47.7527	122.72405	9:08	16:46	CON	R-7	14:52:15	14:53:09	V	48"
9/30/2013	47.7527	122.72405	9:08	16:46	CON	M-7	15:26:00	15:26:51	V	48"
9/30/2013	47.7527	122.72405	9:08	16:46	CON	M-7	15:27:54	15:29:28	V	48"
9/30/2013	47.7527	122.72405	9:08	16:46	CON	M-7	15:31:42	15:32:18	V	48"
9/30/2013	47.7527	122.72405	9:08	16:46	CON	M-7	15:33:04	15:33:39	V	48"
9/30/2013	47.7527	122.72405	9:08	16:46	CON	J-7	16:07:58	16:09:05	V	48"
9/30/2013	47.7527	122.72405	9:08	16:46	CON	J-7	16:10:34	16:10:50	V	48"
9/30/2013	47.7527	122.72405	9:08	16:46	CON	J-7	16:11:57	16:12:31	V	48"
9/30/2013	47.7527	122.72405	9:08	16:46	CON	J-7	16:13:34	16:15:22	V	48"

Date	Latitude	Longitude	Time Effort Initiated	Time Effort Completed	Event Code	Pile	Start Time	End Time	Const Type	Comments
9/30/2013	47.7527	122.72405	9:08	16:46	POST		16:15:23	16:46:02	NONE	
9/30/2013	47.75282	122.72437	9:08	16:46	POST		16:16:00	16:46:00	NONE	
10/1/2013	47.75062	122.72509	7:30	17:12	PRE		7:30:00	8:00:00	NONE	
10/1/2013	47.75062	122.72509	7:30	17:12	CON	X-9	10:00:51	10:00:53	SSI	
10/1/2013	47.75062	122.72509	7:30	17:12	CON	X-9	10:02:02	10:02:04	SSI	
10/1/2013	47.75062	122.72509	7:30	17:12	CON	X-9	10:03:10	10:03:12	SSI	
10/1/2013	47.75062	122.72509	7:30	17:12	CON	X-9	10:04:17	10:28:15	I	
10/1/2013	47.75062	122.72509	7:30	17:12	CON	X-8	10:42:19	10:54:37	I	
10/1/2013	47.75062	122.72509	7:30	17:12	CON	X-7	11:08:42	11:24:16	I	
10/1/2013	47.75062	122.72509	7:30	17:12	CON	V-7	11:43:59	11:56:42	I	
10/1/2013	47.75062	122.72509	7:30	17:12	CON	V-8	12:52:38	12:52:40	SSI	
10/1/2013	47.75062	122.72509	7:30	17:12	CON	V-8	12:53:51	12:53:53	SSI	
10/1/2013	47.75062	122.72509	7:30	17:12	CON	V-8	12:55:00	12:55:02	SSI	
10/1/2013	47.75062	122.72509	7:30	17:12	CON	V-8	12:56:13	13:12:00	I	failed to meet capacity
10/1/2013	47.75062	122.72509	7:30	17:12	CON	V-8	13:14:51	13:15:24	I	failed to meet capacity
10/1/2013	47.75062	122.72509	7:30	17:12	CON	V-9	13:28:28	13:44:12	I	
10/1/2013	47.75062	122.72509	7:30	17:12	CON	T-9	14:16:03	14:32:21	I	
10/1/2013	47.75062	122.72509	7:30	17:12	CON	T-8	14:46:14	15:01:55	I	failed to meet capacity
10/1/2013	47.75062	122.72509	7:30	17:12	CON	T-7	15:14:45	15:34:45	I	
10/1/2013	47.75062	122.72509	7:30	17:12	CON	R-7	15:47:38	15:51:37	I	pile out of line
10/1/2013	47.75062	122.72509	7:30	17:12	CON	R-8	16:03:47	16:20:19	I	
10/1/2013	47.75062	122.72509	7:30	17:12	CON	R-9	16:31:53	16:42:09	I	
10/1/2013	47.75062	122.72509	7:30	17:12	POST		16:42:10	17:12:10	NONE	
10/2/2013	47.75062	122.7251	7:30	15:48	PRE		8:15:55	8:45:04	NONE	
10/2/2013	47.75062	122.7251	7:30	15:48	CON	R-7	9:28:08	9:28:09	SSI	
10/2/2013	47.75062	122.7251	7:30	15:48	CON	R-7	9:29:55	9:29:57	SSI	
10/2/2013	47.75062	122.7251	7:30	15:48	CON	R-7	9:31:07	9:31:08	SSI	
10/2/2013	47.75062	122.7251	7:30	15:48	CON	R-7	9:32:18	9:47:39	I	
10/2/2013	47.75062	122.7251	7:30	15:48	CON	R-7	9:50:41	9:52:00	I	
10/2/2013	47.75062	122.7251	7:30	15:48	CON	M-9	10:50:36	10:50:38	SSI	
10/2/2013	47.75062	122.7251	7:30	15:48	CON	M-9	10:51:48	10:51:49	SSI	
10/2/2013	47.75062	122.7251	7:30	15:48	CON	M-9	10:53:03	10:53:04	SSI	
10/2/2013	47.75062	122.7251	7:30	15:48	CON	M-9	10:54:14	11:10:06	I	
10/2/2013	47.75062	122.7251	7:30	15:48	CON	J-9	11:24:48	11:46:01	I	
10/2/2013	47.75062	122.7251	7:30	15:48	CON	M-8	12:54:10	12:54:11	SSI	
10/2/2013	47.75062	122.7251	7:30	15:48	CON	M-8	12:55:19	12:55:20	SSI	
10/2/2013	47.75062	122.7251	7:30	15:48	CON	M-8	12:56:32	12:56:34	SSI	
10/2/2013	47.75062	122.7251	7:30	15:48	CON	M-8	12:57:41	13:13:57	I	
10/2/2013	47.75062	122.7251	7:30	15:48	CON	J-8	13:27:53	13:32:47	I	
10/2/2013	47.75062	122.7251	7:30	15:48	CON	J-8	13:34:54	13:50:38	I	

Date	Latitude	Longitude	Time Effort Initiated	Time Effort Completed	Event Code	Pile	Start Time	End Time	Const Type	Comments
10/2/2013	47.75062	122.7251	7:30	15:48	CON	J-7	14:17:26	14:31:45	I	
10/2/2013	47.75062	122.7251	7:30	15:48	CON	M-7	14:59:38	15:02:13	I	
10/2/2013	47.75062	122.7251	7:30	15:48	CON	M-7	15:04:16	15:18:12	I	
10/2/2013	47.75062	122.7251	7:30	15:48	POST		15:18:24	15:48:02	NONE	
10/3/2013	47.75057	122.72543	8:00	15:57	PRE		8:00:31	8:30:35	NONE	
10/3/2013	47.75057	122.72543	8:00	15:57	CON	X-6	9:22:20	9:23:04	V	48"
10/3/2013	47.75057	122.72543	8:00	15:57	CON	X-6	9:24:58	9:26:28	V	
10/3/2013	47.75057	122.72543	8:00	15:57	CON	X-6	9:28:50	9:29:09	V	
10/3/2013	47.75057	122.72543	8:00	15:57	CON	X-6	9:30:50	9:31:32	V	
10/3/2013	47.75057	122.72543	8:00	15:57	CON	X-6	9:35:28	9:35:37	V	
10/3/2013	47.75057	122.72543	8:00	15:57	CON	X-6	9:38:25	9:42:25	V	Vibing out
10/3/2013	47.75057	122.72543	8:00	15:57	CON	X-6	9:48:00	9:52:13	V	Drive
10/3/2013	47.75057	122.72543	8:00	15:57	CON	V-6	10:49:41	10:58:48	V	48"
10/3/2013	47.75057	122.72543	8:00	15:57	CON	V-6	10:59:41	11:00:35	V	
10/3/2013	47.75057	122.72543	8:00	15:57	CON	V-6	11:04:39	11:05:09	V	
10/3/2013	47.75057	122.72543	8:00	15:57	CON	V-6	11:10:28	11:13:12	V	
10/3/2013	47.75057	122.72543	8:00	15:57	CON	V-6	11:14:06	11:14:51	V	
10/3/2013	47.75057	122.72543	8:00	15:57	CON	V-6	11:15:20	11:16:15	V	
10/3/2013	47.75057	122.72543	8:00	15:57	CON	V-6	11:19:32	11:20:02	V	
10/3/2013	47.75057	122.72543	8:00	15:57	CON	V-6	11:28:32	11:29:23	V	
10/3/2013	47.75057	122.72543	8:00	15:57	CON	V-6	11:31:04	11:31:41	V	
10/3/2013	47.75057	122.72543	8:00	15:57	CON	T-6	12:50:39	12:51:37	V	48"
10/3/2013	47.75057	122.72543	8:00	15:57	CON	T-6	12:53:36	12:54:36	V	
10/3/2013	47.75057	122.72543	8:00	15:57	CON	T-6	12:54:56	12:59:20	V	
10/3/2013	47.75057	122.72543	8:00	15:57	CON	R-6	14:07:07	14:10:35	V	48"
10/3/2013	47.75057	122.72543	8:00	15:57	CON	R-6	14:11:42	14:13:08	V	
10/3/2013	47.75057	122.72543	8:00	15:57	CON	M-6	14:45:10	14:46:09	V	48"
10/3/2013	47.75057	122.72543	8:00	15:57	CON	M-6	14:47:02	14:49:00	V	
10/3/2013	47.75057	122.72543	8:00	15:57	CON	M-6	14:49:40	14:50:02	V	
10/3/2013	47.75057	122.72543	8:00	15:57	CON	J-6	15:21:14	15:22:20	V	48"
10/3/2013	47.75057	122.72543	8:00	15:57	CON	J-6	15:22:57	15:24:09	V	
10/3/2013	47.75057	122.72543	8:00	15:57	CON	J-6	15:26:05	15:27:16	V	
10/3/2013	47.75057	122.72543	8:00	15:57	POST		15:27:20	15:57:23	NONE	
10/4/2013	47.75037	122.72501	7:46	17:35	PRE		10:05:19	10:35:20	NONE	
10/4/2013	47.75037	122.72501	7:46	17:35	CON	L-44	11:51:39	11:51:40	SSI	
10/4/2013	47.75037	122.72501	7:46	17:35	CON	L-44	11:52:48	11:52:50	SSI	
10/4/2013	47.75037	122.72501	7:46	17:35	CON	L-44	11:53:54	11:53:55	SSI	
10/4/2013	47.75037	122.72501	7:46	17:35	CON	L-44	11:54:59	11:55:04	I	
10/4/2013	47.75037	122.72501	7:46	17:35	CON	L-44	11:56:05	11:56:40	I	
10/4/2013	47.75037	122.72501	7:46	17:35	CON	J-40	15:02:35	15:02:36	SSI	

Date	Latitude	Longitude	Time Effort Initiated	Time Effort Completed	Event Code	Pile	Start Time	End Time	Const Type	Comments
10/4/2013	47.75037	122.72501	7:46	17:35	CON	J-40	15:03:37	15:03:38	SSI	
10/4/2013	47.75037	122.72501	7:46	17:35	CON	J-40	15:04:39	15:04:40	SSI	
10/4/2013	47.75037	122.72501	7:46	17:35	CON	J-40	15:05:40	15:06:04	I	
10/4/2013	47.75037	122.72501	7:46	17:35	CON	Temp-1	15:14:23	15:29:41	V	
10/4/2013	47.75037	122.72501	7:46	17:35	CON	Temp-1	15:32:23	15:33:15	V	
10/4/2013	47.75037	122.72501	7:46	17:35	CON	J-38	15:38:23	15:38:24	SSI	
10/4/2013	47.75037	122.72501	7:46	17:35	CON	J-38	15:39:20	15:39:22	SSI	
10/4/2013	47.75037	122.72501	7:46	17:35	CON	J-38	15:40:16	15:40:17	SSI	
10/4/2013	47.75037	122.72501	7:46	17:35	CON	J-38	15:41:07	15:49:07	I	
10/4/2013	47.75037	122.72501	7:46	17:35	CON	J-37	16:00:35	16:06:52	I	
10/4/2013	47.75037	122.72501	7:46	17:35	CON	J-36	16:19:01	16:27:55	I	
10/4/2013	47.75037	122.72501	7:46	17:35	CON	Temp-1	16:22:14	16:25:54	V	
10/4/2013	47.75037	122.72501	7:46	17:35	CON	Temp-1	16:30:18	16:39:00	V	
10/4/2013	47.75037	122.72501	7:46	17:35	CON	M-36	16:37:40	16:50:39	I	
10/4/2013	47.75037	122.72501	7:46	17:35	CON	N-36	17:02:01	17:05:03	I	1586 total blow count
10/4/2013	47.75037	122.72501	7:46	17:35	POST		17:05:42	17:35:48	NONE	
10/7/2013	47.75246	122.72501	9:46	17:35	PRE		9:46:32	10:01:33	NONE	
10/7/2013	47.75037	122.72501	9:46	17:35	PRE		9:46:33	10:01:47	NONE	
10/7/2013	47.75037	122.72501	9:46	17:35	CON	X-5	10:20:12	10:21:52	V	
10/7/2013	47.75037	122.72501	9:46	17:35	CON	X-5	10:23:06	10:24:01	V	
10/7/2013	47.75037	122.72501	9:46	17:35	CON	X-5	10:24:28	10:25:20	V	
10/7/2013	47.75037	122.72501	9:46	17:35	CON	X-5	10:25:51	10:26:02	V	
10/7/2013	47.75037	122.72501	9:46	17:35	CON	V-5	11:06:34	11:07:19	V	
10/7/2013	47.75037	122.72501	9:46	17:35	CON	V-5	11:07:43	11:08:53	V	
10/7/2013	47.75037	122.72501	9:46	17:35	CON	V-5	11:10:37	11:13:06	V	
10/7/2013	47.75037	122.72501	9:46	17:35	CON	V-5	11:13:39	12:04:08	V	
10/7/2013	47.75037	122.72501	9:46	17:35	CON	V-5	11:15:08	11:15:31	V	
10/7/2013	47.75037	122.72501	9:46	17:35	CON	T-5	11:59:19	12:00:03	V	
10/7/2013	47.75037	122.72501	9:46	17:35	CON	T-5	12:00:46	12:04:16	V	
10/7/2013	47.75037	122.72501	9:46	17:35	CON	T-5	12:04:41	12:06:55	V	
10/7/2013	47.75246	122.72501	9:46	17:35	CON	J-35	12:57:26	12:57:29	SSI	
10/7/2013	47.75246	122.72501	9:46	17:35	CON	J-35	12:58:22	12:58:24	SSI	
10/7/2013	47.75246	122.72501	9:46	17:35	CON	J-35	12:59:18	12:59:20	SSI	
10/7/2013	47.75246	122.72501	9:46	17:35	CON	J-35	13:00:20	13:05:06	I	
10/7/2013	47.75246	122.72501	9:46	17:35	CON	J-35	13:07:27	13:07:50	I	
10/7/2013	47.75246	122.72501	9:46	17:35	CON	L-35	13:18:58	13:24:17	I	
10/7/2013	47.75037	122.72501	9:46	17:35	CON	R-5	13:24:44	13:28:23	V	
10/7/2013	47.75037	122.72501	9:46	17:35	CON	R-5	13:29:01	13:31:11	V	
10/7/2013	47.75246	122.72501	9:46	17:35	CON	L-34	13:38:22	13:43:15	I	
10/7/2013	47.75246	122.72501	9:46	17:35	CON	J-34	13:54:01	13:58:13	I	

Date	Latitude	Longitude	Time Effort Initiated	Time Effort Completed	Event Code	Pile	Start Time	End Time	Const Type	Comments
10/7/2013	47.75246	122.72501	9:46	17:35	CON	J-33	14:10:43	14:11:56	I	
10/7/2013	47.75246	122.72501	9:46	17:35	CON	L-33	14:21:59	14:27:48	I	
10/7/2013	47.75246	122.72501	9:46	17:35	CON	J-32	14:43:03	14:47:17	I	
10/7/2013	47.75246	122.72501	9:46	17:35	CON	L-32	14:58:36	15:02:41	I	
10/7/2013	47.75246	122.72501	9:46	17:35	CON	L-31	15:35:55	15:35:56	SSI	
10/7/2013	47.75246	122.72501	9:46	17:35	CON	L-31	15:38:39	15:38:40	SSI	
10/7/2013	47.75246	122.72501	9:46	17:35	CON	L-31	15:41:29	15:41:30	SSI	
10/7/2013	47.75246	122.72501	9:46	17:35	CON	L-31	15:44:10	15:53:05	I	
10/7/2013	47.75246	122.72501	9:46	17:35	CON	J-31	16:05:47	16:06:51	I	
10/7/2013	47.75037	122.72501	9:46	17:35	CON	M-5	16:09:01	16:10:49	V	
10/7/2013	47.75037	122.72501	9:46	17:35	CON	M-5	16:12:51	16:13:29	V	
10/7/2013	47.75037	122.72501	9:46	17:35	CON	M-5	16:14:27	16:15:16	V	
10/7/2013	47.75037	122.72501	9:46	17:35	CON	J-5	17:00:23	17:02:01	V	
10/7/2013	47.75037	122.72501	9:46	17:35	CON	J-5	17:02:58	17:03:52	V	
10/7/2013	47.75037	122.72501	9:46	17:35	CON	J-5	17:04:43	17:05:34	V	
10/7/2013	47.75037	122.72501	9:46	17:35	POST		17:05:00	17:35:00	NONE	
10/7/2013	47.75037	122.72501	9:46	17:35	POST		17:05:35	17:35:35	NONE	
10/8/2013			7:45	16:47	PRE		7:45:00	8:00:57	NONE	
10/8/2013	47.75034	122.72501	7:45	16:48	CON	X-4	9:05:16	9:07:00	V	
10/8/2013	47.75034	122.72501	7:45	16:48	CON	X-4	9:07:54	9:08:56	V	
10/8/2013	47.75034	122.72501	7:45	16:48	CON	X-4	9:10:25	9:11:00	V	
10/8/2013	47.75034	122.72501	7:45	16:48	CON	X-4	9:11:35	9:12:01	V	
10/8/2013	47.75034	122.72501	7:45	16:48	CON	X-4	9:12:31	10:17:02	V	
10/8/2013			7:45	16:47	CON	J-30	9:12:56	9:12:58	SSI	Filter on hydraulic pack clogged, causing very slow soft start intervals.
10/8/2013	47.75034	122.72501	7:45	16:48	CON	X-4	9:13:49	9:14:27	V	
10/8/2013	47.75034	122.72501	7:45	16:48	CON	X-4	9:15:05	9:15:14	V	
10/8/2013			7:45	16:47	CON	J-30	9:18:06	9:18:09	SSI	
10/8/2013			7:45	16:47	CON	J-30	9:24:55	9:24:56	SSI	
10/8/2013			7:45	16:47	CON	J-30	9:28:49	9:31:30	I	
10/8/2013			7:45	16:47	CON	L-30	9:45:47	9:47:41	I	
10/8/2013	47.75034	122.72501	7:45	16:48	CON	V-4	10:20:12	10:24:32	V	
10/8/2013			7:45	16:47	CON	N-30	10:21:35	10:21:36	SSI	
10/8/2013			7:45	16:47	CON	N-30	10:24:33	10:24:34	SSI	
10/8/2013	47.75034	122.72501	7:45	16:48	CON	V-4	10:26:10	10:27:04	V	
10/8/2013			7:45	16:47	CON	N-30	10:27:27	10:27:28	SSI	
10/8/2013			7:45	16:47	CON	N-30	10:30:53	10:32:58	I	
10/8/2013	47.75034	122.72501	7:45	16:48	CON	V-4	10:32:45	10:33:42	V	
10/8/2013	47.75034	122.72501	7:45	16:48	CON	V-4	10:34:39	10:35:19	V	
10/8/2013			7:45	16:47	CON	N-30	10:38:19	10:38:53	I	

Date	Latitude	Longitude	Time Effort Initiated	Time Effort Completed	Event Code	Pile	Start Time	End Time	Const Type	Comments
10/8/2013			7:45	16:47	CON	L-29	11:18:35	11:18:36	SSI	
10/8/2013			7:45	16:47	CON	L-29	11:21:30	11:21:33	SSI	
10/8/2013			7:45	16:47	CON	L-29	11:24:18	11:24:19	SSI	
10/8/2013			7:45	16:47	CON	L-29	11:27:03	11:30:42	I	
10/8/2013	47.75034	122.72501	7:45	16:48	CON	T-4	11:29:10	11:30:26	V	
10/8/2013	47.75034	122.72501	7:45	16:48	CON	T-4	11:32:03	11:34:26	V	
10/8/2013	47.75034	122.72501	7:45	16:48	CON	T-4	11:36:57	11:37:15	V	
10/8/2013	47.75034	122.72501	7:45	16:48	CON	T-4	11:37:47	11:38:49	V	
10/8/2013			7:45	16:47	CON	J-29	11:42:40	11:44:17	I	
10/8/2013	47.75034	122.72501	7:45	16:48	CON	T-4	11:43:09	11:43:44	V	
10/8/2013	47.75034	122.72501	7:45	16:48	CON	T-4	11:44:13	11:44:47	V	
10/8/2013			7:45	16:47	CON	J-28	11:53:40	11:56:58	I	
10/8/2013			7:45	16:47	CON	L-28	12:53:04	12:53:05	SSI	
10/8/2013			7:45	16:47	CON	L-28	12:53:50	12:53:52	SSI	
10/8/2013			7:45	16:47	CON	L-28	12:54:38	12:54:40	SSI	
10/8/2013			7:45	16:47	CON	L-28	12:55:28	12:58:33	I	
10/8/2013			7:45	16:47	CON	N-28	13:15:55	13:18:43	I	
10/8/2013			7:45	16:47	CON	N-29	13:28:42	13:30:27	I	
10/8/2013	47.75034	122.72501	7:45	16:48	CON	R-4	14:09:36	14:11:03	V	
10/8/2013	47.75034	122.72501	7:45	16:48	CON	R-4	14:12:50	14:14:03	V	
10/8/2013	47.75034	122.72501	7:45	16:48	CON	R-4	14:15:07	14:20:34	V	
10/8/2013	47.75034	122.72501	7:45	16:48	CON	R-4	14:30:58	14:32:24	V	
10/8/2013	47.75034	122.72501	7:45	16:48	CON	R-4	14:33:34	14:36:45	V	
10/8/2013	47.75034	122.72501	7:45	16:48	CON	R-4	14:37:36	14:38:25	V	
10/8/2013	47.75034	122.72501	7:45	16:48	CON	M-4	15:21:43	15:27:37	V	
10/8/2013	47.75034	122.72501	7:45	16:48	CON	J-4	16:11:08	16:12:26	V	
10/8/2013	47.75034	122.72501	7:45	16:48	CON	J-4	16:13:35	16:15:14	V	
10/8/2013	47.75034	122.72501	7:45	16:48	CON	J-4	16:16:57	16:17:29	V	
10/8/2013			7:45	16:47	POST		16:17:56	16:47:57	NONE	
10/8/2013	47.75034	122.72501	7:45	16:48	POST		16:18:00	16:48:00	NONE	
10/9/2013			9:15	17:38	PRE		8:45:00	9:15:00	NONE	
10/9/2013	47.75034	122.72501	9:15	17:38	CON	X-6	10:40:46	10:40:48	SSI	48"
10/9/2013	47.75034	122.72501	9:15	17:38	CON	X-6	10:41:53	10:41:55	SSI	
10/9/2013	47.75034	122.72501	9:15	17:38	CON	X-6	10:43:03	10:43:04	SSI	
10/9/2013	47.75034	122.72501	9:15	17:38	CON	X-6	10:44:13	10:53:49	I	
10/9/2013	47.75034	122.72501	9:15	17:38	CON	V-6	11:14:13	11:22:27	I	48"
10/9/2013	47.75034	122.72501	9:15	17:38	CON	T-6	11:33:09	11:41:37	I	48"
10/9/2013	47.75034	122.72501	9:15	17:38	CON	R-6	11:51:50	11:58:25	I	48"
10/9/2013	47.75034	122.72501	9:15	17:38	CON	M-6	12:51:17	12:51:18	SSI	48"
10/9/2013	47.75034	122.72501	9:15	17:38	CON	M-6	12:52:17	12:52:20	SSI	

Date	Latitude	Longitude	Time Effort Initiated	Time Effort Completed	Event Code	Pile	Start Time	End Time	Const Type	Comments
10/9/2013	47.75034	122.72501	9:15	17:38	CON	M-6	12:53:23	12:53:25	SSI	
10/9/2013	47.75034	122.72501	9:15	17:38	CON	M-6	12:54:29	13:11:44	I	
10/9/2013	47.75034	122.72501	9:15	17:38	CON	M-6	13:13:23	13:17:03	I	
10/9/2013	47.75034	122.72501	9:15	17:38	CON	J-6	13:35:54	13:49:34	I	48"
10/9/2013	47.75034	122.72501	9:15	17:38	CON	X-5	14:18:28	14:29:34	I	48"
10/9/2013	47.75034	122.72501	9:15	17:38	CON	V-5	14:48:32	14:52:13	I	48"
10/9/2013	47.75034	122.72501	9:15	17:38	CON	V-5	15:15:36	15:19:31	I	
10/9/2013	47.75034	122.72501	9:15	17:38	CON	V-5	15:25:04	15:28:15	I	
10/9/2013	47.75034	122.72501	9:15	17:38	CON	T-5	15:45:01	15:53:56	I	48"
10/9/2013			9:15	17:38	CON	V.1W-2	16:01:20	16:01:52	V	LRB pile
10/9/2013			9:15	17:38	CON	V.1W-2	16:02:39	16:20:15	V	
10/9/2013	47.75034	122.72501	9:15	17:38	CON	R-5	16:06:36	16:10:07	I	48"
10/9/2013	47.75034	122.72501	9:15	17:38	CON	M-5	16:24:13	16:44:07	I	48"
10/9/2013	47.75034	122.72501	9:15	17:38	CON	J-5	16:55:53	17:08:18	I	48"
10/9/2013			9:15	17:38	POST		17:08:00	17:38:00	NONE	
10/9/2013	47.75034	122.72501	9:15	17:38	POST		17:08:00	17:38:00	NONE	
10/10/2013	47.75062	122.72571	8:30	18:00	PRE		8:30:32	8:45:33	NONE	
10/10/2013	47.75062	122.72571	8:30	18:00	CON	X-3	10:21:40	10:23:50	V	48"
10/10/2013	47.75062	122.72571	8:30	18:00	CON	X-3	10:25:10	10:32:56	V	
10/10/2013	47.75268	122.72423	8:30	18:00	CON	N-37	10:53:54	10:53:56	SSI	36"
10/10/2013	47.75268	122.72423	8:30	18:00	CON	N-37	10:55:04	10:55:06	SSI	
10/10/2013	47.75268	122.72423	8:30	18:00	CON	N-37	10:56:08	10:56:10	SSI	
10/10/2013	47.75268	122.72423	8:30	18:00	CON	N-37	10:57:04	10:59:03	I	
10/10/2013	47.75062	122.72571	8:30	18:00	CON	V-3	11:07:44	11:11:08	V	48"
10/10/2013	47.75062	122.72571	8:30	18:00	CON	V-3	11:11:32	11:13:12	V	
10/10/2013	47.75062	122.72571	8:30	18:00	CON	T-3	11:43:44	11:47:36	V	48"
10/10/2013	47.75062	122.72571	8:30	18:00	CON	T-3	11:48:02	11:48:41	V	
10/10/2013	47.75062	122.72571	8:30	18:00	CON	R-3	13:03:05	13:10:08	V	48"
10/10/2013	47.75062	122.72571	8:30	18:00	CON	M-3	13:43:51	13:45:25	V	48"
10/10/2013	47.75062	122.72571	8:30	18:00	CON	M-3	13:45:58	13:52:24	V	
10/10/2013	47.75062	122.72571	8:30	18:00	CON	J-3	14:47:32	14:50:21	V	48"
10/10/2013	47.75062	122.72571	8:30	18:00	CON	J-3	14:50:45	14:53:06	V	
10/10/2013	47.75062	122.72571	8:30	18:00	CON	J-3	14:53:36	14:54:20	V	
10/10/2013	47.75062	122.72571	8:30	18:00	CON	X-2	16:21:09	16:38:53	V	48"
10/10/2013	47.75268	122.72423	8:30	18:00	CON	V.1W-2	17:16:13	17:16:14	SSI	
10/10/2013	47.75268	122.72423	8:30	18:00	CON	V.1W-2	17:17:10	17:17:12	SSI	
10/10/2013	47.75268	122.72423	8:30	18:00	CON	V.1W-2	17:18:12	17:18:14	SSI	
10/10/2013	47.75268	122.72423	8:30	18:00	CON	V.1W-2	17:19:09	17:30:44	I	
10/10/2013	47.75268	122.72423	8:30	18:00	POST		17:30:00	18:00:00	NONE	
10/10/2013	47.75062	122.72571	8:30	18:00	POST		17:30:00	18:00:00	NONE	

Date	Latitude	Longitude	Time Effort Initiated	Time Effort Completed	Event Code	Pile	Start Time	End Time	Const Type	Comments
10/11/2013	47.75026	122.72512	7:45	17:59	PRE		7:45:00	8:15:00	NONE	
10/11/2013	47.75026	122.72512	7:45	17:59	CON	V-2	8:38:56	8:40:31	V	
10/11/2013	47.75026	122.72512	7:45	17:59	CON	V-2	8:43:54	8:44:41	V	
10/11/2013	47.75026	122.72512	7:45	17:59	CON	V-2	8:45:38	8:47:46	V	
10/11/2013	47.75026	122.72512	7:45	17:59	CON	V-2	8:48:41	8:48:56	V	
10/11/2013	47.75026	122.72512	7:45	17:59	CON	T-2	9:55:54	9:58:46	V	
10/11/2013	47.75026	122.72512	7:45	17:59	CON	T-2	9:59:42	10:00:42	V	
10/11/2013	47.75026	122.72512	7:45	17:59	CON	T-2	10:02:21	10:03:06	V	
10/11/2013	47.75026	122.72512	7:45	17:59	CON	T-2	10:10:38	10:15:04	V	
10/11/2013	47.75026	122.72512	7:45	17:59	CON	T-2	10:17:04	10:17:46	V	
10/11/2013	47.75026	122.72512	7:45	17:59	CON	T-2	10:19:31	10:25:26	V	Out
10/11/2013	47.75026	122.72512	7:45	17:59	CON	T-2	10:53:43	10:57:17	V	
10/11/2013	47.75026	122.72512	7:45	17:59	CON	T-2	10:58:17	10:58:49	V	
10/11/2013	47.75026	122.72512	7:45	17:59	CON	T-2	10:59:55	11:00:15	V	
10/11/2013	47.75026	122.72512	7:45	17:59	CON	T-2	11:01:12	11:01:34	V	
10/11/2013	47.75026	122.72512	7:45	17:59	CON	T-2	11:02:10	11:02:30	V	
10/11/2013	47.75026	122.72512	7:45	17:59	CON	R-2	13:35:05	13:37:13	V	
10/11/2013	47.75026	122.72512	7:45	17:59	CON	R-2	13:38:11	13:42:19	V	
10/11/2013	47.75132	122.72449	7:45	17:59	CON	V-16	14:00:56	14:00:58	SSI	
10/11/2013	47.75132	122.72449	7:45	17:59	CON	V-16	14:02:01	14:02:03	SSI	
10/11/2013	47.75132	122.72449	7:45	17:59	CON	V-16	14:03:21	14:03:23	SSI	
10/11/2013	47.75132	122.72449	7:45	17:59	CON	V-16	14:04:38	14:18:22	I	
10/11/2013	47.75132	122.72449	7:45	17:59	CON	V-18	14:43:53	14:45:15	I	
10/11/2013	47.75132	122.72449	7:45	17:59	CON	V-18	14:53:06	14:55:20	I	
10/11/2013	47.75026	122.72512	7:45	17:59	CON	M-2	15:17:03	15:18:25	V	
10/11/2013	47.75026	122.72512	7:45	17:59	CON	M-2	15:18:55	15:21:58	V	
10/11/2013	47.75132	122.72449	7:45	17:59	CON	X-16	15:23:22	15:36:15	I	
10/11/2013	47.75026	122.72512	7:45	17:59	CON	M-2	15:25:27	15:26:05	V	
10/11/2013	47.75026	122.72512	7:45	17:59	CON	M-2	15:41:10	15:43:27	V	
10/11/2013	47.75132	122.72449	7:45	17:59	CON	V.1W-1	15:49:26	15:55:21	V	
10/11/2013	47.75026	122.72512	7:45	17:59	CON	M-2	16:13:12	16:15:48	V	
10/11/2013	47.75132	122.72449	7:45	17:59	CON	X-23	17:15:33	17:15:35	SSI	
10/11/2013	47.75132	122.72449	7:45	17:59	CON	X-23	17:16:30	17:16:32	SSI	
10/11/2013	47.75132	122.72449	7:45	17:59	CON	X-23	17:17:25	17:17:29	SSI	
10/11/2013	47.75132	122.72449	7:45	17:59	CON	X-23	17:18:18	17:20:33	I	
10/11/2013	47.75132	122.72449	7:45	17:59	CON	X-23	17:24:49	17:29:30	I	
10/11/2013	47.75026	122.72512	7:45	17:59	POST		17:29:00	17:59:00	NONE	
10/11/2013	47.75132	122.72449	7:45	17:59	POST		17:29:00	17:59:00	NONE	
10/12/2013	47.75173	122.72459	7:05	14:00	PRE		8:05:26	8:35:31	NONE	
10/12/2013	47.75173	122.72459	7:05	14:00	CON	X-24	8:31:51	8:31:52	SSI	

Date	Latitude	Longitude	Time Effort Initiated	Time Effort Completed	Event Code	Pile	Start Time	End Time	Const Type	Comments
10/12/2013	47.75173	122.72459	7:05	14:00	CON	X-24	8:32:47	8:32:48	SSI	
10/12/2013	47.75173	122.72459	7:05	14:00	CON	X-24	8:33:42	8:33:43	SSI	
10/12/2013	47.75173	122.72459	7:05	14:00	CON	X-24	8:34:35	8:39:31	I	
10/12/2013	47.75173	122.72459	7:05	14:00	CON	X-24	8:43:05	8:45:19	I	
10/12/2013	47.75173	122.72459	7:05	14:00	CON	V.1W-1	13:16:29	13:16:30	SSI	
10/12/2013	47.75173	122.72459	7:05	14:00	CON	V.1W-1	13:17:17	13:17:18	SSI	
10/12/2013	47.75173	122.72459	7:05	14:00	CON	V.1W-1	13:19:00	13:19:01	SSI	
10/12/2013	47.75173	122.72459	7:05	14:00	CON	V.1W-1	13:19:46	13:25:50	I	
10/12/2013	47.75173	122.72459	7:05	14:00	CON		13:30:00	14:00:00	NONE	
10/12/2013	47.75173	122.72459	7:05	14:00	CON	V.1W-1	13:30:25	13:30:45	I	
10/14/2013	47.75274	122.72415	8:30	16:00	PRE		8:00:00	8:30:00	NONE	
10/14/2013	47.75045	122.72554	8:00	16:00	PRE		8:00:00	8:15:00	NONE	
10/14/2013	47.75045	122.72554	8:00	16:00	CON	J-2	9:18:17	9:19:00	V	48"
10/14/2013	47.75045	122.72554	8:00	16:00	CON	J-2	9:19:28	9:22:52	V	
10/14/2013	47.75045	122.72554	8:00	16:00	CON	J-2	9:25:50	9:26:21	V	
10/14/2013	47.75045	122.72554	8:00	16:00	CON	J-2	9:27:35	9:28:19	V	
10/14/2013	47.75045	122.72554	8:00	16:00	CON	J-2	9:29:48	9:30:08	V	
10/14/2013	47.75045	122.72554	8:00	16:00	CON	J-2	9:32:13	9:33:41	V	
10/14/2013	47.75045	122.72554	8:00	16:00	CON	J-2	9:37:34	9:38:59	V	
10/14/2013	47.75045	122.72554	8:00	16:00	CON	J-2	9:39:28	9:40:28	V	
10/14/2013	47.75045	122.72554	8:00	16:00	CON	X-4	11:42:53	11:42:54	SSI	48"
10/14/2013	47.75045	122.72554	8:00	16:00	CON	X-4	11:44:08	11:44:10	SSI	
10/14/2013	47.75045	122.72554	8:00	16:00	CON	X-4	11:45:20	11:45:23	SSI	
10/14/2013	47.75045	122.72554	8:00	16:00	CON	X-4	11:46:35	12:02:36	I	
10/14/2013	47.75045	122.72554	8:00	16:00	CON	V-4	12:57:53	12:58:03	SSI	
10/14/2013	47.75045	122.72554	8:00	16:00	CON	V-4	12:58:54	12:58:58	SSI	
10/14/2013	47.75045	122.72554	8:00	16:00	CON	V-4	13:00:01	13:00:03	SSI	
10/14/2013	47.75045	122.72554	8:00	16:00	CON	V-4	13:01:06	13:05:25	I	
10/14/2013	47.75045	122.72554	8:00	16:00	CON	V-4	13:20:22	13:31:07	I	
10/14/2013	47.75045	122.72554	8:00	16:00	CON	T-4	13:46:04	13:48:18	I	
10/14/2013	47.75274	122.72415	8:30	16:00	CON	V.1W-4	13:49:00	13:56:34	V	
10/14/2013	47.75045	122.72554	8:00	16:00	CON	R-4	14:00:11	14:08:09	I	
10/14/2013	47.75045	122.72554	8:00	16:00	CON	M-4	14:23:40	14:28:43	I	
10/14/2013	47.75045	122.72554	8:00	16:00	CON	J-4	14:39:45	14:50:42	I	
10/14/2013	47.75045	122.72554	8:00	16:00	POST		14:51:00	15:21:00	NONE	
10/14/2013	47.75274	122.72415	8:30	16:00	POST		15:30:00	16:00:00	NONE	
10/15/2013	47.75271	122.72425	8:00	18:33	PRE		8:00:00	8:30:00	NONE	
10/15/2013	47.75045	122.72554	8:00	18:33	CON	X-1	9:22:39	9:24:49	V	48"
10/15/2013	47.75045	122.72554	8:00	18:33	CON	X-1	9:25:15	9:25:51	V	
10/15/2013	47.75045	122.72554	8:00	18:33	CON	X-1	9:26:22	9:28:59	V	

Date	Latitude	Longitude	Time Effort Initiated	Time Effort Completed	Event Code	Pile	Start Time	End Time	Const Type	Comments
10/15/2013	47.75045	122.72554	8:00	18:33	CON	X-1	9:29:25	9:30:08	V	
10/15/2013	47.75045	122.72554	8:00	18:33	CON	V-1	11:04:16	11:07:17	V	48"
10/15/2013	47.75045	122.72554	8:00	18:33	CON	V-1	11:08:07	11:10:51	V	
10/15/2013	47.75045	122.72554	8:00	18:33	CON	V-1	11:11:35	11:11:51	V	
10/15/2013	47.75271	122.72425	8:00	18:33	CON	V.1W-4	11:39:54	11:39:56	SSI	36"
10/15/2013	47.75271	122.72425	8:00	18:33	CON	V.1W-4	11:40:49	11:40:52	SSI	
10/15/2013	47.75271	122.72425	8:00	18:33	CON	V.1W-4	11:41:44	11:41:46	SSI	
10/15/2013	47.75271	122.72425	8:00	18:33	CON	V.1W-4	11:42:40	11:54:19	I	
10/15/2013	47.75045	122.72554	8:00	18:33	CON	T-1	11:48:47	11:50:56	V	48"
10/15/2013	47.75045	122.72554	8:00	18:33	CON	T-1	11:51:42	11:54:46	V	
10/15/2013	47.75271	122.72425	8:00	18:33	CON	V.1W-4	11:56:04	11:56:58	I	
10/15/2013	47.75271	122.72425	8:00	18:33	CON	V.1W-3	17:49:34	18:03:47	V	
10/15/2013	47.75271	122.72425	8:00	18:33	POST		18:03:00	18:33:00	NONE	
10/16/2013	47.75271	122.72425	8:30	15:30	PRE		8:30:00	9:00:00	NONE	
10/16/2013	47.75271	122.72425	8:30	15:30	CON	V.1W-3	9:59:51	9:59:52	SSI	
10/16/2013	47.75271	122.72425	8:30	15:30	CON	V.1W-3	10:01:27	10:01:28	SSI	
10/16/2013	47.75271	122.72425	8:30	15:30	CON	V.1W-3	10:02:55	10:02:57	SSI	
10/16/2013	47.75271	122.72425	8:30	15:30	CON	V.1W-3	10:04:09	10:20:25	I	
10/16/2013	47.75271	122.72425	8:30	15:30	CON	V.1W-3	10:33:17	10:34:36	I	
10/16/2013	47.75024	122.72525	8:00	15:30	CON	R-1	13:19:11	13:20:47	V	48"
10/16/2013	47.75024	122.72525	8:00	15:30	CON	R-1	13:21:08	13:23:34	V	
10/16/2013	47.75024	122.72525	8:00	15:30	CON	R-1	13:24:38	13:25:14	V	
10/16/2013	47.75024	122.72525	8:00	15:30	CON	R-1	13:29:17	13:30:36	V	
10/16/2013	47.75024	122.72525	8:00	15:30	CON	R-1	13:32:05	13:34:00	V	
10/16/2013	47.75024	122.72525	8:00	15:30	CON	M-1	14:05:23	14:06:43	V	
10/16/2013	47.75024	122.72525	8:00	15:30	CON	M-1	14:07:26	14:12:56	V	
10/16/2013	47.75024	122.72525	8:00	15:30	CON	M-1	14:14:11	14:15:18	V	
10/16/2013	47.75024	122.72525	8:00	15:30	CON	J-1	14:53:18	14:55:11	V	
10/16/2013	47.75024	122.72525	8:00	15:30	CON	J-1	14:55:39	14:58:39	V	
10/16/2013	47.75024	122.72525	8:00	15:30	CON	J-1	14:59:13	14:59:57	V	
10/16/2013	47.75271	122.72425	8:30	15:30	POST		15:00:00	15:30:00	NONE	
10/17/2013	47.75024	122.72525	9:13	17:20	PRE		9:26:41	21:41:00	NONE	
10/17/2013	47.75024	122.72525	9:13	17:20	CON	Temp-1	9:55:15	10:00:54	V	vibing pin pile 1
10/17/2013	47.75024	122.72525	9:13	17:20	CON	Temp-2	10:37:08	10:42:28	V	vibing pin pile2
10/17/2013	47.75024	122.72525	9:13	17:20	CON	Temp-3	11:16:34	11:19:16	V	vibing pin pile 3
10/17/2013	47.75024	122.72525	9:13	17:20	CON	Temp-4	11:58:15	12:02:43	V	vibing pin pile 4
10/17/2013	47.75024	122.72525	9:13	17:20	POST		16:50:00	17:20:00	NONE	
10/18/2013	47.75233	122.7248	8:45	18:06	PRE		8:45:00	9:00:00	NONE	
10/18/2013	47.75233	122.7248	8:45	18:06	CON	VX-61	10:28:14	10:59:34	V	
10/18/2013	47.75233	122.7248	8:45	18:06	CON	VX-63	17:10:14	17:35:49	V	

Date	Latitude	Longitude	Time Effort Initiated	Time Effort Completed	Event Code	Pile	Start Time	End Time	Const Type	Comments
10/18/2013	47.75233	122.7248	8:45	18:06	POST		17:36:00	18:06:00	NONE	
10/19/2013	47.75233	122.7248	11:20	17:15	PRE		11:20:57	11:50:57	NONE	
10/19/2013	47.75233	122.7248	11:20	17:15	CON	VX-63	13:37:37	13:37:40	SSI	
10/19/2013	47.75233	122.7248	11:20	17:15	CON	VX-63	13:38:50	13:38:51	SSI	
10/19/2013	47.75233	122.7248	11:20	17:15	CON	VX-63	13:39:25	13:39:26	I	
10/19/2013	47.75233	122.7248	11:20	17:15	CON	VX-63	13:39:57	13:50:05	I	
10/19/2013	47.7506	122.72637	11:20	17:15	CON	A-1	16:07:15	16:09:18	V	
10/19/2013	47.7506	122.72637	11:20	17:15	CON	A-1	16:07:17	16:09:00	V	first start and last end time are correct, but the other times are estimates because tablet went to a different form which cannot locate (?}
10/19/2013	47.7506	122.72637	11:20	17:15	CON	A-1	16:10:19	16:13:20	V	
10/19/2013	47.7506	122.72637	11:20	17:15	CON	A-1	16:10:52	16:14:22	V	
10/19/2013	47.75233	122.7248	11:20	17:15	POST		16:45:57	17:15:57	NONE	
10/21/2013	47.75054	122.72644	10:45	17:25	PRE		10:45:00	11:15:00	NONE	
10/21/2013	47.75054	122.72644	10:45	17:25	CON	C-2	11:45:59	11:46:38	V	36"
10/21/2013	47.75054	122.72644	10:45	17:25	CON	C-2	11:47:28	11:51:03	V	
10/21/2013	47.75054	122.72644	10:45	17:25	CON	C-2	11:52:04	11:53:41	V	
10/21/2013	47.75233	122.7248	10:45	17:25	CON	VX-64	13:09:53	13:19:56	V	36"
10/21/2013	47.75054	122.72644	10:45	17:25	CON	C-3	13:41:49	13:43:27	V	36"
10/21/2013	47.75054	122.72644	10:45	17:25	CON	C-3	13:44:36	13:46:04	V	
10/21/2013	47.75054	122.72644	10:45	17:25	CON	B-2	15:12:23	15:13:33	V	48"
10/21/2013	47.75054	122.72644	10:45	17:25	CON	B-2	15:14:45	15:16:42	V	
10/21/2013	47.75054	122.72644	10:45	17:25	CON	B-2	15:17:11	15:21:08	V	
10/21/2013	47.75054	122.72644	10:45	17:25	CON	A-2	16:18:45	16:20:55	V	
10/21/2013	47.75054	122.72644	10:45	17:25	CON	A-2	16:22:13	16:25:39	V	48"
10/21/2013	47.75054	122.72644	10:45	17:25	CON	A-2	16:30:50	16:31:54	V	
10/21/2013	47.75054	122.72644	10:45	17:25	CON	A-2	16:33:55	16:36:12	V	
10/21/2013	47.75233	122.7248	10:45	17:25	CON	VX-64	16:36:10	16:36:11	SSI	36"
10/21/2013	47.75233	122.7248	10:45	17:25	CON	VX-64	16:36:56	16:36:59	SSI	
10/21/2013	47.75233	122.7248	10:45	17:25	CON	VX-64	16:37:39	16:37:41	SSI	
10/21/2013	47.75233	122.7248	10:45	17:25	CON	VX-64	16:38:29	16:51:48	I	
10/21/2013	47.75054	122.72644	10:45	17:25	CON	A-2	16:40:46	16:43:50	V	
10/21/2013	47.75233	122.7248	10:45	17:25	MS	VX-64	16:51:48	16:55:10	NONE	Shutdown due to seal 15 m N of pile
10/21/2013	47.75054	122.72644	10:45	17:25	POST		16:55:00	17:25:00	NONE	
10/21/2013	47.75233	122.7248	10:45	17:25	CON	VX-64	16:55:10	16:55:38	I	
10/22/2013	47.75034	122.72601	8:40	18:11	PRE		8:40:00	9:10:00	NONE	
10/22/2013	47.75034	122.72601	8:40	18:11	CON	B-3	9:32:08	9:34:19	V	48"
10/22/2013	47.75034	122.72601	8:40	18:11	CON	B-3	9:35:05	9:37:24	V	
10/22/2013	47.75034	122.72601	8:40	18:11	CON	B-3	9:37:56	9:38:25	V	

Date	Latitude	Longitude	Time Effort Initiated	Time Effort Completed	Event Code	Pile	Start Time	End Time	Const Type	Comments
10/22/2013	47.75034	122.72601	8:40	18:11	CON	A-3	10:33:38	10:35:01	V	48"
10/22/2013	47.75034	122.72601	8:40	18:11	CON	A-3	10:35:45	10:38:25	V	
10/22/2013	47.75034	122.72601	8:40	18:11	CON	A-3	10:39:39	10:43:14	V	
10/22/2013	47.75034	122.72601	8:40	18:11	CON	A-3	10:43:29	10:43:51	V	
10/22/2013	47.75174	122.72477	8:40	18:11	CON	VX-61	17:21:25	17:41:14	V	
10/22/2013	47.75174	122.72477	8:40	18:11	POST		17:41:14	18:11:14	NONE	
10/23/2013	47.75182	122.7246	10:30	18:14	PRE		10:30:14	11:00:16	NONE	
10/23/2013	47.75182	122.7246	10:30	18:14	CON	VX-61	11:55:11	11:55:13	SSI	1
10/23/2013	47.75182	122.7246	10:30	18:14	CON	VX-61	11:55:54	11:55:57	SSI	2
10/23/2013	47.75182	122.7246	10:30	18:14	CON	VX-61	11:56:42	11:56:45	SSI	3
10/23/2013	47.75182	122.7246	10:30	18:14	CON	VX-61	11:57:39	11:58:54	I	
10/23/2013	47.75182	122.7246	10:30	18:14	CON	R-22	16:12:59	16:13:01	SSI	
10/23/2013	47.75182	122.7246	10:30	18:14	CON	R-22	16:13:47	16:13:49	SSI	
10/23/2013	47.75182	122.7246	10:30	18:14	CON	R-22	16:14:34	16:14:37	SSI	
10/23/2013	47.75182	122.7246	10:30	18:14	CON	R-22	16:15:22	16:16:26	I	
10/23/2013	47.75182	122.7246	10:30	18:14	CON	V-23	16:34:57	16:36:01	I	
10/23/2013	47.75182	122.7246	10:30	18:14	CON	V-23	17:06:08	17:07:50	I	
10/23/2013	47.75182	122.7246	10:30	18:14	CON	V-23	17:10:54	17:11:22	I	
10/23/2013	47.75076	122.72626	10:30	18:14	CON	B-4	17:38:45	17:43:48	V	
10/23/2013	47.75182	122.7246	10:30	18:14	POST		17:44:00	18:14:00	NONE	
10/23/2013	47.75076	122.72626	10:30	18:14	POST		17:44:00	18:14:00	NONE	
10/24/2013	47.74522	122.72633	12:30	17:32	PRE		12:30:55	12:45:56	NONE	
10/24/2013	47.74522	122.72633	12:30	17:32	CON	B-4	15:40:13	15:43:39	V	
10/24/2013	47.74522	122.72633	12:30	17:32	CON	B-4	15:44:23	15:45:08	V	
10/24/2013	47.74522	122.72633	12:30	17:32	CON	B-4	15:46:22	15:47:21	V	
10/24/2013	47.74522	122.72633	12:30	17:32	CON	A-4	16:54:51	16:57:01	V	
10/24/2013	47.74522	122.72633	12:30	17:32	CON	A-4	16:58:22	17:02:35	V	
10/24/2013	47.74522	122.72633	12:30	17:32	POST		17:02:08	17:30:45	NONE	
10/25/2013	47.75069	122.72636	8:20	17:28	PRE		8:20:00	8:35:00	NONE	
10/25/2013	47.75069	122.72636	8:20	17:28	CON	B-5	9:13:47	9:23:33	V	
10/25/2013	47.75069	122.72636	8:20	17:28	CON	A-5	10:31:22	10:42:57	V	
10/25/2013	47.75069	122.72636	8:20	17:28	CON	A-5	10:50:25	10:53:27	V	
10/25/2013	47.75069	122.72636	8:20	17:28	CON	B-6	11:57:36	12:05:34	V	
10/25/2013	47.75069	122.72636	8:20	17:28	CON	A-6	13:22:10	13:59:52	V	
10/25/2013	47.75069	122.72636	8:20	17:28	CON	B-7	14:55:27	15:05:10	V	
10/25/2013	47.75069	122.72636	8:20	17:28	CON	A-7	15:39:48	15:48:26	V	
10/25/2013	47.75219	122.72238	8:20	17:28	CON	Temp-2	15:49:52	15:57:41	V	Second pin pile
10/25/2013	47.75069	122.72636	8:20	17:28	CON	B-8	16:49:50	16:57:38	V	
10/25/2013	47.75069	122.72636	8:20	17:28	POST		16:58:00	17:28:00	NONE	
10/26/2013	47.75072	122.72632	8:16	12:30	PRE	NA	8:16:00	8:31:26	NONE	

Date	Latitude	Longitude	Time Effort Initiated	Time Effort Completed	Event Code	Pile	Start Time	End Time	Const Type	Comments
10/26/2013	47.75072	122.72632	8:16	12:30	CON	A-8	9:12:19	9:18:01	V	
10/26/2013	47.75072	122.72632	8:16	12:30	CON	A-8	9:18:49	9:19:26	V	
10/26/2013	47.75072	122.72632	8:16	12:30	CON	B-9	10:54:52	10:56:14	V	
10/26/2013	47.75072	122.72632	8:16	12:30	CON	B-9	10:56:57	11:06:14	V	
10/26/2013	47.75072	122.72632	8:16	12:30	CON	A-9	11:49:02	12:00:40	V	
10/26/2013	47.75072	122.72632	8:16	12:30	POST		12:00:43	12:30:43	NONE	
10/26/2013	47.75072	122.72632	16:00	17:47	PRE		16:00:26	16:15:32	NONE	
10/26/2013	47.75072	122.72632	16:00	17:47	CON	B-10	17:07:42	17:13:15	V	
10/26/2013	47.75072	122.72632	16:00	17:47	CON	B-10	17:14:12	17:17:05	V	
10/26/2013	47.75072	122.72632	16:00	17:47	POST		17:17:53	17:47:24	NONE	
10/29/2013	47.75072	122.72632	10:45	18:09	PRE		10:45:00	11:00:00	NONE	
10/29/2013	47.75072	122.72632	10:45	18:09	CON	A-10	12:29:20	12:29:30	V	
10/29/2013	47.75072	122.72632	10:45	18:09	CON	A-10	12:30:19	12:38:15	V	
10/29/2013	47.75072	122.72632	10:45	18:09	CON	B-11	13:24:36	13:26:37	V	
10/29/2013	47.75072	122.72632	10:45	18:09	CON	B-11	13:28:26	13:29:12	V	
10/29/2013	47.75072	122.72632	10:45	18:09	CON	B-11	13:30:06	13:30:49	V	
10/29/2013	47.75072	122.72632	10:45	18:09	CON	B-11	13:31:19	13:34:09	V	
10/29/2013	47.75072	122.72632	10:45	18:09	CON	B-11	13:41:59	13:44:14	V	Out/In
10/29/2013	47.75072	122.72632	10:45	18:09	CON	A-11	14:24:11	14:26:24	V	
10/29/2013	47.75072	122.72632	10:45	18:09	CON	A-11	14:27:28	14:28:57	V	
10/29/2013	47.75072	122.72632	10:45	18:09	CON	A-11	14:29:46	14:31:48	V	
10/29/2013	47.75072	122.72632	10:45	18:09	CON	A-11	14:32:41	14:36:14	V	
10/29/2013	47.75072	122.72632	10:45	18:09	CON	A-11	14:40:50	14:43:48	V	Out/In
10/29/2013	47.75072	122.72632	10:45	18:09	CON	A-11	14:46:10	14:48:06	V	Out/In
10/29/2013	47.75072	122.72632	10:45	18:09	CON	B-12	15:29:15	15:31:07	V	
10/29/2013	47.75072	122.72632	10:45	18:09	CON	B-12	15:32:26	15:33:20	V	
10/29/2013	47.75072	122.72632	10:45	18:09	CON	B-12	15:34:11	15:36:14	V	
10/29/2013	47.75072	122.72632	10:45	18:09	CON	B-12	15:37:23	15:40:24	V	
10/29/2013	47.75072	122.72632	10:45	18:09	CON	B-12	15:41:26	15:43:04	V	
10/29/2013	47.75072	122.72632	10:45	18:09	CON	B-12	15:45:47	15:46:47	V	
10/29/2013	47.75072	122.72632	10:45	18:09	CON	B-12	15:48:56	15:51:05	V	Out/In
10/29/2013	47.75072	122.72632	10:45	18:09	CON	A-12	16:24:23	16:28:18	V	
10/29/2013	47.75072	122.72632	10:45	18:09	CON	A-12	16:28:43	16:34:07	V	
10/29/2013	47.75072	122.72632	10:45	18:09	CON	A-12	16:36:20	16:37:04	V	
10/29/2013	47.75072	122.72632	10:45	18:09	CON	A-12	16:41:40	16:43:37	V	Out/In
10/29/2013	47.75072	122.72632	10:45	18:09	CON	B-13	17:19:08	17:19:21	V	
10/29/2013	47.75072	122.72632	10:45	18:09	CON	B-13	17:20:49	17:25:42	V	
10/29/2013	47.75072	122.72632	10:45	18:09	CON	B-13	17:26:44	17:29:38	V	
10/29/2013	47.75072	122.72632	10:45	18:09	CON	B-13	17:30:10	17:32:07	V	
10/29/2013	47.75072	122.72632	10:45	18:09	CON	B-13	17:32:44	17:34:05	V	

Date	Latitude	Longitude	Time Effort Initiated	Time Effort Completed	Event Code	Pile	Start Time	End Time	Const Type	Comments
10/29/2013	47.75072	122.72632	10:45	18:09	CON	B-13	17:37:16	17:39:07	V	Out/In
10/29/2013	47.75072	122.72632	10:45	18:09	POST		17:39:00	18:09:00	NONE	
10/30/2013	47.75127	122.72615	8:30	17:57	PRE		8:30:30	8:45:31	NONE	
10/30/2013	47.75127	122.72615	8:30	17:57	CON	A-13	11:31:07	11:37:53	V	
10/30/2013	47.75127	122.72615	8:30	17:57	CON	A-13	11:40:04	11:44:47	V	
10/30/2013	47.75127	122.72615	8:30	17:57	CON	A-13	11:46:45	11:47:33	V	
10/30/2013	47.75127	122.72615	8:30	17:57	CON	A-13	11:49:17	11:50:32	V	
10/30/2013	47.75127	122.72615	8:30	17:57	CON	A-13	11:51:35	11:52:28	V	
10/30/2013	47.75127	122.72615	8:30	17:57	CON	A-13	11:55:46	12:01:01	V	extracting
10/30/2013	47.75127	122.72615	8:30	17:57	CON	A-13	12:04:38	12:09:26	V	
10/30/2013	47.75127	122.72615	8:30	17:57	CON	B-14	14:24:53	14:38:17	V	
10/30/2013	47.75127	122.72615	8:30	17:57	CON	B-14	14:41:18	14:42:25	V	
10/30/2013	47.75127	122.72615	8:30	17:57	CON	A-14	15:21:06	15:29:36	V	
10/30/2013	47.75127	122.72615	8:30	17:57	CON	A-14	15:30:33	15:36:36	V	
10/30/2013	47.75127	122.72615	8:30	17:57	CON	B-15	16:17:02	16:30:45	V	
10/30/2013	47.75127	122.72615	8:30	17:57	CON	A-15	17:12:16	17:22:59	V	
10/30/2013	47.75127	122.72615	8:30	17:57	CON	A-15	17:24:43	17:25:33	V	
10/30/2013	47.75127	122.72615	8:30	17:57	CON	A-15	17:25:56	17:27:24	V	
10/30/2013	47.75127	122.72615	8:30	17:57	POST		17:27:24	17:57:24	NONE	
10/31/2013	47.75158	122.72628	8:15	16:54	PRE		8:15:00	8:30:00	NONE	
10/31/2013	47.75158	122.72628	8:15	16:54	CON	B-16	10:08:43	10:21:38	V	
10/31/2013	47.75158	122.72628	8:15	16:54	CON	A-16	11:48:26	12:00:37	V	
10/31/2013	47.75158	122.72628	8:15	16:54	CON	B-17	13:25:53	13:40:29	V	
10/31/2013			8:15	16:54	CON	VX-53	13:46:10	13:54:11	V	
10/31/2013			8:15	16:54	CON	VX-53	13:54:59	13:56:04	V	
10/31/2013	47.75158	122.72628	8:15	16:54	CON	A-17	16:10:23	16:18:36	V	
10/31/2013	47.75158	122.72628	8:15	16:54	CON	A-17	16:19:30	16:20:02	V	
10/31/2013	47.75158	122.72628	8:15	16:54	POST		16:24:00	16:54:00	NONE	
11/1/2013	47.75152	122.726	8:15	17:45	PRE		8:15:00	8:45:00	NONE	
11/1/2013	47.75152	122.726	8:15	17:45	CON	B-18	10:30:16	10:40:59	V	
11/1/2013	47.75152	122.726	8:15	17:45	CON	A-18	11:13:32	11:14:26	V	
11/1/2013	47.75152	122.726	8:15	17:45	CON	A-18	11:16:05	11:25:06	V	
11/1/2013	47.75152	122.726	8:15	17:45	CON	A-18	11:25:45	11:27:48	V	
11/1/2013	47.75152	122.726	8:15	17:45	CON	B-19	12:09:22	12:21:43	V	
11/1/2013	47.75229	122.72427	8:15	17:45	PRE	VX-53	13:00:00	13:30:00	NONE	
11/1/2013	47.75152	122.726	8:15	17:45	CON	A-19	14:01:10	14:09:45	V	
11/1/2013	47.75152	122.726	8:15	17:45	CON	A-19	14:11:13	14:13:59	V	
11/1/2013	47.75152	122.726	8:15	17:45	CON	B-20	14:54:46	15:06:01	V	
11/1/2013	47.75152	122.726	8:15	17:45	CON	A-20	15:41:53	15:51:36	V	
11/1/2013	47.75229	122.72427	8:15	17:45	CON	VX-53	16:56:18	16:56:22	SSI	

Date	Latitude	Longitude	Time Effort Initiated	Time Effort Completed	Event Code	Pile	Start Time	End Time	Const Type	Comments
11/1/2013	47.75229	122.72427	8:15	17:45	CON	VX-53	16:57:54	16:57:55	SSI	
11/1/2013	47.75229	122.72427	8:15	17:45	CON	VX-53	16:58:41	16:58:42	SSI	
11/1/2013	47.75229	122.72427	8:15	17:45	CON	VX-53	16:59:28	17:13:32	I	
11/1/2013	47.75152	122.726	8:15	17:45	CON	B-21	17:04:42	17:12:24	V	
11/1/2013	47.75152	122.726	8:15	17:45	CON	B-21	17:13:36	17:14:41	V	
11/1/2013	47.75152	122.726	8:15	17:45	POST		17:15:00	17:45:00	NONE	
11/1/2013	47.75229	122.72427	8:15	17:45	POST	VX-53	17:15:00	17:45:00	NONE	
11/4/2013	47.75229	122.72427	8:45	17:08	PRE		8:45:24	9:01:05	NONE	
11/4/2013	47.75229	122.72427	8:45	17:08	CON	A-21	9:21:00	9:32:36	V	
11/4/2013	47.75229	122.72427	8:45	17:08	CON	B-22	11:20:33	11:21:07	V	
11/4/2013	47.75229	122.72427	8:45	17:08	CON	B-22	11:22:17	11:34:01	V	
11/4/2013	47.75229	122.72427	8:45	17:08	CON	B-22	11:34:25	11:38:50	V	
11/4/2013			8:45	17:08	CON	V-20	11:41:27	11:41:30	SSI	SS1
11/4/2013			8:45	17:08	CON	V-20	11:42:32	11:42:33	SSI	SS2
11/4/2013			8:45	17:08	CON	V-20	11:43:40	11:43:41	SSI	SS3
11/4/2013			8:45	17:08	CON	V-20	11:44:06	11:45:58	I	
11/4/2013			8:45	17:08	CON	V-20	11:52:29	11:58:27	I	
11/4/2013			8:45	17:08	CON	V-20	12:10:29	12:14:29	I	
11/4/2013			8:45	17:08	CON	V-20	12:23:37	12:26:50	I	609 total for pile incl SS
11/4/2013			8:45	17:08	CON	X-20	12:45:33	12:46:44	I	
11/4/2013			8:45	17:08	CON	X-20	12:49:04	12:52:18	I	
11/4/2013			8:45	17:08	CON	V-19	13:15:57	13:16:51	I	
11/4/2013			8:45	17:08	CON	V-19	13:19:11	13:28:07	I	
11/4/2013			8:45	17:08	CON	V-19	13:30:19	13:32:36	I	
11/4/2013			8:45	17:08	CON	V-19	13:33:58	13:36:22	I	
11/4/2013			8:45	17:08	CON	V-19	13:38:34	13:39:47	I	
11/4/2013			8:45	17:08	CON	X-19	13:55:58	14:05:33	I	
11/4/2013			8:45	17:08	CON	X-19	14:12:58	14:17:06	I	521
11/4/2013	47.75229	122.72427	8:45	17:08	CON	A-22	14:30:10	14:40:07	V	
11/4/2013			8:45	17:08	CON	X-18	14:37:20	14:44:26	I	
11/4/2013			8:45	17:08	CON	V-17	15:15:45	15:21:08	I	
11/4/2013			8:45	17:08	CON	X-17	15:42:41	15:50:00	I	
11/4/2013	47.75229	122.72427	8:45	17:08	CON	B-23	16:26:13	16:30:26	V	
11/4/2013	47.75229	122.72427	8:45	17:08	CON	B-23	16:31:34	16:35:55	V	
11/4/2013	47.75229	122.72427	8:45	17:08	CON	B-23	16:36:34	16:37:12	V	
11/4/2013	47.75229	122.72427	8:45	17:08	POST		16:38:00	17:08:00	NONE	
11/5/2013	47.75194	122.72458	7:15	17:20	PRE		7:15:59	8:00:10	NONE	
11/5/2013	47.75198	122.72601	7:15	17:20	CON	A-23	8:52:05	8:53:31	V	48"
11/5/2013	47.75198	122.72601	7:15	17:20	CON	A-23	8:54:29	9:01:13	V	
11/5/2013	47.75198	122.72601	7:15	17:20	CON	A-23	9:01:38	9:02:03	V	

Date	Latitude	Longitude	Time Effort Initiated	Time Effort Completed	Event Code	Pile	Start Time	End Time	Const Type	Comments
11/5/2013	47.75194	122.72458	7:15	17:20	CON	VX-54	9:19:57	9:40:18	V	
11/5/2013	47.75198	122.72601	7:15	17:20	CON	A-24	10:11:00	10:15:35	V	
11/5/2013	47.75198	122.72601	7:15	17:20	CON	A-24	10:16:54	10:22:48	V	
11/5/2013	47.75198	122.72601	7:15	17:20	CON	A-24	10:24:02	10:26:20	V	
11/5/2013	47.75198	122.72601	7:15	17:20	CON	B-25	13:51:26	13:52:31	V	36"
11/5/2013	47.75198	122.72601	7:15	17:20	CON	B-25	13:53:10	13:54:21	V	
11/5/2013	47.75198	122.72601	7:15	17:20	CON	B-25	14:00:31	14:04:35	V	
11/5/2013	47.75198	122.72601	7:15	17:20	CON	B-25	14:07:07	14:08:42	V	
11/5/2013			13:25	15:30	CON	X-16	14:07:38	14:07:39	SSI	SS1
11/5/2013			13:25	15:30	CON	X-16	14:08:34	14:08:35	SSI	SS2
11/5/2013			13:25	15:30	CON	X-16	14:09:25	14:09:26	SSI	SS3
11/5/2013			13:25	15:30	CON	X-16	14:10:18	14:10:19	I	
11/5/2013			13:25	15:30	CON	X-16	14:11:20	14:13:47	I	
11/5/2013			13:25	15:30	CON	X-16	14:17:08	14:23:10	I	
11/5/2013	47.75198	122.72601	7:15	17:20	CON	A-25	14:45:33	14:47:07	V	36"
11/5/2013			13:25	15:30	CON	V-16	14:46:16	14:51:57	I	
11/5/2013	47.75198	122.72601	7:15	17:20	CON	A-25	14:47:54	14:51:45	V	
11/5/2013	47.75198	122.72601	7:15	17:20	CON	A-25	14:52:19	14:53:05	V	
11/5/2013			13:25	15:30	CON	V-16	15:00:21	15:04:54	I	
11/5/2013	47.75194	122.72458	7:15	17:20	CON	VX-55	16:12:11	16:50:07	V	
11/5/2013	47.75198	122.72601	7:15	17:20	CON	AB26-1	16:13:27	16:13:42	V	36" batter
11/5/2013	47.75198	122.72601	7:15	17:20	CON	AB26-1	16:14:45	16:15:53	V	
11/5/2013	47.75198	122.72601	7:15	17:20	CON	AB26-1	16:17:10	16:18:37	V	
11/5/2013	47.75198	122.72601	7:15	17:20	CON	AB26-1	16:20:40	16:22:22	V	
11/5/2013	47.75194	122.72458	7:15	17:20	POST		16:50:24	17:20:20	NONE	
11/6/2013	47.7522	122.72565	8:15	16:38	PRE		8:15:00	8:45:00	NONE	
11/6/2013	47.7522	122.72565	8:15	16:38	CON	A-26	10:32:02	10:33:21	V	36"
11/6/2013	47.7522	122.72565	8:15	16:38	CON	A-26	10:41:02	10:48:58	V	
11/6/2013	47.7522	122.72565	8:15	16:38	CON	A-26	10:53:34	10:59:20	V	Out
11/6/2013	47.7522	122.72565	8:15	16:38	CON	A-26	11:00:42	11:01:00	V	Out
11/6/2013	47.7522	122.72565	8:15	16:38	CON	A-26	11:08:36	11:10:14	V	Out
11/6/2013	47.7522	122.72565	8:15	16:38	CON	A-26	11:15:45	11:19:18	V	
11/6/2013	47.75194	122.72458	8:15	16:38	CON	VX-55	15:23:54	15:23:55	SSI	
11/6/2013	47.75194	122.72458	8:15	16:38	CON	VX-55	15:24:42	15:24:43	SSI	
11/6/2013	47.75194	122.72458	8:15	16:38	CON	VX-55	15:25:13	15:25:15	SSI	
11/6/2013	47.75194	122.72458	8:15	16:38	CON	VX-55	15:25:55	15:44:59	I	
11/6/2013	47.75194	122.72458	8:15	16:38	CON	VX-55	15:56:11	15:57:02	I	
11/6/2013	47.75194	122.72458	8:15	16:38	CON	VX-55	16:04:26	16:08:00	I	
11/6/2013	47.75194	122.72458	8:15	16:38	POST		16:08:00	4:38:00	NONE	
11/8/2013	47.75211	122.72448	8:30	12:35	PRE		8:30:09	8:45:10	NONE	

Date	Latitude	Longitude	Time Effort Initiated	Time Effort Completed	Event Code	Pile	Start Time	End Time	Const Type	Comments
11/8/2013	47.75211	122.72448	8:30	12:35	CON	VX-56	11:41:01	12:05:22	V	
11/8/2013	47.75211	122.72448	8:30	12:35	POST		12:05:23	12:35:23	NONE	
11/9/2013	47.75272	122.72501	8:20	17:01	PRE		8:20:00	8:35:00	NONE	
11/9/2013	47.75272	122.72501	8:20	17:01	CON	Temp-1	8:50:08	8:53:21	V	extracting floating template pile 8m se of n-37
11/9/2013	47.75272	122.72501	8:20	17:01	CON	Temp-1	9:01:24	9:03:39	V	extrating-stored in L-33
11/9/2013	47.75272	122.72501	8:20	17:01	CON	Temp-2	10:10:41	10:13:31	V	extracting floating template pile 12m se of n-37
11/9/2013	47.75272	122.72501	8:20	17:01	CON	Temp-2	10:15:57	10:17:54	V	extracting; stored in L-34
11/9/2013	47.75272	122.72501	8:20	17:01	CON	Temp-3	10:34:00	10:36:03	V	extracting floating template pile 5m e of n-36
11/9/2013	47.75272	122.72501	8:20	17:01	CON	Temp-3	10:43:17	10:44:18	V	extracting; stored in L-32
11/9/2013	47.75272	122.72501	8:20	17:01	CON	Temp-4	11:01:21	11:03:31	V	extracting floating template pile 7m se of n-36
11/9/2013	47.75272	122.72501	8:20	17:01	CON	Temp-4	11:08:29	11:10:11	V	extracting; stored in J-33
11/9/2013	47.75218	122.72554	8:20	17:01	CON	Temp-1	15:36:58	15:38:19	V	
11/9/2013	47.75218	122.72554	8:20	17:01	CON	Temp-1	15:39:18	15:40:16	V	
11/9/2013	47.75218	122.72554	8:20	17:01	CON	Temp-1	15:41:26	15:43:20	V	
11/9/2013	47.75218	122.72554	8:20	17:01	CON	Temp-1	15:44:13	15:45:01	V	
11/9/2013	47.75218	122.72554	8:20	17:01	CON	Temp-2	16:07:19	16:11:14	V	
11/9/2013	47.75218	122.72554	8:20	17:01	CON	Temp-2	16:12:36	16:12:59	V	
11/9/2013	47.75218	122.72554	8:20	17:01	CON	Temp-3	16:27:25	16:28:22	V	
11/9/2013	47.75218	122.72554	8:20	17:01	CON	Temp-3	16:29:12	16:30:08	V	
11/9/2013	47.75218	122.72554	8:20	17:01	POST		16:31:00	17:01:00	NONE	
11/11/2013	47.75221	122.72559	7:54	16:44	PRE		7:54:00	8:24:00	NONE	
11/11/2013	47.75221	122.72559	7:54	16:44	CON	J-27	14:57:22	15:01:57	V	
11/11/2013	47.75221	122.72559	7:54	16:44	CON	VX-56	15:00:00	15:00:01	SSI	
11/11/2013	47.75221	122.72559	7:54	16:44	CON	VX-56	15:01:00	15:01:01	SSI	
11/11/2013	47.75221	122.72559	7:54	16:44	CON	VX-56	15:01:50	15:01:52	SSI	
11/11/2013	47.75221	122.72559	7:54	16:44	CON	VX-56	15:03:00	15:20:00	I	
11/11/2013	47.75221	122.72559	7:54	16:44	CON	J-27	15:21:35	15:25:00	V	
11/11/2013	47.75221	122.72559	7:54	16:44	CON	J-27	15:31:04	15:34:01	V	
11/11/2013	47.75221	122.72559	7:54	16:44	CON	M-27	15:42:09	15:49:53	V	
11/11/2013	47.75221	122.72559	7:54	16:44	CON	R-27	15:58:04	15:59:20	V	
11/11/2013	47.75221	122.72559	7:54	16:44	CON	R-27	15:59:44	16:06:35	V	
11/11/2013	47.75221	122.72559	7:54	16:44	CON	M-27	16:12:26	16:14:11	V	needed to move the pile to the south
11/11/2013	47.75221	122.72559	7:54	16:44	POST		16:14:00	16:44:00	NONE	
11/12/2013	47.75235	122.72475	8:01	17:23	PRE		8:01:00	8:31:00	NONE	
11/12/2013	47.75235	122.72475	8:01	17:23	CON	N-31	14:06:52	14:06:54	SSI	
11/12/2013	47.75235	122.72475	8:01	17:23	CON	N-31	14:07:50	14:07:51	SSI	

Date	Latitude	Longitude	Time Effort Initiated	Time Effort Completed	Event Code	Pile	Start Time	End Time	Const Type	Comments
11/12/2013	47.75235	122.72475	8:01	17:23	CON	N-31	14:08:39	14:08:40	SSI	
11/12/2013	47.75235	122.72475	8:01	17:23	CON	N-31	14:09:50	14:13:53	I	
11/12/2013	47.75235	122.72475	8:01	17:23	MS		14:13:53	14:17:28	NONE	
11/12/2013	47.75235	122.72475	8:01	17:23	CON	N-31	14:18:13	14:19:05	I	
11/12/2013	47.75235	122.72475	8:01	17:23	CON	N-32	14:48:16	14:54:25	I	
11/12/2013	47.75235	122.72475	8:01	17:23	CON	N-34	15:24:17	15:32:11	I	
11/12/2013	47.75235	122.72475	8:01	17:23	CON	N-35	15:58:53	16:05:10	I	
11/12/2013	47.75235	122.72475	8:01	17:23	CON	N-33	16:16:29	16:22:58	I	
11/12/2013	47.75235	122.72475	8:01	17:23	POST		16:23:00	16:53:00	NONE	
11/13/2013	47.75171	122.7246	8:04	16:05	PRE		8:04:00	8:34:00	NONE	
11/13/2013	47.75171	122.7246	8:04	16:05	CON	VX-48	8:47:44	8:55:25	V	
11/13/2013	47.75171	122.7246	8:04	16:05	CON	VX-48	8:56:53	8:57:00	V	
11/13/2013	47.75195	122.72507	8:04	16:05	CON	J-27	11:01:33	11:01:35	SSI	
11/13/2013	47.75195	122.72507	8:04	16:05	CON	J-27	11:02:33	11:02:35	SSI	
11/13/2013	47.75195	122.72507	8:04	16:05	CON	J-27	11:03:32	11:03:34	SSI	
11/13/2013	47.75195	122.72507	8:04	16:05	CON	J-27	11:04:28	11:08:14	I	
11/13/2013	47.75195	122.72507	8:04	16:05	CON	M-27	11:20:16	11:23:41	I	
11/13/2013	47.75195	122.72507	8:04	16:05	CON	M-27	11:26:53	11:27:29	I	
11/13/2013	47.75195	122.72507	8:04	16:05	CON	R-27	11:52:53	11:56:58	I	
11/13/2013	47.75268	122.7243	14:40	15:32	CON	Temp-1	14:44:55	14:47:18	V	Out
11/13/2013	47.75268	122.7243	14:40	15:32	CON	Temp-1	14:50:46	14:53:09	V	Out
11/13/2013	47.75268	122.7243	14:40	15:32	CON	Temp-1	14:53:36	14:53:48	V	Out
11/13/2013	47.75268	122.7243	14:40	15:32	CON	Temp-1	15:07:17	15:07:40	V	In
11/13/2013	47.75268	122.7243	14:40	15:32	MS	Temp-1	15:09:48	15:12:47	NONE	In MS
11/13/2013	47.75268	122.7243	14:40	15:32	CON	Temp-1	15:11:56	15:20:33	V	In, sealpup at 3:15:00 pm
11/13/2013	47.75171	122.7246	8:04	16:05	CON	VX-48	15:13:37	15:13:39	SSI	
11/13/2013	47.75171	122.7246	8:04	16:05	CON	VX-48	15:14:29	15:14:31	SSI	
11/13/2013	47.75171	122.7246	8:04	16:05	CON	VX-48	15:15:20	15:15:24	SSI	
11/13/2013	47.75171	122.7246	8:04	16:05	CON	VX-48	15:16:09	15:35:37	I	
11/13/2013	47.75268	122.7243	14:40	15:32	CON	Temp-1	15:21:16	15:23:52	V	In
11/13/2013	47.75268	122.7243	14:40	15:32	CON	Temp-1	15:24:47	15:24:49	V	In
11/13/2013	47.75268	122.7243	14:40	15:32	CON	Temp-1	15:25:09	15:25:15	V	In
11/13/2013	47.75268	122.7243	14:40	15:32	CON	Temp-1	15:26:03	15:26:07	V	
11/13/2013	47.75171	122.7246	8:04	16:05	POST		15:35:00	16:05:00	NONE	
11/14/2013	47.75159	122.72525	8:30	17:01	PRE		8:30:00	8:45:00	NONE	
11/14/2013	47.75159	122.72525	8:30	17:01	CON	J-21	13:59:22	13:59:24	SSI	
11/14/2013	47.75159	122.72525	8:30	17:01	CON	J-21	14:00:15	14:00:17	SSI	
11/14/2013	47.75159	122.72525	8:30	17:01	CON	J-21	14:01:07	14:01:08	SSI	
11/14/2013	47.75159	122.72525	8:30	17:01	CON	J-21	14:02:01	14:08:45	I	
11/14/2013	47.75159	122.72525	8:30	17:01	CON	J-21	14:10:28	14:15:37	I	

Date	Latitude	Longitude	Time Effort Initiated	Time Effort Completed	Event Code	Pile	Start Time	End Time	Const Type	Comments
11/14/2013	47.75159	122.72525	8:30	17:01	CON	M-21	14:34:31	14:40:23	I	
11/14/2013	47.75159	122.72525	8:30	17:01	CON	R-21	14:54:07	14:57:14	I	
11/14/2013	47.75159	122.72525	8:30	17:01	MS	R-21	14:57:14	15:02:30	NONE	saw seal 45 m ne of pile
11/14/2013	47.75159	122.72525	8:30	17:01	CON	R-21	15:03:11	15:04:15	I	
11/14/2013	47.75159	122.72525	8:30	17:01	MS	R-21	15:04:17	15:17:02	NONE	saw seal 60 m sw of pile
11/14/2013	47.75159	122.72525	8:30	17:01	CON	R-21	15:18:47	15:20:54	I	
11/14/2013	47.75159	122.72525	8:30	17:01	CON	R-21	15:24:01	15:28:56	I	317+65 blows total -lost count
11/14/2013	47.75159	122.72525	8:30	17:01	CON	R-22	15:43:57	15:52:02	I	
11/14/2013			8:30	16:31	CON	VX-46	15:50:44	16:31:00	V	
11/14/2013	47.75159	122.72525	8:30	17:01	POST		16:31:21	17:01:42	NONE	
11/15/2013	47.75159	122.72525	8:00	15:50	PRE		8:00:00	8:15:00	NONE	
11/15/2013	47.75159	122.72525	8:00	15:50	CON	J-22	8:41:21	8:41:23	SSI	
11/15/2013	47.75159	122.72525	8:00	15:50	CON	J-22	8:42:29	8:42:31	SSI	
11/15/2013	47.75159	122.72525	8:00	15:50	CON	J-22	8:43:20	8:43:21	SSI	
11/15/2013	47.75159	122.72525	8:00	15:50	CON	J-22	8:44:49	8:50:36	I	
11/15/2013	47.75159	122.72525	8:00	15:50	CON	M-22	9:04:55	9:10:05	I	
11/15/2013	47.75159	122.72525	8:00	15:50	CON	M-22	9:12:09	9:18:36	I	
11/15/2013	47.75159	122.72525	8:00	15:50	CON	J-21	9:32:39	9:38:12	I	
11/15/2013	47.75149	122.72449	8:00	15:50	CON	VX-46	15:09:08	15:09:10	SSI	
11/15/2013	47.75149	122.72449	8:00	15:50	CON	VX-46	15:09:48	15:09:49	SSI	
11/15/2013	47.75149	122.72449	8:00	15:50	CON	VX-46	15:10:28	15:10:29	SSI	
11/15/2013	47.75149	122.72449	8:00	15:50	CON	VX-46	15:11:10	15:16:53	I	
11/15/2013	47.75149	122.72449	8:00	15:50	CON	VX-46	15:19:22	15:20:01	I	
11/15/2013	47.75149	122.72449	8:00	15:50	POST		15:20:01	15:50:01	NONE	
11/16/2013	47.7519	122.72442	8:00	16:23	PRE		8:00:00	8:15:00	NONE	
11/16/2013	47.7519	122.72442	8:00	16:23	CON	VX-45	13:16:59	13:24:54	V	
11/16/2013	47.7519	122.72442	8:00	16:23	CON	VX-45	13:34:55	13:45:52	V	
11/16/2013	47.7519	122.72442	8:00	16:23	CON	VX-45	13:49:52	13:49:53	V	broke hammer off pile
11/16/2013	47.7519	122.72442	8:00	16:23	CON	VX-45	15:34:29	15:34:31	SSI	2 blows
11/16/2013	47.7519	122.72442	8:00	16:23	CON	VX-45	15:35:18	15:35:19	SSI	2 blows
11/16/2013	47.7519	122.72442	8:00	16:23	CON	VX-45	15:36:09	15:36:10	SSI	2 blows
11/16/2013	47.7519	122.72442	8:00	16:23	CON	VX-45	15:36:59	15:40:00	I	120 blows shut down for seal in shutdown zone 8 m
11/16/2013	47.7519	122.72442	8:00	16:23	MS		15:40:00	15:45:52	NONE	
11/16/2013	47.7519	122.72442	8:00	16:23	CON	VX-45	15:45:52	15:51:12	I	206 blows
11/16/2013	47.7519	122.72442	8:00	16:23	CON	VX-45	15:52:30	15:52:58	I	19 blows
11/16/2013	47.7519	122.72442	8:00	16:23	POST		15:53:18	16:23:18	NONE	
11/18/2013	47.7519	122.72442	9:00	15:52	PRE		9:00:00	9:30:00	NONE	
11/18/2013	47.7519	122.72442	9:00	15:52	CON	VX-47	15:09:50	15:21:11	V	
11/18/2013	47.7519	122.72442	9:00	15:52	POST		15:22:00	15:52:00	NONE	

Date	Latitude	Longitude	Time Effort Initiated	Time Effort Completed	Event Code	Pile	Start Time	End Time	Const Type	Comments
11/19/2013	47.7517	122.72438	8:15	15:28	CON	VX-47	8:48:23	8:48:47	SSI	
11/19/2013	47.7517	122.72438	8:15	15:28	CON	VX-47	8:49:03	8:49:06	SSI	
11/19/2013	47.7517	122.72438	8:15	15:28	CON	VX-47	8:49:52	8:49:53	SSI	
11/19/2013	47.7517	122.72438	8:15	15:28	CON	VX-47	8:50:30	8:58:00	I	
11/19/2013	47.7517	122.72438	8:15	15:28	CON	X.8-42	14:50:03	14:50:16	SSI	
11/19/2013	47.7517	122.72438	8:15	15:28	CON	X.8-42	14:50:47	14:50:48	SSI	
11/19/2013	47.7517	122.72438	8:15	15:28	CON	X.8-42	14:51:32	14:51:34	SSI	
11/19/2013	47.7517	122.72438	8:15	15:28	CON	X.8-42	14:52:10	14:57:41	I	
11/20/2013	47.75119	122.72451	8:05	15:52	CON	V-15	10:06:18	10:06:19	SSI	
11/20/2013	47.75119	122.72451	8:05	15:52	CON	V-15	10:07:19	10:07:20	SSI	
11/20/2013	47.75119	122.72451	8:05	15:52	CON	V-15	10:08:14	10:08:15	SSI	
11/20/2013	47.75119	122.72451	8:05	15:52	CON	V-15	10:09:20	10:17:07	I	
11/20/2013	47.75119	122.72451	8:05	15:52	CON	X-15	10:39:51	10:43:30	I	
11/20/2013	47.75119	122.72451	8:05	15:52	CON	X-14	11:02:34	11:04:44	I	
11/20/2013	47.75119	122.72451	8:05	15:52	CON	V-14	11:15:42	11:22:52	I	
11/20/2013	47.75119	122.72451	8:05	15:52	CON	X-14	11:41:07	11:44:45	I	
11/20/2013	47.75119	122.72451	8:05	15:52	CON	V-13	12:03:52	12:07:32	I	
11/20/2013	47.75119	122.72451	8:05	15:52	CON	X-13	13:04:47	13:06:31	SSI	
11/20/2013	47.75119	122.72451	8:05	15:52	CON	X-13	13:07:00	13:10:48	I	
11/20/2013	47.75119	122.72451	8:05	15:52	CON	X-12	13:29:20	13:32:50	I	
11/20/2013	47.75201	122.72425	8:05	15:52	CON	VX-58	14:46:03	15:12:00	V	
11/21/2013	47.75145	122.72401	8:37	15:05	PRE		8:37:13	9:07:39	NONE	
11/21/2013	47.75145	122.72401	8:37	15:05	CON	V-10	9:24:22	9:24:23	SSI	
11/21/2013	47.75145	122.72401	8:37	15:05	CON	V-10	9:25:25	9:25:26	SSI	
11/21/2013	47.75145	122.72401	8:37	15:05	CON	V-10	9:26:30	9:26:31	SSI	
11/21/2013	47.75145	122.72401	8:37	15:05	CON	V-10	9:27:20	9:30:10	I	
11/21/2013	47.75145	122.72401	8:37	15:05	MS		9:31:05	9:38:15	NONE	Shut down, HSEA in zone
11/21/2013	47.75145	122.72401	8:37	15:05	CON	V-10	9:38:15	9:42:05	I	
11/21/2013	47.75145	122.72401	8:37	15:05	MS		9:42:05	9:46:44	NONE	Shut down, HSEA in zone
11/21/2013	47.75145	122.72401	8:37	15:05	CON	V-10	9:46:44	9:47:55	I	
11/21/2013	47.75145	122.72401	8:37	15:05	CON	V-12	10:04:55	10:08:10	I	
11/21/2013	47.75145	122.72401	8:37	15:05	MS		10:08:10	10:13:12	NONE	Shut down, HSEA in zone
11/21/2013	47.75145	122.72401	8:37	15:05	CON	V-12	10:13:12	10:18:32	I	
11/21/2013	47.75145	122.72401	8:37	15:05	CON	V-11	10:47:37	10:51:02	I	
11/21/2013	47.75145	122.72401	8:37	15:05	CON	X-11	11:00:12	11:05:01	I	
11/21/2013	47.75145	122.72401	8:37	15:05	CON	X-10	11:15:51	11:19:13	I	
11/21/2013	47.75145	122.72401	8:37	15:05	CON	X-9	11:34:25	11:37:42	I	
11/21/2013	47.75145	122.72401	8:37	15:05	CON	V-9	11:56:12	11:59:51	I	
11/21/2013	47.75145	122.72401	8:37	15:05	CON	VX-60	14:12:43	14:35:22	V	Batter pile
11/21/2013	47.75145	122.72401	8:37	15:05	POST		14:36:44	15:05:29	NONE	

Date	Latitude	Longitude	Time Effort Initiated	Time Effort Completed	Event Code	Pile	Start Time	End Time	Const Type	Comments
11/22/2013	47.75137	122.72453	10:00	15:20	PRE		10:00:00	10:30:00	NONE	
11/22/2013	47.75137	122.72453	10:00	15:20	CON	VX-60	10:48:53	10:48:54	SSI	
11/22/2013	47.75137	122.72453	10:00	15:20	CON	VX-60	10:49:30	10:49:32	SSI	
11/22/2013	47.75137	122.72453	10:00	15:20	CON	VX-60	10:50:17	10:50:20	SSI	
11/22/2013	47.75137	122.72453	10:00	15:20	CON	VX-60	10:51:03	11:03:28	I	
11/23/2013	47.75137	122.72453	7:45	14:49	PRE		7:45:00	8:15:00	NONE	
11/23/2013	47.75202	122.72453	7:45	14:49	CON	VX-59	8:36:56	9:03:27	V	
11/23/2013	47.75137	122.72453	7:45	14:49	CON	VX-49	14:05:09	14:05:10	SSI	
11/23/2013	47.75137	122.72453	7:45	14:49	CON	VX-49	14:05:51	14:05:53	SSI	
11/23/2013	47.75137	122.72453	7:45	14:49	CON	VX-49	14:06:29	14:06:31	SSI	
11/23/2013	47.75137	122.72453	7:45	14:49	CON	VX-49	14:07:10	14:16:46	I	
11/23/2013	47.75137	122.72453	7:45	14:49	MS	VX-49	14:16:46	14:18:18	NONE	
11/23/2013	47.75137	122.72453	7:45	14:49	CON	VX-49	14:18:18	14:19:10	I	
11/23/2013	47.75137	122.72453	7:45	14:49	POST		14:19:00	14:49:00	NONE	
11/25/2013	47.75218	122.72449	9:00	13:43	CON	VX-57	12:45:45	13:11:16	V	Batter 4 OF 4
11/25/2013	47.75218	122.72449	9:00	13:43	POST		13:12:49	13:42:49	NONE	
11/25/2013	47.75218	122.72449	9:00	13:43	PRE		20:30:00	21:00:00	NONE	
11/26/2013	47.75193	122.72458	10:45	14:05	PRE		10:45:22	11:15:30	NONE	
11/26/2013	47.75193	122.72458	10:45	14:05	CON	VX-50	13:04:02	13:35:12	V	
11/26/2013	47.75193	122.72458	10:45	14:05	POST		13:35:38	14:05:57	NONE	
11/27/2013			14:20	15:37	PRE		14:20:00	14:35:00	NONE	
12/2/2013	47.75267	122.72483	10:10	13:39	PRE		10:10:00	10:40:00	NONE	
12/2/2013	47.75267	122.72483	10:10	13:39	CON	N-9	10:42:08	10:43:03	V	
12/2/2013	47.75267	122.72483	10:10	13:39	CON	N-9	10:46:00	10:55:32	V	
12/2/2013	47.75267	122.72483	10:10	13:39	CON	N-9	10:58:59	10:59:15	V	
12/2/2013	47.75267	122.72483	10:10	13:39	POST		13:09:38	13:39:37	NONE	
12/3/2013	47.75191	122.72453	10:11	15:00	PRE		10:11:31	10:26:38	NONE	
12/3/2013	47.75191	122.72453	10:11	15:00	CON	VX-49	10:43:30	11:28:16	V	
12/3/2013	47.75191	122.72453	10:11	15:00	POST		14:30:00	15:00:00	NONE	
12/4/2013	47.7513	122.72466	8:15	15:27	PRE		8:15:23	8:46:06	NONE	
12/4/2013	47.7513	122.72466	8:15	15:27	CON	T-19	9:13:07	9:13:10	SSI	
12/4/2013	47.7513	122.72466	8:15	15:27	CON	T-19	9:14:12	9:14:14	SSI	
12/4/2013	47.7513	122.72466	8:15	15:27	CON	T-19	9:15:11	9:15:13	SSI	
12/4/2013	47.7513	122.72466	8:15	15:27	CON	T-19	9:16:11	9:19:20	I	
12/4/2013	47.7513	122.72466	8:15	15:27	CON	T-20	9:47:46	9:48:34	I	
12/4/2013	47.7513	122.72466	8:15	15:27	CON	T-20	9:50:28	9:57:22	I	
12/4/2013	47.7513	122.72466	8:15	15:27	CON	T-21	10:22:49	10:31:26	I	
12/4/2013	47.7513	122.72466	8:15	15:27	CON	T-16	11:17:36	11:17:38	SSI	
12/4/2013	47.7513	122.72466	8:15	15:27	CON	T-16	11:18:35	11:18:36	SSI	
12/4/2013	47.7513	122.72466	8:15	15:27	CON	T-16	11:19:37	11:26:46	I	shut down, lost track of count

Date	Latitude	Longitude	Time Effort Initiated	Time Effort Completed	Event Code	Pile	Start Time	End Time	Const Type	Comments
12/4/2013	47.7513	122.72466	8:15	15:27	MS		11:26:49	11:30:46	NONE	
12/4/2013	47.7513	122.72466	8:15	15:27	CON	T-16	11:31:38	11:38:40	I	no blow count, no berger guys
12/4/2013	47.7513	122.72466	8:15	15:27	CON	T-16	11:42:29	11:42:30	SSI	
12/4/2013	47.7513	122.72466	8:15	15:27	CON	T-16	11:43:31	11:46:33	I	
12/4/2013			8:15	15:27	CON	VX-52	13:37:10	14:05:02	V	
12/4/2013			8:15	15:27	CON	VX-52	13:49:02	14:05:03	V	
12/4/2013			8:15	15:27	CON	VX-52	13:49:20	14:05:21	V	
12/4/2013	47.7513	122.72466	8:15	15:27	CON	T-9	14:04:30	14:04:31	SSI	
12/4/2013	47.7513	122.72466	8:15	15:27	CON	T-9	14:05:27	14:05:28	SSI	
12/4/2013	47.7513	122.72466	8:15	15:27	CON	T-9	14:06:30	14:06:32	SSI	
12/4/2013	47.7513	122.72466	8:15	15:27	CON	T-9	14:07:28	14:08:30	I	
12/4/2013	47.7513	122.72466	8:15	15:27	CON	T-9	14:10:33	14:13:46	I	
12/4/2013	47.7513	122.72466	8:15	15:27	CON	T-8	14:29:37	14:30:53	I	
12/4/2013	47.7513	122.72466	8:15	15:27	CON	T-8	14:34:10	14:35:10	I	
12/4/2013	47.7513	122.72466	8:15	15:27	CON	X-8	14:48:38	14:56:21	I	
12/4/2013	47.7513	122.72466	8:15	15:27	POST		14:56:22	15:27:42	NONE	
12/5/2013	47.75208	122.72431	8:15	16:00	PRE		8:25:00	8:55:51	NONE	
12/5/2013	47.75208	122.72431	8:15	16:00	CON	VX-52	11:25:49	11:25:50	SSI	
12/5/2013	47.75208	122.72431	8:15	16:00	CON	VX-52	11:26:46	11:26:47	SSI	Seal in 20m zone, saw 30m east of rig within 5 min
12/5/2013	47.75208	122.72431	8:15	16:00	MS	VX-52	11:26:49	11:28:47	NONE	
12/5/2013	47.75208	122.72431	8:15	16:00	CON	VX-52	11:29:28	11:29:29	SSI	
12/5/2013	47.75208	122.72431	8:15	16:00	CON	VX-52	11:30:10	11:47:11	I	
12/5/2013	47.75208	122.72431	8:15	16:00	POST		15:30:25	16:00:26	NONE	
12/6/2013			8:30	15:15	PRE		8:30:47	9:03:49	NONE	
12/6/2013			8:30	15:15	CON	N-11	9:39:20	9:39:40	V	south pile of cluster between bents 31 and 32
12/6/2013			8:30	15:15	CON	N-11	9:42:58	9:47:33	V	
12/6/2013			8:30	15:15	POST		14:45:00	15:15:21	NONE	
12/7/2013	47.75205	222.72449	8:20	12:35	PRE		8:20:00	8:40:34	NONE	
12/7/2013	47.75205	222.72449	8:20	12:35	CON	VX-51	8:40:44	8:57:40	V	
12/7/2013	47.75205	222.72449	8:20	12:35	CON	VX-51	11:47:04	11:47:05	SSI	
12/7/2013	47.75205	222.72449	8:20	12:35	CON	VX-51	11:47:45	11:47:46	SSI	
12/7/2013	47.75205	222.72449	8:20	12:35	CON	VX-51	11:48:24	11:48:25	SSI	
12/7/2013	47.75205	222.72449	8:20	12:35	CON	VX-51	11:49:05	12:03:02	I	
12/7/2013	47.75205	222.72449	8:20	12:35	POST		12:03:07	12:33:09	NONE	
12/9/2013			12:30	15:50	PRE		12:30:00	13:00:08	NONE	no pile driving activity
12/9/2013			12:30	15:50	CON	V-7	14:16:24	14:16:25	SSI	
12/9/2013			12:30	15:50	CON	V-7	14:17:27	14:17:28	SSI	
12/9/2013			12:30	15:50	CON	V-7	14:18:22	14:18:23	SSI	

Date	Latitude	Longitude	Time Effort Initiated	Time Effort Completed	Event Code	Pile	Start Time	End Time	Const Type	Comments
12/9/2013			12:30	15:50	CON	V-7	14:19:19	14:19:20	I	
12/9/2013			12:30	15:50	CON	V-7	14:20:15	14:24:11	I	
12/9/2013			12:30	15:50	CON	X-7	14:37:41	14:41:08	I	
12/9/2013			12:30	15:50	CON	X-6	14:53:49	14:59:28	I	
12/9/2013			12:30	15:50	POST		15:40:07	15:40:06	NONE	
12/10/2013	47.75189	122.72463	8:33	15:20	PRE		8:33:33	8:48:25	NONE	
12/10/2013	47.75189	122.72463	8:33	15:20	CON	VX-44	8:53:35	9:20:23	V	
12/10/2013	47.75067	122.72481	8:33	15:20	CON	V-6	9:38:18	9:38:24	SSI	SS1
12/10/2013	47.75067	122.72481	8:33	15:20	CON	V-6	9:39:17	9:39:18	SSI	SS2
12/10/2013	47.75067	122.72481	8:33	15:20	CON	V-6	9:40:17	9:40:18	SSI	SS3
12/10/2013	47.75067	122.72481	8:33	15:20	CON	V-6	9:41:18	9:45:30	I	
12/10/2013	47.75067	122.72481	8:33	15:20	CON	V-5	10:00:04	10:03:20	I	
12/10/2013	47.75067	122.72481	8:33	15:20	CON	X-5	10:16:24	10:19:41	I	
12/10/2013	47.75067	122.72481	8:33	15:20	CON	X-4	10:34:28	10:40:45	I	
12/10/2013	47.75067	122.72481	8:33	15:20	CON	V-4	10:53:08	10:56:27	I	
12/10/2013	47.75067	122.72481	8:33	15:20	CON	T-4	11:12:38	11:23:39	I	
12/10/2013	47.75067	122.72481	8:33	15:20	CON	T-4	11:27:53	11:31:17	I	
12/10/2013	47.75067	122.72481	8:33	15:20	CON	T-4	11:33:56	11:37:17	I	
12/10/2013	47.75246	122.72507	8:33	15:20	CON	VX-44	13:20:22	13:20:23	SSI	
12/10/2013	47.75246	122.72507	8:33	15:20	CON	VX-44	13:21:22	13:21:24	SSI	
12/10/2013	47.75246	122.72507	8:33	15:20	CON	VX-44	13:21:52	13:21:54	SSI	
12/10/2013	47.75246	122.72507	8:33	15:20	CON	VX-44	13:23:52	13:43:52	I	
12/10/2013	47.75246	122.72507	8:33	15:20	CON	N-10	13:57:37	14:15:51	V	
12/10/2013	47.75246	122.72507	8:33	15:20	CON	N-10	14:20:31	14:40:31	V	
12/10/2013	47.75246	122.72507	8:33	15:20	CON	N-10	14:41:26	14:45:28	V	
12/10/2013	47.75246	122.72507	8:33	15:20	CON	N-10	14:50:22	14:50:25	V	
12/11/2013	47.75249	122.72498	8:48	14:42	PRE		8:48:00	9:03:06	NONE	
12/11/2013	47.75249	122.72498	8:48	14:42	CON	Temp-1	10:36:13	10:36:46	V	Vibe Out of template
12/11/2013	47.75249	122.72498	8:48	14:42	CON	Temp-1	10:39:39	10:42:39	V	Vibe Out of template
12/11/2013	47.75249	122.72498	8:48	14:42	CON	Temp-1	10:56:57	11:10:02	V	Vibed into a temporary location
12/11/2013	47.75249	122.72498	8:48	14:42	CON	Temp-2	11:23:29	11:24:23	V	Vibe Out of template
12/11/2013	47.75249	122.72498	8:48	14:42	CON	Temp-2	11:24:42	11:26:08	V	Vibe Out of template
12/11/2013	47.75249	122.72498	8:48	14:42	CON	Temp-2	11:33:09	11:35:18	V	Vibe Out of template
12/11/2013	47.75183	122.72456	8:48	14:42	CON	VX-43	11:45:05	12:21:38	V	
12/11/2013	47.75249	122.72498	8:48	14:42	CON	Temp-2	11:54:16	11:56:59	V	Vibed into a temporary location
12/11/2013	47.75249	122.72498	8:48	14:42	POST		12:00:00	12:30:26	NONE	
12/12/2013			8:30	15:30	PRE		8:30:04	9:00:05	NONE	
12/12/2013			8:30	15:30	CON	VX-41	9:44:18	10:10:12	V	
12/12/2013			8:30	15:30	CON	N-11	11:47:24	11:47:26	SSI	
12/12/2013			8:30	15:30	CON	N-11	11:48:47	11:48:49	SSI	

Date	Latitude	Longitude	Time Effort Initiated	Time Effort Completed	Event Code	Pile	Start Time	End Time	Const Type	Comments
12/12/2013			8:30	15:30	CON	N-11	11:50:07	11:50:08	SSI	
12/12/2013			8:30	15:30	CON	N-11	11:51:30	11:56:12	I	
12/12/2013			8:30	15:30	CON	N-11	11:58:35	12:01:29	I	
12/13/2013	47.75176	122.72456	8:10	14:20	PRE		8:10:00	8:25:00	NONE	
12/13/2013	47.75176	122.72456	8:10	14:20	CON	VX-42	8:33:42	8:33:43	SSI	
12/13/2013	47.75176	122.72456	8:10	14:20	CON	VX-42	8:34:25	8:34:26	SSI	
12/13/2013	47.75176	122.72456	8:10	14:20	CON	VX-42	8:35:05	8:35:06	SSI	
12/13/2013	47.75176	122.72456	8:10	14:20	CON	VX-42	8:35:46	8:50:41	I	
12/13/2013	47.75176	122.72456	8:10	14:20	POST		13:50:00	14:20:00	NONE	
12/14/2013	47.75106	122.72508	9:20	15:30	PRE		9:20:00	9:35:00	NONE	
12/14/2013	47.75106	122.72508	9:20	15:30	CON	VX-41	10:01:34	10:12:19	V	
12/14/2013	47.75106	122.72508	9:20	15:30	MS	VX-41	10:12:19	10:18:20	NONE	juv seal seen 6 m sw of pile; then spotted 60 m ssw of pile
12/14/2013	47.75106	122.72508	9:20	15:30	CON	VX-41	10:18:56	10:29:17	V	
12/14/2013	47.75106	122.72508	9:20	15:30	CON	VX-41	10:32:38	10:33:34	V	
12/14/2013	47.75106	122.72508	9:20	15:30	CON	VX-41	14:01:19	14:01:20	SSI	
12/14/2013	47.75106	122.72508	9:20	15:30	CON	VX-41	14:01:52	14:01:53	SSI	
12/14/2013	47.75106	122.72508	9:20	15:30	CON	VX-41	14:02:29	14:02:31	SSI	
12/14/2013	47.75106	122.72508	9:20	15:30	CON	VX-41	14:03:06	14:10:43	I	
12/16/2013	47.75262	122.7253	13:30	16:03	PRE		13:30:00	14:00:00	NONE	
12/16/2013	47.75262	122.7253	13:30	16:03	CON	N-12	14:47:21	14:47:54	V	
12/16/2013	47.75262	122.7253	13:30	16:03	CON	N-12	14:48:43	15:31:39	V	
12/16/2013	47.75262	122.7253	13:30	16:03	POST		15:33:23	16:03:18	NONE	
12/17/2013	47.75158	122.72427	10:10	16:03	PRE		10:10:27	10:41:10	NONE	
12/17/2013	47.75158	122.72427	10:10	16:03	CON	VX-37	11:41:48	11:51:29	V	
12/17/2013	47.75158	122.72427	10:10	16:03	CON	VX-37	11:53:04	12:05:21	V	
12/17/2013	47.75158	122.72427	10:10	16:03	CON	VX-37	14:33:50	14:33:51	SSI	
12/17/2013	47.75158	122.72427	10:10	16:03	CON	VX-37	14:34:32	14:34:33	SSI	
12/17/2013	47.75158	122.72427	10:10	16:03	CON	VX-37	14:35:14	14:35:15	SSI	
12/17/2013	47.75158	122.72427	10:10	16:03	CON	VX-37	14:35:58	14:57:15	I	
12/17/2013	47.75158	122.72427	10:10	16:03	POST		15:36:01	15:29:03	NONE	Found dead 1st winter male SUSC.
12/18/2013	47.75175	122.72446	9:10	15:33	PRE		9:10:10	9:40:11	NONE	
12/18/2013	47.75175	122.72446	9:10	15:33	CON	VX-39	14:22:10	14:23:54	V	
12/18/2013	47.75175	122.72446	9:10	15:33	CON	VX-39	14:25:29	15:02:12	V	
12/18/2013	47.75175	122.72446	9:10	15:33	POST		15:03:06	15:33:07	NONE	
12/19/2013	47.75151	122.72472	7:55	16:22	PRE		7:55:00	8:25:00	NONE	
12/19/2013	47.75151	122.72472	7:55	16:22	CON	VX-39	8:52:36	8:52:38	SSI	
12/19/2013	47.75151	122.72472	7:55	16:22	CON	VX-39	8:53:19	8:53:20	SSI	
12/19/2013	47.75151	122.72472	7:55	16:22	CON	VX-39	8:54:01	8:54:03	SSI	
12/19/2013	47.75151	122.72472	7:55	16:22	CON	VX-39	8:54:40	9:02:24	I	

Date	Latitude	Longitude	Time Effort Initiated	Time Effort Completed	Event Code	Pile	Start Time	End Time	Const Type	Comments
12/19/2013	47.75151	122.72472	7:55	16:22	CON	VX-38	15:28:20	15:52:28	V	
12/19/2013	47.75151	122.72472	7:55	16:22	POST		15:52:37	16:22:00	NONE	
12/21/2013	47.75151	122.72472	8:15	15:58	PRE		8:15:00	8:45:00	NONE	
12/21/2013	47.75151	122.72472	8:15	15:58	CON	VX-38	10:44:21	10:44:22	SSI	bubble pile
12/21/2013	47.75151	122.72472	8:15	15:58	CON	VX-38	10:45:01	10:45:02	SSI	
12/21/2013	47.75151	122.72472	8:15	15:58	CON	VX-38	10:45:42	10:45:43	SSI	
12/21/2013	47.75151	122.72472	8:15	15:58	CON	VX-38	10:46:24	10:58:36	I	
12/21/2013	47.75151	122.72472	8:15	15:58	CON	VX-40	15:11:50	15:27:53	V	
12/21/2013	47.75151	122.72472	8:15	15:58	POST		15:28:00	15:58:00	NONE	
12/23/2013	47.75166	122.72459	8:27	12:06	PRE		8:27:03	8:57:29	NONE	
12/23/2013	47.75166	122.72459	8:27	12:06	CON	VX-40	9:00:50	9:00:51	SSI	west batter pile
12/23/2013	47.75166	122.72459	8:27	12:06	CON	VX-40	9:01:34	9:01:35	SSI	
12/23/2013	47.75166	122.72459	8:27	12:06	CON	VX-40	9:02:14	9:02:15	SSI	
12/23/2013	47.75166	122.72459	8:27	12:06	CON	VX-40	9:02:54	9:11:25	I	
12/23/2013			12:07	16:28	CON	J-3	14:54:59	14:55:01	SSI	
12/23/2013			12:07	16:28	CON	J-3	14:56:12	14:56:13	SSI	
12/23/2013			12:07	16:28	CON	J-3	14:57:15	14:57:16	SSI	
12/23/2013			12:07	16:28	CON	J-3	15:03:25	15:03:26	I	
12/23/2013			12:07	16:28	CON	J-3	15:04:26	15:15:02	I	
12/23/2013			12:07	16:28	CON	J-2	15:47:25	15:47:26	SSI	
12/23/2013			12:07	16:28	CON	J-2	15:48:24	15:48:26	SSI	
12/23/2013			12:07	16:28	CON	J-2	15:49:28	15:49:29	SSI	
12/23/2013			12:07	16:28	CON	J-2	15:50:27	15:58:03	I	
12/23/2013			12:07	16:28	POST		15:58:08	16:28:00	NONE	
12/24/2013	47.75171	122.72454	8:11	11:37	PRE		8:11:50	8:26:50	NONE	
12/24/2013	47.75171	122.72454	8:11	11:37	CON	J-1	8:27:31	8:27:32	SSI	
12/24/2013	47.75171	122.72454	8:11	11:37	CON	J-1	8:28:38	8:28:39	SSI	
12/24/2013	47.75171	122.72454	8:11	11:37	CON	J-1	8:29:45	8:29:46	SSI	
12/24/2013	47.75171	122.72454	8:11	11:37	CON	J-1	8:30:53	8:37:10	I	
12/24/2013	47.75171	122.72454	8:11	11:37	CON	M-3	8:53:58	9:12:58	I	
12/24/2013	47.75171	122.72454	8:11	11:37	CON	M-1	10:31:39	10:31:40	SSI	
12/24/2013	47.75171	122.72454	8:11	11:37	CON	M-1	10:32:54	10:32:57	SSI	
12/24/2013	47.75171	122.72454	8:11	11:37	CON	M-1	10:34:08	10:34:10	SSI	
12/24/2013	47.75171	122.72454	8:11	11:37	CON	M-1	10:35:20	10:47:30	I	
12/24/2013	47.75171	122.72454	8:11	11:37	CON	M-2	10:52:50	10:57:43	I	
12/24/2013	47.75171	122.72454	8:11	11:37	CON	R-3	10:58:43	11:06:58	I	
12/24/2013	47.75171	122.72454	8:11	11:37	POST		11:07:00	11:37:00	NONE	
12/27/2013	47.75243	122.72521	8:30	15:17	PRE		8:30:00	9:00:00	NONE	
12/27/2013	47.75021	122.72525	8:30	15:17	CON	R-2	13:36:35	13:36:38	SSI	
12/27/2013	47.75021	122.72525	8:30	15:17	CON	R-2	13:37:35	13:37:36	SSI	

Date	Latitude	Longitude	Time Effort Initiated	Time Effort Completed	Event Code	Pile	Start Time	End Time	Const Type	Comments
12/27/2013	47.75021	122.72525	8:30	15:17	CON	R-2	13:38:28	13:38:29	SSI	
12/27/2013	47.75021	122.72525	8:30	15:17	CON	R-2	13:39:34	13:39:36	I	
12/27/2013	47.75021	122.72525	8:30	15:17	CON	R-2	13:40:35	13:47:55	I	
12/27/2013	47.75243	122.72521	8:30	15:17	CON	N-6	14:05:26	14:33:45	V	
12/27/2013	47.75021	122.72525	8:30	15:17	CON	R-1	14:15:33	14:28:12	I	
12/27/2013	47.75021	122.72525	8:30	15:17	CON	R-1	14:33:27	14:47:42	I	
12/27/2013	47.75243	122.72521	8:30	15:17	POST		14:47:00	15:17:00	NONE	
12/28/2013	47.75025	122.72511	8:00	16:30	PRE		8:00:00	8:30:00	NONE	
12/28/2013	47.75025	122.72511	8:00	16:30	CON	T-3	10:12:07	10:12:09	SSI	
12/28/2013	47.75025	122.72511	8:00	16:30	CON	T-3	10:13:04	10:13:06	SSI	
12/28/2013	47.75025	122.72511	8:00	16:30	CON	T-3	10:14:04	10:14:05	SSI	
12/28/2013	47.75025	122.72511	8:00	16:30	CON	T-3	10:15:01	10:26:12	I	
12/28/2013	47.75025	122.72511	8:00	16:30	CON	V-1	10:45:58	11:05:04	I	
12/28/2013	47.75025	122.72511	8:00	16:30	CON	T-2	11:22:21	11:36:02	I	
12/28/2013	47.75025	122.72511	8:00	16:30	CON	T-1	12:39:15	12:39:17	SSI	
12/28/2013	47.75025	122.72511	8:00	16:30	CON	T-1	12:40:08	12:40:11	SSI	
12/28/2013	47.75025	122.72511	8:00	16:30	CON	T-1	12:41:03	12:41:05	SSI	
12/28/2013	47.75025	122.72511	8:00	16:30	CON	T-1	12:41:54	12:54:30	I	
12/28/2013	47.75025	122.72511	8:00	16:30	CON	V-2	13:09:01	13:25:08	I	
12/28/2013	47.75025	122.72511	8:00	16:30	CON	V-3	13:49:52	14:02:27	I	
12/28/2013	47.75025	122.72511	8:00	16:30	CON	V-3	14:06:12	14:09:31	I	
12/28/2013	47.75025	122.72511	8:00	16:30	CON	X-3	14:22:13	14:41:12	I	
12/28/2013	47.75025	122.72511	8:00	16:30	CON	X-2	14:59:39	15:21:21	I	
12/28/2013	47.75025	122.72511	8:00	16:30	CON	X-1	15:41:15	16:00:15	I	
12/28/2013	47.75025	122.72511	8:00	16:30	POST		16:00:00	16:30:00	NONE	
12/30/2013			9:00	14:30	PRE		9:00:02	9:30:04	NONE	
12/30/2013			9:00	14:30	CON	N-5	10:49:09	10:58:01	V	
12/30/2013			9:00	14:30	CON	N-5	10:58:46	10:59:14	V	
12/30/2013			9:00	14:30	POST		14:00:00	14:30:51	NONE	
12/31/2013	47.75061	122.72615	8:00	14:42	PRE		8:00:20	8:30:21	NONE	
12/31/2013	47.75061	122.72615	8:00	14:42	CON	A-3	10:28:19	10:28:20	SSI	
12/31/2013	47.75061	122.72615	8:00	14:42	CON	A-3	10:29:14	10:29:15	SSI	
12/31/2013	47.75061	122.72615	8:00	14:42	CON	A-3	10:30:10	10:30:11	SSI	
12/31/2013	47.75061	122.72615	8:00	14:42	CON	A-3	10:31:03	10:40:49	I	
12/31/2013	47.75061	122.72615	8:00	14:42	CON	A-3	10:44:55	10:48:52	I	
12/31/2013	47.75061	122.72615	8:00	14:42	CON	A-3	10:53:30	10:56:46	I	
12/31/2013	47.75061	122.72615	8:00	14:42	CON	B-3	11:20:24	11:33:35	I	
12/31/2013	47.75061	122.72615	8:00	14:42	CON	B-3	11:37:23	11:47:02	I	
12/31/2013	47.75203	122.72527	11:01	13:47	CON	N-7	12:39:18	13:16:24	V	
12/31/2013	47.75172	122.72442	8:00	14:42	CON	VX-35	12:40:59	13:14:48	V	

Date	Latitude	Longitude	Time Effort Initiated	Time Effort Completed	Event Code	Pile	Start Time	End Time	Const Type	Comments
12/31/2013	47.75203	122.72527	11:01	13:47	POST		13:17:00	13:47:00	NONE	
12/31/2013	47.75061	122.72615	8:00	14:42	CON	B-2	13:31:10	13:31:11	SSI	
12/31/2013	47.75061	122.72615	8:00	14:42	CON	B-2	13:32:04	13:32:05	SSI	
12/31/2013	47.75061	122.72615	8:00	14:42	CON	B-2	13:32:56	13:33:00	SSI	
12/31/2013	47.75061	122.72615	8:00	14:42	CON	B-2	13:33:50	13:46:36	I	
12/31/2013	47.75061	122.72615	8:00	14:42	CON	A-2	14:01:16	14:11:40	I	
12/31/2013	47.75061	122.72615	8:00	14:42	POST		14:11:48	14:42:15	NONE	
1/2/2014	47.75157	122.7246	8:25	16:38	PRE		8:25:00	8:55:00	NONE	
1/2/2014	47.75157	122.7246	8:25	16:38	CON	VX-35	9:08:27	9:08:29	SSI	
1/2/2014	47.75157	122.7246	8:25	16:38	CON	VX-35	9:09:21	9:09:22	SSI	
1/2/2014	47.75157	122.7246	8:25	16:38	CON	VX-35	9:09:55	9:09:56	SSI	
1/2/2014	47.75157	122.7246	8:25	16:38	CON	VX-35	9:10:39	9:10:44	I	
1/2/2014	47.75157	122.7246	8:25	16:38	CON	VX-35	9:11:28	9:12:39	I	
1/2/2014	47.75157	122.7246	8:25	16:38	CON	VX-35	9:13:48	9:19:26	I	
1/2/2014	47.75157	122.7246	8:25	16:38	CON	VX-35	9:24:24	9:29:40	I	
1/2/2014	47.75044	122.72565	8:25	16:38	CON	C-3	10:48:01	10:48:03	SSI	
1/2/2014	47.75044	122.72565	8:25	16:38	CON	C-3	10:48:51	10:48:53	SSI	
1/2/2014	47.75044	122.72565	8:25	16:38	CON	C-3	10:49:42	10:49:43	SSI	
1/2/2014	47.75044	122.72565	8:25	16:38	CON	C-3	10:50:38	11:02:06	I	
1/2/2014	47.75044	122.72565	8:25	16:38	CON	C-3	11:08:39	11:11:23	I	
1/2/2014	47.75044	122.72565	8:25	16:38	CON	B-4	12:02:01	12:02:07	SSI	
1/2/2014	47.75044	122.72565	8:25	16:38	CON	B-4	12:03:02	12:03:03	SSI	
1/2/2014	47.75044	122.72565	8:25	16:38	CON	B-4	12:03:47	12:03:49	SSI	
1/2/2014	47.75044	122.72565	8:25	16:38	CON	B-4	12:04:48	12:16:06	I	
1/2/2014	47.75044	122.72565	8:25	16:38	CON	B-4	12:19:34	12:23:00	I	
1/2/2014	47.75044	122.72565	8:25	16:38	CON	A-4	12:42:27	12:53:12	I	
1/2/2014	47.75044	122.72565	8:25	16:38	CON	C-2	13:10:34	13:25:15	I	
1/2/2014	47.75044	122.72565	8:25	16:38	CON	A-1	13:50:14	14:01:20	I	
1/2/2014	47.75044	122.72565	8:25	16:38	CON	B-1	14:15:38	14:16:19	I	
1/2/2014	47.75157	122.7246	8:25	16:38	CON	VX-33	14:21:13	14:44:52	V	
1/2/2014	47.75219	122.7253	8:25	16:38	CON	N-8	15:52:27	16:08:55	V	
1/2/2014	47.75157	122.7246	8:25	16:38	POST		16:08:00	16:38:00	NONE	
1/3/2014	47.75044	122.72565	8:30	15:16	PRE		8:58:17	8:58:18	NONE	
1/3/2014	47.75044	122.72565	8:30	15:16	CON	B-5	9:28:21	9:28:22	SSI	
1/3/2014	47.75044	122.72565	8:30	15:16	CON	B-5	9:29:10	9:29:11	SSI	
1/3/2014	47.75044	122.72565	8:30	15:16	CON	B-5	9:29:59	9:30:00	SSI	
1/3/2014	47.75044	122.72565	8:30	15:16	CON	B-5	9:30:53	9:40:04	I	
1/3/2014	47.75044	122.72565	8:30	15:16	CON	A-5	10:02:12	10:11:50	I	
1/3/2014	47.75044	122.72565	8:30	15:16	CON	A-5	10:22:06	10:25:39	I	
1/3/2014	47.75044	122.72565	8:30	15:16	CON	A-6	10:37:13	10:37:55	I	

Date	Latitude	Longitude	Time Effort Initiated	Time Effort Completed	Event Code	Pile	Start Time	End Time	Const Type	Comments
1/3/2014	47.75044	122.72565	8:30	15:16	CON	A-6	10:47:14	11:00:12	I	
1/3/2014	47.75044	122.72565	8:30	15:16	CON	B-6	11:10:54	11:20:54	I	
1/3/2014	47.75044	122.72565	8:30	15:16	CON	B-6	11:22:23	11:30:58	I	
1/3/2014	47.75044	122.72565	8:30	15:16	CON	B-7	11:44:44	11:52:57	I	
1/3/2014	47.75044	122.72565	8:30	15:16	CON	B-7	11:55:21	12:00:22	I	
1/3/2014	47.75044	122.72565	8:30	15:16	CON	B-7	12:04:36	12:08:01	I	
1/3/2014	47.75044	122.72565	8:30	15:16	CON	B-7	12:10:33	12:13:48	I	
1/3/2014	47.75219	122.7253	8:30	15:16	CON	N-8	13:17:45	13:17:46	SSI	bubble pile
1/3/2014	47.75219	122.7253	8:30	15:16	CON	N-8	13:19:00	13:19:01	SSI	
1/3/2014	47.75219	122.7253	8:30	15:16	CON	N-8	13:20:12	13:20:13	SSI	
1/3/2014	47.75219	122.7253	8:30	15:16	CON	N-8	13:21:44	13:22:29	I	
1/3/2014	47.75219	122.7253	8:30	15:16	CON	N-8	13:27:30	13:27:52	I	
1/3/2014			8:30	15:16	CON	VX-36	14:13:29	14:30:26	V	
1/3/2014			8:30	15:16	CON	VX-36	14:13:29	14:30:26	V	
1/3/2014			8:30	15:16	CON	VX-36	14:41:24	14:46:17	V	
1/3/2014			8:30	15:16	CON	VX-36	14:41:24	14:46:17	V	
1/3/2014	47.75044	122.72565	8:30	15:16	POST		14:46:00	15:16:00	NONE	
1/4/2014			8:30	15:48	PRE		8:30:00	9:00:00	NONE	
1/4/2014			8:30	15:48	CON	VX-36	9:13:13	9:13:14	SSI	
1/4/2014			8:30	15:48	CON	VX-36	9:13:54	9:13:55	SSI	
1/4/2014			8:30	15:48	CON	VX-36	9:14:36	9:14:37	SSI	
1/4/2014			8:30	15:48	CON	VX-36	9:15:14	9:29:53	I	5 stunned/dead herring
1/4/2014			8:30	15:48	CON	VX-34	14:41:13	15:18:24	V	
1/4/2014			8:30	15:48	POST		15:18:00	15:48:00	NONE	
1/6/2014			13:45	14:15	PRE		8:35:33	9:05:39	NONE	
1/6/2014			13:45	14:15	CON	VX-34	9:06:02	9:06:03	SSI	
1/6/2014			13:45	14:15	CON	VX-34	9:06:46	9:06:47	SSI	
1/6/2014			13:45	14:15	CON	VX-34	9:07:29	9:07:30	SSI	
1/6/2014			13:45	14:15	CON	VX-34	9:08:13	9:19:12	I	
1/6/2014			13:45	14:15	POST		9:19:13	9:49:12	NONE	
1/7/2014			9:01	15:18	PRE		9:01:00	9:31:00	NONE	
1/7/2014			9:01	15:18	CON	VX-26	11:29:27	11:59:00	V	
1/7/2014			9:01	15:18	CON	VX-26	14:26:15	14:26:16	SSI	
1/7/2014			9:01	15:18	CON	VX-26	14:26:57	14:26:58	SSI	
1/7/2014			9:01	15:18	CON	VX-26	14:27:55	14:27:56	SSI	
1/7/2014			9:01	15:18	CON	VX-26	14:28:56	14:48:00	I	
1/7/2014			9:01	15:18	POST		14:48:00	15:18:00	NONE	
1/8/2014	47.75219	122.72528	8:05	14:17	PRE		8:05:28	8:20:33	NONE	
1/8/2014	47.75219	122.72528	8:05	14:17	CON	N-1	8:33:20	9:49:34	V	
1/8/2014	47.75219	122.72528	8:05	14:17	CON	N-1	9:49:58	10:16:18	V	

Date	Latitude	Longitude	Time Effort Initiated	Time Effort Completed	Event Code	Pile	Start Time	End Time	Const Type	Comments
1/8/2014	47.75219	122.72528	8:05	14:17	CON	N-1	10:20:03	10:42:50	V	
1/8/2014	47.75119	122.7248	8:05	14:17	CON	VX-28	12:33:18	13:00:07	V	
1/8/2014	47.75219	122.72528	8:05	14:17	CON	N-1	13:32:11	13:32:12	SSI	
1/8/2014	47.75219	122.72528	8:05	14:17	CON	N-1	13:33:19	13:33:20	SSI	
1/8/2014	47.75219	122.72528	8:05	14:17	CON	N-1	13:34:24	13:34:25	SSI	
1/8/2014	47.75219	122.72528	8:05	14:17	CON	N-1	13:35:30	13:47:28	I	
1/8/2014	47.75219	122.72528	8:05	14:17	POST		13:47:00	14:17:00	NONE	
1/9/2014	47.75119	122.7248	8:05	17:08	PRE		8:05:00	8:35:00	NONE	
1/9/2014	47.75119	122.7248	8:05	17:08	CON	VX-28	8:59:32	8:59:33	SSI	
1/9/2014	47.75119	122.7248	8:05	17:08	CON	VX-28	9:00:18	9:00:19	SSI	
1/9/2014	47.75119	122.7248	8:05	17:08	CON	VX-28	9:00:59	9:01:00	SSI	
1/9/2014	47.75119	122.7248	8:05	17:08	CON	VX-28	9:01:41	9:08:52	I	
1/9/2014	47.75076	122.72546	8:05	17:08	CON	J-10	9:36:43	9:36:45	I	no ss due to pile impacted 30m away
1/9/2014	47.75076	122.72546	8:05	17:08	CON	J-10	9:37:36	9:45:20	I	
1/9/2014	47.75076	122.72546	8:05	17:08	CON	M-9	10:14:42	10:19:01	I	
1/9/2014	47.75076	122.72546	8:05	17:08	CON	R-9	10:41:30	10:52:11	I	
1/9/2014	47.75076	122.72546	8:05	17:08	CON	R-8	11:05:46	11:10:09	I	
1/9/2014			8:05	17:08	CON	N-4	11:23:41	11:24:43	V	
1/9/2014			8:05	17:08	CON	N-4	11:27:58	11:28:00	V	
1/9/2014			8:05	17:08	CON	N-4	11:31:36	12:01:22	V	
1/9/2014	47.75076	122.72546	8:05	17:08	CON	M-8	11:33:15	11:36:34	I	
1/9/2014	47.75076	122.72546	8:05	17:08	CON	M-8	11:38:46	11:40:38	I	
1/9/2014	47.75076	122.72546	8:05	17:08	CON	M-6	11:56:54	11:59:05	I	
1/9/2014	47.75119	122.7248	8:05	17:08	CON	VX-25	15:11:28	15:33:15	V	
1/9/2014			8:05	17:08	CON	N-2	16:18:07	16:38:17	V	
1/9/2014	47.75119	122.7248	8:05	17:08	POST		16:38:00	17:08:00	NONE	
1/10/2014	47.75126	122.72466	8:05	15:34	PRE		8:05:00	8:20:00	NONE	
1/10/2014	47.75126	122.72466	8:05	15:34	CON	VX-25	8:45:30	8:45:31	SSI	1 blow
1/10/2014	47.75126	122.72466	8:05	15:34	CON	VX-25	8:46:17	8:46:18	SSI	1 blow
1/10/2014	47.75126	122.72466	8:05	15:34	CON	VX-25	8:46:52	8:46:53	SSI	1 blow
1/10/2014	47.75126	122.72466	8:05	15:34	CON	VX-25	8:47:32	8:48:38	I	
1/10/2014	47.75126	122.72466	8:05	15:34	CON	VX-25	8:50:01	9:02:29	I	
1/10/2014	47.75126	122.72466	8:05	15:34	CON	N-2	9:21:08	9:24:29	V	
1/10/2014	47.75126	122.72466	8:05	15:34	CON	N-2	9:26:03	10:29:45	V	
1/10/2014	47.75126	122.72466	8:05	15:34	CON	N-2	12:34:31	12:34:32	SSI	1 blow
1/10/2014	47.75126	122.72466	8:05	15:34	CON	N-2	12:35:35	12:35:36	SSI	1 blow
1/10/2014	47.75126	122.72466	8:05	15:34	CON	N-2	12:36:34	12:36:35	SSI	1 blow
1/10/2014	47.75126	122.72466	8:05	15:34	CON	N-2	12:37:45	12:37:53	SSI	3 blows
1/10/2014	47.75126	122.72466	8:05	15:34	CON	N-2	12:39:26	12:44:45	I	
1/10/2014	47.75126	122.72466	8:05	15:34	CON	VX-27	14:55:39	15:04:22	V	

Date	Latitude	Longitude	Time Effort Initiated	Time Effort Completed	Event Code	Pile	Start Time	End Time	Const Type	Comments
1/10/2014	47.75126	122.72466	8:05	15:34	POST		15:04:30	15:34:30	NONE	
1/12/2014	47.75118	122.72471	9:00	14:27	PRE		9:00:00	9:15:00	NONE	
1/12/2014	47.75118	122.72471	9:00	14:27	CON	VX-27	10:30:16	10:30:17	SSI	
1/12/2014	47.75118	122.72471	9:00	14:27	CON	VX-27	10:30:55	10:30:57	SSI	
1/12/2014	47.75118	122.72471	9:00	14:27	CON	VX-27	10:31:39	10:31:40	SSI	
1/12/2014	47.75118	122.72471	9:00	14:27	CON	VX-27	10:32:16	10:45:46	I	
1/12/2014	47.75226	122.7251	9:00	14:27	CON	N-3	12:02:33	12:12:58	V	had to adjust template
1/12/2014	47.75226	122.7251	9:00	14:27	CON	N-3	12:13:57	12:14:41	V	
1/12/2014	47.75226	122.7251	9:00	14:27	POST		13:57:00	14:27:00	NONE	
1/13/2014	47.75294	122.72437	11:45	16:01	CON	VX-23	13:50:12	14:02:38	V	
1/13/2014	47.75294	122.72437	11:45	16:01	CON	VX-23	15:19:35	15:30:37	I	
1/13/2014	47.75294	122.72437	11:45	16:01	POST		15:31:00	16:01:00	NONE	
1/14/2014	47.75143	122.72445	8:30	16:53	CON	VX-21	11:33:39	11:47:36	V	
1/14/2014			8:30	16:53	CON	VX-20	13:38:47	14:02:40	V	
1/14/2014	47.75143	122.72445	8:30	16:53	CON	V-2	13:43:10	13:43:14	SSI	
1/14/2014	47.75143	122.72445	8:30	16:53	CON	V-2	13:44:10	13:44:14	SSI	
1/14/2014	47.75143	122.72445	8:30	16:53	CON	V-2	13:44:43	13:44:46	SSI	
1/14/2014	47.75143	122.72445	8:30	16:53	CON	V-2	13:45:38	13:50:05	I	
1/14/2014			8:30	16:53	CON	VX-20	14:03:26	14:04:15	V	
1/14/2014	47.75143	122.72445	8:30	16:53	CON	M-1	14:06:03	14:08:43	I	
1/14/2014			8:30	16:53	CON	VX-21	14:20:30	14:20:31	SSI	
1/14/2014			8:30	16:53	CON	VX-21	14:21:05	14:21:06	SSI	
1/14/2014			8:30	16:53	CON	VX-21	14:21:30	14:21:31	SSI	
1/14/2014			8:30	16:53	CON	VX-21	14:22:00	14:35:00	I	
1/14/2014			8:30	16:53	CON	VX-21	14:22:11	14:22:12	SSI	
1/14/2014			8:30	16:53	CON	VX-21	14:22:56	14:22:57	SSI	
1/14/2014			8:30	16:53	CON	VX-21	14:23:38	14:23:39	SSI	
1/14/2014			8:30	16:53	CON	VX-21	14:24:22	14:37:43	I	
1/14/2014	47.75143	122.72445	8:30	16:53	CON	R-1	14:41:37	14:43:49	I	
1/14/2014	47.75143	122.72445	8:30	16:53	CON	R-3	14:56:23	14:59:45	I	
1/14/2014	47.75143	122.72445	8:30	16:53	CON	T-2	15:09:21	15:10:52	I	
1/14/2014	47.75143	122.72445	8:30	16:53	CON	T-1	15:29:49	15:32:54	I	
1/14/2014	47.75143	122.72445	8:30	16:53	CON	V-1	15:47:34	15:49:28	I	
1/14/2014	47.75143	122.72445	8:30	16:53	CON	V-3	16:18:38	16:21:15	I	
1/14/2014	47.75143	122.72445	8:30	16:53	POST		16:22:52	4:52:52	NONE	post-Construction survey
1/15/2014	47.75095	122.72474	7:45	16:57	PRE		7:45:00	8:15:00	NONE	
1/15/2014	47.75095	122.72474	7:45	16:57	CON	VX-20	8:29:21	8:29:23	SSI	
1/15/2014	47.75095	122.72474	7:45	16:57	CON	VX-20	8:30:34	8:30:35	SSI	
1/15/2014	47.75095	122.72474	7:45	16:57	CON	VX-20	8:31:41	8:31:42	SSI	
1/15/2014	47.75095	122.72474	7:45	16:57	CON	VX-20	8:33:03	8:49:57	I	

Date	Latitude	Longitude	Time Effort Initiated	Time Effort Completed	Event Code	Pile	Start Time	End Time	Const Type	Comments
1/15/2014	47.75095	122.72474	7:45	16:57	CON	VX-20	8:53:46	8:55:59	I	
1/15/2014	47.75079	122.72566	7:45	16:57	CON	A-7	10:56:47	10:56:48	SSI	
1/15/2014	47.75079	122.72566	7:45	16:57	CON	A-7	10:57:37	10:57:38	SSI	
1/15/2014	47.75079	122.72566	7:45	16:57	CON	A-7	10:58:25	10:58:26	SSI	
1/15/2014	47.75079	122.72566	7:45	16:57	CON	A-7	10:59:14	11:20:40	I	
1/15/2014	47.75079	122.72566	7:45	16:57	CON	B-5	11:40:17	11:44:31	I	restrikes
1/15/2014	47.75079	122.72566	7:45	16:57	CON	B-5	11:47:39	11:54:03	I	
1/15/2014	47.75079	122.72566	7:45	16:57	CON	B-6	12:47:50	12:47:55	SSI	restrikes
1/15/2014	47.75079	122.72566	7:45	16:57	CON	B-6	12:48:37	12:48:38	SSI	
1/15/2014	47.75079	122.72566	7:45	16:57	CON	B-6	12:49:24	12:49:26	SSI	
1/15/2014	47.75079	122.72566	7:45	16:57	CON	B-6	12:50:13	12:52:22	I	
1/15/2014	47.75079	122.72566	7:45	16:57	CON	B-6	13:07:44	13:08:52	I	
1/15/2014	47.75079	122.72566	7:45	16:57	MS	B-6	13:09:24	13:10:08	NONE	
1/15/2014	47.75079	122.72566	7:45	16:57	CON	B-6	13:10:08	13:15:31	I	
1/15/2014	47.75079	122.72566	7:45	16:57	CON	B-7	13:30:10	13:33:36	I	restrikes
1/15/2014	47.75079	122.72566	7:45	16:57	CON	B-8	13:49:05	13:52:06	I	
1/15/2014	47.75079	122.72566	7:45	16:57	CON	B-8	13:53:15	14:00:51	I	
1/15/2014	47.75079	122.72566	7:45	16:57	CON	B-8	14:05:00	14:07:44	I	
1/15/2014			7:45	16:57	CON	VX-18	14:21:38	14:47:38	V	
1/15/2014	47.75079	122.72566	7:45	16:57	CON	A-8	14:28:00	14:40:00	I	Times reported are estimated
1/15/2014			7:45	16:57	CON	VX-18	14:51:05	14:58:25	V	
1/15/2014	47.75079	122.72566	7:45	16:57	CON	A-8	14:53:43	14:54:40	I	
1/15/2014	47.75079	122.72566	7:45	16:57	CON	A-9	15:13:02	15:26:49	I	
1/15/2014	47.75079	122.72566	7:45	16:57	CON	A-9	15:28:55	15:32:14	I	
1/15/2014	47.75079	122.72566	7:45	16:57	CON	B-9	15:51:34	16:04:17	I	
1/15/2014	47.75095	122.72474	7:45	16:57	CON	VX-18	16:16:24	16:27:16	I	
1/15/2014	47.75095	122.72474	7:45	16:57	POST		16:27:00	16:57:00	NONE	
1/16/2014	47.75079	122.72566	10:00	16:35	PRE		10:00:00	10:30:00	NONE	
1/16/2014	47.75079	122.72566	10:00	16:35	CON	A-10	11:00:42	11:00:43	SSI	
1/16/2014	47.75079	122.72566	10:00	16:35	CON	A-10	11:01:35	11:01:36	SSI	
1/16/2014	47.75079	122.72566	10:00	16:35	CON	A-10	11:02:21	11:02:22	SSI	
1/16/2014	47.75079	122.72566	10:00	16:35	CON	A-10	11:03:17	11:22:01	I	
1/16/2014	47.75079	122.72566	10:00	16:35	CON	B-10	11:36:26	11:45:32	I	
1/16/2014	47.75079	122.72566	10:00	16:35	CON	B-10	11:47:26	11:53:57	I	
1/16/2014	47.75079	122.72566	10:00	16:35	CON	B-10	11:57:33	12:03:39	I	
1/16/2014			10:00	16:05	CON	VX-17	12:52:17	13:06:20	V	
1/16/2014			10:00	16:05	CON	VX-17	13:14:31	13:23:37	V	
1/16/2014	47.75079	122.72566	10:00	16:35	CON	B-11	14:00:51	14:00:53	SSI	
1/16/2014	47.75079	122.72566	10:00	16:35	CON	B-11	14:01:40	14:01:42	SSI	
1/16/2014	47.75079	122.72566	10:00	16:35	CON	B-11	14:02:27	14:02:31	SSI	

Date	Latitude	Longitude	Time Effort Initiated	Time Effort Completed	Event Code	Pile	Start Time	End Time	Const Type	Comments
1/16/2014	47.75079	122.72566	10:00	16:35	CON	B-11	14:03:17	14:19:19	I	
1/16/2014	47.75079	122.72566	10:00	16:35	CON	B-11	14:21:40	14:24:56	I	
1/16/2014	47.75079	122.72566	10:00	16:35	CON	A-11	14:36:12	14:45:43	I	
1/16/2014	47.75079	122.72566	10:00	16:35	CON	A-11	14:48:49	14:52:07	I	
1/16/2014	47.75079	122.72566	10:00	16:35	CON	A-11	14:54:33	14:57:50	I	
1/16/2014	47.75079	122.72566	10:00	16:35	CON	A-12	15:09:44	15:17:36	I	
1/16/2014			10:00	16:05	CON	VX-17	15:17:43	15:19:29	I	
1/16/2014			10:00	16:05	CON	VX-17	15:21:10	15:40:33	I	
1/16/2014	47.75079	122.72566	10:00	16:35	CON	B-12	15:42:23	15:46:46	I	
1/16/2014	47.75079	122.72566	10:00	16:35	CON	B-13	15:56:47	16:04:59	I	
1/16/2014	47.75079	122.72566	10:00	16:35	POST		16:05:00	16:35:00	NONE	
1/17/2014	47.75118	122.72545	9:20	17:06	PRE		9:20:00	9:50:00	NONE	
1/17/2014	47.75118	122.72545	9:20	17:06	CON	A-13	10:22:49	10:22:50	SSI	
1/17/2014	47.75118	122.72545	9:20	17:06	CON	A-13	10:23:38	10:23:39	SSI	
1/17/2014	47.75118	122.72545	9:20	17:06	CON	A-13	10:24:30	10:24:31	SSI	
1/17/2014	47.75118	122.72545	9:20	17:06	CON	A-13	10:25:17	10:37:11	I	
1/17/2014	47.75095	122.72474	9:20	17:06	CON	VX-19	10:50:36	10:50:46	V	
1/17/2014	47.75118	122.72545	9:20	17:06	CON	A-14	10:55:27	11:04:35	I	
1/17/2014	47.75095	122.72474	9:20	17:06	CON	VX-19	11:03:41	11:04:07	V	
1/17/2014	47.75118	122.72545	9:20	17:06	CON	B-14	11:16:17	11:23:39	I	
1/17/2014	47.75118	122.72545	9:20	17:06	CON	B-15	11:34:51	11:40:28	I	
1/17/2014	47.75095	122.72474	9:20	17:06	CON	VX-19	11:50:06	12:02:00	V	
1/17/2014	47.75118	122.72545	9:20	17:06	CON	A-15	11:50:49	11:59:51	I	
1/17/2014	47.75118	122.72545	9:20	17:06	CON	A-16	12:51:40	12:51:41	SSI	
1/17/2014	47.75118	122.72545	9:20	17:06	CON	A-16	12:52:28	12:52:29	SSI	
1/17/2014	47.75118	122.72545	9:20	17:06	CON	A-16	12:53:16	12:53:17	SSI	
1/17/2014	47.75118	122.72545	9:20	17:06	CON	A-16	12:54:06	13:01:50	I	
1/17/2014	47.75118	122.72545	9:20	17:06	CON	B-16	13:19:00	13:24:34	I	
1/17/2014	47.75095	122.72474	9:20	17:06	CON	VX-19	13:56:07	13:56:09	SSI	
1/17/2014	47.75095	122.72474	9:20	17:06	CON	VX-19	13:57:18	13:57:19	SSI	
1/17/2014	47.75095	122.72474	9:20	17:06	CON	VX-19	13:58:30	13:58:31	SSI	
1/17/2014	47.75095	122.72474	9:20	17:06	CON	VX-19	13:59:44	14:13:10	I	
1/17/2014	47.75118	122.72545	9:20	17:06	CON	B-17	15:28:29	15:28:30	SSI	
1/17/2014	47.75118	122.72545	9:20	17:06	CON	B-17	15:29:16	15:29:18	SSI	
1/17/2014	47.75118	122.72545	9:20	17:06	CON	B-17	15:30:04	15:30:07	SSI	
1/17/2014	47.75118	122.72545	9:20	17:06	CON	B-17	15:30:55	15:41:12	I	
1/17/2014	47.75118	122.72545	9:20	17:06	MD	A-17	15:42:15	15:58:03	NONE	
1/17/2014	47.75118	122.72545	9:20	17:06	CON	A-17	15:58:03	16:07:16	I	
1/17/2014	47.75126	122.72467	9:20	17:06	CON	VX-24	16:25:55	16:36:14	V	
1/17/2014	47.75118	122.72545	9:20	17:06	POST		16:36:00	17:06:00	NONE	

Date	Latitude	Longitude	Time Effort Initiated	Time Effort Completed	Event Code	Pile	Start Time	End Time	Const Type	Comments
1/18/2014	47.75118	122.72545	8:10	16:49	PRE		8:10:00	8:40:00	NONE	
1/18/2014			8:10	16:49	CON	VX-24	9:08:42	9:08:43	SSI	SS1
1/18/2014			8:10	16:49	CON	VX-24	9:09:28	9:09:29	SSI	SS2
1/18/2014			8:10	16:49	CON	VX-24	9:10:13	9:10:14	SSI	SS3
1/18/2014			8:10	16:49	CON	VX-24	9:10:58	9:30:40	I	
1/18/2014	47.75118	122.72545	8:10	16:49	CON	A-18	10:04:26	10:04:28	SSI	
1/18/2014	47.75118	122.72545	8:10	16:49	CON	A-18	10:05:22	10:05:23	SSI	
1/18/2014	47.75118	122.72545	8:10	16:49	CON	A-18	10:06:11	10:06:12	SSI	
1/18/2014	47.75118	122.72545	8:10	16:49	CON	A-18	10:06:59	10:11:45	I	
1/18/2014	47.75118	122.72545	8:10	16:49	CON	A-18	10:13:34	10:19:26	I	
1/18/2014	47.75118	122.72545	8:10	16:49	CON	B-18	10:30:33	10:35:30	I	
1/18/2014	47.75118	122.72545	8:10	16:49	CON	B-19	10:47:04	10:54:58	I	
1/18/2014	47.75118	122.72545	8:10	16:49	CON	A-19	11:04:09	11:10:19	I	
1/18/2014	47.75118	122.72545	8:10	16:49	CON	A-20	11:21:07	11:30:19	I	
1/18/2014	47.75118	122.72545	8:10	16:49	CON	B-20	11:45:31	11:51:38	I	
1/18/2014	47.75118	122.72545	8:10	16:49	CON	B-20	11:52:44	11:53:53	I	
1/18/2014			8:10	16:49	CON	VX-22	14:48:41	14:56:55	V	
1/18/2014			8:10	16:49	CON	VX-22	16:00:14	16:00:15	SSI	SS1
1/18/2014			8:10	16:49	CON	VX-22	16:00:57	16:00:58	SSI	SS2
1/18/2014			8:10	16:49	CON	VX-22	16:01:41	16:01:42	SSI	SS3
1/18/2014			8:10	16:49	CON	VX-22	16:02:25	16:02:29	I	Trouble getting hammer going
1/18/2014			8:10	16:49	CON	VX-22	16:03:15	16:03:17	I	
1/18/2014			8:10	16:49	CON	VX-22	16:04:04	16:04:05	I	
1/18/2014			8:10	16:49	CON	VX-22	16:04:58	16:04:59	I	
1/18/2014			8:10	16:49	CON	VX-22	16:05:46	16:05:47	I	
1/18/2014			8:10	16:49	CON	VX-22	16:06:32	16:06:33	I	
1/18/2014			8:10	16:49	CON	VX-22	16:07:32	16:07:35	I	
1/18/2014			8:10	16:49	CON	VX-22	16:08:38	16:08:42	I	
1/18/2014			8:10	16:49	CON	VX-22	16:10:21	16:19:50	I	blow count is an estimate
1/18/2014			8:10	16:49	POST		16:19:30	16:49:39	NONE	
1/20/2014	47.75055	122.72483	8:15	14:34	PRE		8:15:00	8:30:00	NONE	
1/20/2014	47.75055	122.72483	8:15	14:34	CON	VX-16	10:40:46	11:04:27	V	
1/20/2014	47.75055	122.72483	8:15	14:34	CON	VX-16	13:47:21	13:47:23	SSI	1 blow
1/20/2014	47.75055	122.72483	8:15	14:34	CON	VX-16	13:48:27	13:48:28	SSI	1 blow
1/20/2014	47.75055	122.72483	8:15	14:34	CON	VX-16	13:49:33	13:49:34	SSI	1 blow
1/20/2014	47.75055	122.72483	8:15	14:34	CON	VX-16	13:50:40	13:58:40	I	299 blows
1/20/2014	47.75055	122.72483	8:15	14:34	CON	VX-16	14:00:39	14:03:20	I	99 blows
1/20/2014	47.75055	122.72483	8:15	14:34	POST		14:04:00	14:34:00	NONE	
1/21/2014	47.75052	122.72484	8:10	16:12	PRE		8:10:00	8:25:00	NONE	
1/21/2014	47.75052	122.72484	8:10	16:12	CON	VX-14	10:03:01	10:03:41	V	

Date	Latitude	Longitude	Time Effort Initiated	Time Effort Completed	Event Code	Pile	Start Time	End Time	Const Type	Comments
1/21/2014	47.75052	122.72484	8:10	16:12	CON	VX-14	10:05:05	10:08:46	V	
1/21/2014	47.75052	122.72484	8:10	16:12	CON	VX-14	10:09:39	10:13:51	V	
1/21/2014	47.75052	122.72484	8:10	16:12	CON	VX-14	10:16:23	10:21:28	V	
1/21/2014	47.75052	122.72484	8:10	16:12	CON	VX-14	10:22:21	10:31:42	V	
1/21/2014	47.75052	122.72484	8:10	16:12	CON	VX-14	11:27:16	11:27:17	SSI	
1/21/2014	47.75052	122.72484	8:10	16:12	CON	VX-14	11:28:25	11:28:27	SSI	
1/21/2014	47.75052	122.72484	8:10	16:12	CON	VX-14	11:29:37	11:29:38	SSI	
1/21/2014	47.75052	122.72484	8:10	16:12	CON	VX-14	11:31:06	11:37:01	I	
1/21/2014	47.75052	122.72484	8:10	16:12	POST		15:42:00	16:12:00	NONE	stabbed VX-13 from 14:09-14:12
1/22/2014	47.75052	122.72484	8:00	16:58	PRE		8:00:00	8:15:00	NONE	
1/22/2014	47.75186	122.72543	8:00	16:58	PRE		8:00:00	8:30:00	NONE	
1/22/2014	47.75052	122.72484	8:00	16:58	CON	VX-13	8:53:53	8:56:19	V	
1/22/2014	47.75052	122.72484	8:00	16:58	CON	VX-13	8:57:23	9:05:39	V	
1/22/2014	47.75052	122.72484	8:00	16:58	CON	VX-13	11:04:08	11:04:09	SSI	
1/22/2014	47.75052	122.72484	8:00	16:58	CON	VX-13	11:05:12	11:05:13	SSI	
1/22/2014	47.75052	122.72484	8:00	16:58	CON	VX-13	11:06:19	11:06:20	SSI	
1/22/2014	47.75052	122.72484	8:00	16:58	CON	VX-13	11:07:25	11:24:17	I	
1/22/2014	47.75186	122.72543	8:00	16:58	CON	B-21	12:02:33	12:02:34	SSI	48"
1/22/2014	47.75186	122.72543	8:00	16:58	CON	B-21	12:03:23	12:03:24	SSI	48"
1/22/2014	47.75186	122.72543	8:00	16:58	CON	B-21	12:04:13	12:04:14	SSI	48"
1/22/2014	47.75186	122.72543	8:00	16:58	CON	B-21	12:05:02	12:13:06	I	48"
1/22/2014	47.75186	122.72543	8:00	16:58	CON	A-21	12:25:09	12:34:00	I	48"
1/22/2014	47.75186	122.72543	8:00	16:58	CON	A-22	12:47:06	12:55:11	I	48"
1/22/2014	47.75186	122.72543	8:00	16:58	CON	B-22	13:08:54	13:20:40	I	48"
1/22/2014	47.75186	122.72543	8:00	16:58	CON	B-23	13:34:06	13:38:22	I	48"; lost count
1/22/2014	47.75186	122.72543	8:00	16:58	MS	B-23	13:38:22	13:53:22	NONE	did not see seal again
1/22/2014	47.75186	122.72543	8:00	16:58	CON	B-23	13:53:27	13:55:05	I	48"
1/22/2014	47.75186	122.72543	8:00	16:58	CON	B-23	13:57:30	13:59:35	I	48"
1/22/2014	47.75186	122.72543	8:00	16:58	CON	A-23	14:10:06	14:21:28	I	48"
1/22/2014	47.75186	122.72543	8:00	16:58	CON	A-24	14:40:23	14:53:28	I	
1/22/2014	47.75052	122.72484	8:00	16:58	CON	VX-15	16:20:25	16:28:05	V	
1/22/2014	47.75052	122.72484	8:00	16:58	POST		16:28:05	16:58:05	NONE	
1/23/2014	47.75061	122.72471	7:58	16:18	PRE		7:58:00	8:28:00	NONE	
1/23/2014	47.75061	122.72471	7:58	16:18	CON	VX-15	8:28:25	8:28:26	SSI	
1/23/2014	47.75061	122.72471	7:58	16:18	CON	VX-15	8:29:41	8:29:42	SSI	
1/23/2014	47.75061	122.72471	7:58	16:18	CON	VX-15	8:31:03	8:31:04	SSI	
1/23/2014	47.75061	122.72471	7:58	16:18	CON	VX-15	8:32:28	8:47:26	I	
1/23/2014	47.75121	122.72524	7:58	16:18	CON	R-17	11:21:55	11:21:56	SSI	
1/23/2014	47.75121	122.72524	7:58	16:18	CON	R-17	11:22:49	11:22:50	SSI	
1/23/2014	47.75121	122.72524	7:58	16:18	CON	R-17	11:23:40	11:23:45	SSI	

Date	Latitude	Longitude	Time Effort Initiated	Time Effort Completed	Event Code	Pile	Start Time	End Time	Const Type	Comments
1/23/2014	47.75121	122.72524	7:58	16:18	CON	R-17	11:24:43	11:37:01	I	
1/23/2014	47.75121	122.72524	7:58	16:18	CON	R-16	11:48:26	11:57:21	I	
1/23/2014	47.75121	122.72524	7:58	16:18	MS	R-16	11:57:21	12:08:48	NONE	Spotted seal outside zone, let them resume
1/23/2014	47.75121	122.72524	7:58	16:18	CON	R-16	12:09:47	12:13:06	I	
1/23/2014	47.75121	122.72524	7:58	16:18	CON	M-17	12:26:46	12:40:55	I	
1/23/2014	47.75121	122.72524	7:58	16:18	CON	M-16	12:54:37	13:08:12	I	
1/23/2014	47.75121	122.72524	7:58	16:18	CON	J-17	13:20:58	13:28:25	I	
1/23/2014	47.75121	122.72524	7:58	16:18	CON	J-16	14:04:07	14:04:09	SSI	
1/23/2014	47.75121	122.72524	7:58	16:18	CON	J-16	14:04:56	14:04:58	SSI	
1/23/2014	47.75121	122.72524	7:58	16:18	CON	J-16	14:05:47	14:05:50	SSI	
1/23/2014	47.75121	122.72524	7:58	16:18	CON	J-16	14:06:43	14:06:50	I	
1/23/2014	47.75121	122.72524	7:58	16:18	CON	J-16	14:07:39	14:20:17	I	
1/23/2014	47.75121	122.72524	7:58	16:18	CON	J-15	14:37:18	14:50:31	I	
1/23/2014	47.75121	122.72524	7:58	16:18	CON	M-15	15:09:21	15:27:14	I	
1/23/2014	47.75121	122.72524	7:58	16:18	CON	R-15	15:41:45	15:48:19	I	
1/23/2014	47.75121	122.72524	7:58	16:18	POST		15:48:00	16:18:00	NONE	
1/24/2014	47.75101	122.72458	8:45	16:34	PRE		8:45:00	9:00:00	NONE	
1/24/2014	47.75101	122.72459	8:45	16:34	CON	R-17	9:52:32	9:52:33	SSI	SS1
1/24/2014	47.75101	122.72459	8:45	16:34	CON	R-17	9:53:27	9:53:28	SSI	SS2
1/24/2014	47.75101	122.72459	8:45	16:34	CON	R-17	9:54:20	9:54:21	SSI	SS3
1/24/2014	47.75101	122.72459	8:45	16:34	CON	R-17	9:55:13	9:56:42	I	warming up hammer
1/24/2014	47.75101	122.72459	8:45	16:34	CON	R-18	10:08:06	10:12:46	I	
1/24/2014	47.75101	122.72458	8:45	16:34	CON	VX-30	10:22:58	10:22:59	V	trying to get hammer seated
1/24/2014	47.75101	122.72459	8:45	16:34	CON	M-19	10:24:57	10:29:08	I	
1/24/2014	47.75101	122.72458	8:45	16:34	CON	VX-30	10:25:42	10:25:44	V	same
1/24/2014	47.75101	122.72458	8:45	16:34	CON	VX-30	10:27:37	10:27:38	V	same
1/24/2014	47.75101	122.72458	8:45	16:34	CON	VX-30	10:31:34	10:31:46	V	
1/24/2014	47.75101	122.72458	8:45	16:34	CON	VX-30	10:32:49	10:33:43	V	
1/24/2014	47.75101	122.72458	8:45	16:34	CON	VX-30	10:42:12	10:47:24	V	
1/24/2014	47.75101	122.72458	8:45	16:34	CON	VX-30	10:48:00	11:06:56	V	
1/24/2014	47.75101	122.72458	8:45	16:34	CON	VX-30	12:55:11	12:55:12	SSI	
1/24/2014	47.75101	122.72458	8:45	16:34	CON	VX-30	12:56:34	12:56:35	SSI	
1/24/2014	47.75101	122.72458	8:45	16:34	CON	VX-30	12:58:03	12:58:04	SSI	
1/24/2014	47.75101	122.72458	8:45	16:34	CON	VX-30	12:59:14	13:06:44	I	
1/24/2014	47.75101	122.72458	8:45	16:34	CON	VX-30	13:08:55	13:09:15	I	
1/24/2014	47.75101	122.72458	8:45	16:34	CON	VX-30	13:10:52	13:17:50	I	
1/24/2014	47.75101	122.72459	8:45	16:34	CON	J-14	14:19:53	14:19:54	SSI	
1/24/2014	47.75101	122.72459	8:45	16:34	CON	J-14	14:20:43	14:20:44	SSI	
1/24/2014	47.75101	122.72459	8:45	16:34	CON	J-14	14:21:36	14:21:37	SSI	

Date	Latitude	Longitude	Time Effort Initiated	Time Effort Completed	Event Code	Pile	Start Time	End Time	Const Type	Comments
1/24/2014	47.75101	122.72459	8:45	16:34	CON	J-14	14:22:25	14:29:21	I	
1/24/2014	47.75101	122.72459	8:45	16:34	CON	M-14	14:40:56	14:47:51	I	
1/24/2014	47.75101	122.72459	8:45	16:34	CON	M-14	14:50:17	14:59:02	I	
1/24/2014	47.75101	122.72459	8:45	16:34	CON	J-12	15:15:38	15:27:33	I	
1/24/2014	47.75101	122.72459	8:45	16:34	CON	J-11	15:49:02	16:04:18	I	
1/24/2014	47.75101	122.72459	8:45	16:34	POST		16:04:18	16:34:18	NONE	
1/25/2014	47.75101	122.72458	8:15	17:00	PRE		8:15:00	8:45:00	NONE	
1/25/2014	47.75101	122.72458	8:15	17:00	CON	VX-29	9:00:42	9:07:57	V	
1/25/2014			8:15	17:00	CON	J-31	10:45:07	10:45:10	SSI	
1/25/2014			8:15	17:00	CON	J-31	10:46:01	10:46:02	SSI	
1/25/2014			8:15	17:00	CON	J-31	10:46:53	10:46:55	SSI	
1/25/2014			8:15	17:00	CON	J-31	10:47:44	10:49:34	I	Restrikes
1/25/2014	47.75101	122.72458	8:15	17:00	CON	VX-29	10:56:35	10:56:36	SSI	SS1
1/25/2014	47.75101	122.72458	8:15	17:00	CON	VX-29	10:57:50	10:57:51	SSI	SS2
1/25/2014	47.75101	122.72458	8:15	17:00	CON	VX-29	10:59:03	10:59:04	SSI	SS3
1/25/2014	47.75101	122.72458	8:15	17:00	CON	VX-29	11:00:18	11:00:20	I	
1/25/2014	47.75101	122.72458	8:15	17:00	CON	VX-29	11:01:25	11:03:09	I	
1/25/2014	47.75101	122.72458	8:15	17:00	CON	VX-29	11:05:37	11:15:26	I	
1/25/2014			8:15	17:00	CON	N-30	11:17:57	11:19:30	I	Restrikes
1/25/2014			8:15	17:00	CON	L-30	11:35:59	11:37:02	I	Restrikes
1/25/2014			8:15	17:00	CON	L-30	11:45:09	11:45:51	I	
1/25/2014			8:15	17:00	CON	J-30	12:03:57	12:04:54	I	Restrikes
1/25/2014			8:15	17:00	CON	AB-4	13:11:50	13:50:15	V	
1/25/2014			8:15	17:00	CON	L-29	13:15:01	13:15:03	SSI	
1/25/2014			8:15	17:00	CON	L-29	13:15:57	13:15:58	SSI	
1/25/2014			8:15	17:00	CON	L-29	13:16:47	13:16:49	SSI	
1/25/2014			8:15	17:00	CON	L-29	13:17:37	13:18:14	I	Restrikes
1/25/2014			8:15	17:00	CON	N-29	13:34:16	13:35:10	I	Restrikes
1/25/2014			8:15	17:00	CON	L-29	13:50:50	13:51:25	I	Restrikes
1/25/2014			8:15	17:00	CON	AB-4	13:59:51	14:14:24	V	
1/25/2014			8:15	17:00	CON	J-28	14:05:27	14:05:44	I	Restrikes
1/25/2014			8:15	17:00	CON	J-28	14:07:57	14:08:38	I	Restrikes
1/25/2014			8:15	17:00	CON	N-28	14:29:26	14:30:03	I	Restrikes
1/25/2014			8:15	17:00	CON	J-32	14:55:36	14:56:53	I	Restrikes
1/25/2014	47.75101	122.72458	8:15	17:00	CON	VX-31	16:26:27	16:27:16	V	
1/25/2014	47.75101	122.72458	8:15	17:00	CON	VX-31	16:28:00	16:30:37	V	
1/25/2014	47.75101	122.72458	8:15	17:00	POST		16:30:38	17:00:37	NONE	
1/26/2014	47.75008	122.726	8:10	13:30	PRE		8:10:00	8:25:00	NONE	
1/26/2014	47.75008	122.726	8:10	13:30	CON	AB-4	8:57:29	8:57:30	SSI	

Date	Latitude	Longitude	Time Effort Initiated	Time Effort Completed	Event Code	Pile	Start Time	End Time	Const Type	Comments
1/26/2014	47.75008	122.726	8:10	13:30	CON	AB-4	8:58:41	8:59:11	SSI	fuel shutoff problem couldn't stop hammer
1/26/2014	47.75008	122.726	8:10	13:30	CON	AB-4	9:16:17	9:16:18	SSI	
1/26/2014	47.75008	122.726	8:10	13:30	CON	AB-4	9:17:01	9:17:08	I	dead blow
1/26/2014	47.75008	122.726	8:10	13:30	CON	AB-4	9:17:44	9:46:01	I	
1/26/2014	47.75008	122.726	8:10	13:30	POST		13:00:00	13:30:00	NONE	arbitrary time set by last half hour of observations
1/27/2014	47.74992	122.72607	8:10	16:08	CON	AB-1	9:18:25	9:37:07	V	
1/27/2014	47.74992	122.72607	8:10	16:08	CON	VX-31	10:27:11	10:27:13	SSI	
1/27/2014	47.74992	122.72607	8:10	16:08	CON	VX-31	10:28:20	10:28:21	SSI	
1/27/2014	47.74992	122.72607	8:10	16:08	CON	VX-31	10:29:31	10:29:32	SSI	
1/27/2014	47.74992	122.72607	8:10	16:08	CON	VX-31	10:30:41	10:47:54	I	
1/27/2014	47.74992	122.72607	8:10	16:08	CON	AB-1	14:21:23	14:21:25	SSI	
1/27/2014	47.74992	122.72607	8:10	16:08	CON	AB-1	14:22:08	14:22:09	SSI	
1/27/2014	47.74992	122.72607	8:10	16:08	CON	AB-1	14:22:53	14:22:54	SSI	
1/27/2014	47.74992	122.72607	8:10	16:08	CON	AB-1	14:23:40	14:39:40	I	stopped impacting -- problem
1/27/2014	47.74992	122.72607	8:10	16:08	CON	AB-1	14:47:32	15:02:26	I	restarted after repair
1/27/2014			8:10	16:08	CON	VX-32	15:29:58	15:33:30	V	
1/27/2014			8:10	16:08	CON	VX-32	15:37:06	15:37:33	V	
1/27/2014			8:10	16:08	CON	VX-32	15:38:08	15:38:25	V	
1/28/2014	47.75011	122.72612	8:18	16:55	PRE		8:18:00	8:48:00	NONE	
1/28/2014	47.75011	122.72612	8:18	16:55	CON	AB-2	13:40:46	13:56:05	V	
1/28/2014	47.75011	122.72612	8:18	16:55	CON	AB-2	15:19:13	15:19:14	SSI	
1/28/2014	47.75011	122.72612	8:18	16:55	CON	AB-2	15:19:59	15:20:00	SSI	
1/28/2014	47.75011	122.72612	8:18	16:55	CON	AB-2	15:20:44	15:20:45	SSI	
1/28/2014	47.75011	122.72612	8:18	16:55	CON	AB-2	15:22:13	15:22:15	I	
1/28/2014	47.75011	122.72612	8:18	16:55	CON	AB-2	15:22:57	15:22:58	I	
1/28/2014	47.75011	122.72612	8:18	16:55	CON	AB-2	15:23:42	15:23:44	I	
1/28/2014	47.75011	122.72612	8:18	16:55	CON	AB-2	15:24:29	15:24:31	I	
1/28/2014	47.75011	122.72612	8:18	16:55	CON	AB-2	15:25:16	15:25:17	I	
1/28/2014	47.75011	122.72612	8:18	16:55	CON	AB-2	15:26:01	15:26:02	I	
1/28/2014	47.75011	122.72612	8:18	16:55	CON	AB-2	15:26:45	15:33:39	I	
1/28/2014	47.75011	122.72612	8:18	16:55	CON	AB-2	16:18:01	16:18:02	SSI	
1/28/2014	47.75011	122.72612	8:18	16:55	CON	AB-2	16:18:44	16:18:45	SSI	
1/28/2014	47.75011	122.72612	8:18	16:55	CON	AB-2	16:19:27	16:19:28	SSI	
1/28/2014	47.75011	122.72612	8:18	16:55	CON	AB-2	16:20:11	16:25:19	I	
1/28/2014	47.75011	122.72612	8:18	16:55	POST		16:25:00	16:55:00	NONE	
1/29/2014			9:07	16:37	PRE		9:07:00	21:37:00	NONE	
1/29/2014			9:07	16:37	CON	C-2	9:37:01	9:37:03	SSI	
1/29/2014			9:07	16:37	CON	C-2	9:37:46	9:37:47	SSI	

Date	Latitude	Longitude	Time Effort Initiated	Time Effort Completed	Event Code	Pile	Start Time	End Time	Const Type	Comments
1/29/2014			9:07	16:37	CON	C-2	9:38:30	9:38:31	SSI	
1/29/2014			9:07	16:37	CON	C-2	9:39:16	9:39:18	I	
1/29/2014			9:07	16:37	CON	C-2	9:40:01	9:40:49	I	
1/29/2014			9:07	16:37	CON	AB-2	10:00:41	10:03:08	I	
1/29/2014			9:07	16:37	CON	VX-32	15:46:03	15:46:09	SSI	Did not have a crew member on kill switch
1/29/2014			9:07	16:37	CON	VX-32	15:47:44	15:47:45	SSI	
1/29/2014			9:07	16:37	CON	VX-32	15:49:08	15:49:09	SSI	
1/29/2014			9:07	16:37	CON	VX-32	15:50:30	16:07:03	I	
1/29/2014			9:07	16:37	POST		16:07:00	16:37:00	NONE	
1/30/2014	47.75043	122.72606	8:15	17:32	PRE		8:15:00	8:30:00	NONE	
1/30/2014	47.75043	122.72606	8:15	17:32	CON	AB-3	9:25:34	9:32:30	V	
1/30/2014	47.75043	122.72606	8:15	17:32	CON	AB-3	11:26:58	11:26:59	SSI	
1/30/2014	47.75043	122.72606	8:15	17:32	CON	AB-3	11:27:40	11:27:41	SSI	
1/30/2014	47.75043	122.72606	8:15	17:32	CON	AB-3	11:28:24	11:28:33	SSI	
1/30/2014	47.75043	122.72606	8:15	17:32	CON	AB-3	11:29:27	11:47:49	I	
1/30/2014	47.75056	122.7248	13:10	17:32	PRE		13:10:00	13:25:00	NONE	
1/30/2014	47.75056	122.7248	13:10	17:32	CON	VX-12	16:03:21	16:08:08	V	
1/30/2014	47.75056	122.7248	13:10	17:32	CON	VX-12	16:45:51	17:02:01	V	
1/30/2014	47.75056	122.7248	13:10	17:32	POST		17:02:00	17:32:00	NONE	
1/31/2014	47.75056	122.7248	8:00	17:02	PRE		8:00:00	8:30:00	NONE	
1/31/2014	47.75056	122.7248	8:00	17:02	CON	VX-12	9:54:30	9:54:31	SSI	
1/31/2014	47.75056	122.7248	8:00	17:02	CON	VX-12	9:55:34	9:55:35	SSI	
1/31/2014	47.75056	122.7248	8:00	17:02	CON	VX-12	9:56:35	9:56:36	SSI	
1/31/2014	47.75056	122.7248	8:00	17:02	CON	VX-12	9:57:38	10:15:18	I	
1/31/2014	47.75239	122.72501	8:00	17:02	CON	J-34	12:52:15	12:52:16	SSI	
1/31/2014	47.75239	122.72501	8:00	17:02	CON	J-34	12:53:17	12:53:19	SSI	
1/31/2014	47.75239	122.72501	8:00	17:02	CON	J-34	12:54:17	12:54:19	SSI	
1/31/2014	47.75239	122.72501	8:00	17:02	CON	J-34	12:55:15	12:56:31	I	
1/31/2014	47.75239	122.72501	8:00	17:02	CON	J-34	13:07:08	13:07:47	I	
1/31/2014	47.75239	122.72501	8:00	17:02	CON	J-34	13:13:29	13:13:59	I	
1/31/2014	47.75049	122.72598	8:00	17:02	CON	AB-10	14:56:24	15:08:46	V	
1/31/2014	47.75056	122.7248	8:00	17:02	CON	VX-10	15:09:37	15:25:00	V	
1/31/2014	47.75056	122.7248	8:00	17:02	CON	VX-10	15:25:54	15:41:06	V	
1/31/2014	47.75049	122.72598	8:00	17:02	CON	AB-10	16:06:34	16:06:35	SSI	
1/31/2014	47.75049	122.72598	8:00	17:02	CON	AB-10	16:07:26	16:07:28	SSI	
1/31/2014	47.75049	122.72598	8:00	17:02	CON	AB-10	16:08:13	16:08:14	SSI	
1/31/2014	47.75049	122.72598	8:00	17:02	CON	AB-10	16:11:38	16:11:40	I	
1/31/2014	47.75049	122.72598	8:00	17:02	CON	AB-10	16:12:23	16:12:25	I	
1/31/2014	47.75049	122.72598	8:00	17:02	CON	AB-10	16:18:28	16:18:32	I	

Date	Latitude	Longitude	Time Effort Initiated	Time Effort Completed	Event Code	Pile	Start Time	End Time	Const Type	Comments
1/31/2014	47.75049	122.72598	8:00	17:02	CON	AB-10	16:19:19	16:19:20	I	
1/31/2014	47.75049	122.72598	8:00	17:02	CON	AB-10	16:20:06	16:20:09	I	
1/31/2014	47.75049	122.72598	8:00	17:02	CON	AB-10	16:20:56	16:20:58	I	
1/31/2014	47.75049	122.72598	8:00	17:02	CON	AB-10	16:21:47	16:21:48	I	
1/31/2014	47.75049	122.72598	8:00	17:02	CON	AB-10	16:22:35	16:22:38	I	
1/31/2014	47.75049	122.72598	8:00	17:02	CON	AB-10	16:23:26	16:23:28	I	
1/31/2014	47.75049	122.72598	8:00	17:02	CON	AB-10	16:24:15	16:24:17	I	
1/31/2014	47.75049	122.72598	8:00	17:02	CON	AB-10	16:25:04	16:25:06	I	
1/31/2014	47.75049	122.72598	8:00	17:02	CON	AB-10	16:25:54	16:25:55	I	
1/31/2014	47.75049	122.72598	8:00	17:02	CON	AB-10	16:26:44	16:26:46	I	
1/31/2014	47.75049	122.72598	8:00	17:02	CON	AB-10	16:27:34	16:27:36	I	
1/31/2014	47.75049	122.72598	8:00	17:02	CON	AB-10	16:28:25	16:28:26	I	
1/31/2014	47.75049	122.72598	8:00	17:02	CON	AB-10	16:29:14	16:29:15	I	
1/31/2014	47.75049	122.72598	8:00	17:02	CON	AB-10	16:30:21	16:30:23	I	
1/31/2014	47.75049	122.72598	8:00	17:02	CON	AB-10	16:31:29	16:31:30	I	
1/31/2014	47.75049	122.72598	8:00	17:02	CON	AB-10	16:32:20	16:32:22	I	
1/31/2014	47.75049	122.72598	8:00	17:02	POST		16:32:50	17:02:50	NONE	
2/1/2014	47.75049	122.72598	8:00	17:39	PRE		8:00:00	8:30:00	NONE	
2/1/2014	47.75049	122.72598	8:00	17:39	CON	AB-10	10:07:35	10:07:37	SSI	
2/1/2014	47.75049	122.72598	8:00	17:39	CON	AB-10	10:08:26	10:08:28	SSI	
2/1/2014	47.75049	122.72598	8:00	17:39	CON	AB-10	10:09:19	10:09:21	SSI	
2/1/2014	47.75049	122.72598	8:00	17:39	CON	AB-10	10:10:10	10:10:11	I	
2/1/2014	47.75049	122.72598	8:00	17:39	CON	AB-10	10:11:03	10:11:04	I	
2/1/2014	47.75049	122.72598	8:00	17:39	CON	AB-10	10:11:53	10:30:53	I	
2/1/2014	47.75056	122.7248	8:00	17:39	CON	VX-10	11:01:47	11:01:48	I	
2/1/2014	47.75056	122.7248	8:00	17:39	CON	VX-10	11:02:47	11:10:16	I	
2/1/2014	47.75206	122.72516	8:00	17:39	CON	Temp-2	14:52:12	14:53:37	V	24" pin pile extraction; 23m north (15deg) of my position
2/1/2014	47.75206	122.72516	8:00	17:39	CON	Temp-3	15:16:33	15:16:56	V	24" pin pile extraction; 18m NE (25deg) of my position
2/1/2014	47.75206	122.72516	8:00	17:39	CON	Temp-3	15:19:52	15:20:42	V	
2/1/2014	47.75206	122.72516	8:00	17:39	CON	Temp-4	15:40:07	15:41:04	V	24" pin pile extraction; 15m NE (35deg) of my position
2/1/2014	47.75049	122.72598	8:00	17:39	CON	AB-9	15:49:32	16:00:15	V	
2/1/2014	47.75056	122.7248	8:00	17:39	CON	VX-9	16:11:59	16:18:17	V	
2/1/2014	47.75056	122.7248	8:00	17:39	CON	VX-9	16:25:32	17:09:00	V	juv. DCCO surfaced 14m se of pile at 16:44
2/1/2014	47.75056	122.7248	8:00	17:39	POST		17:09:00	17:39:00	NONE	
2/3/2014	47.75044	122.726	8:11	12:15	PRE		8:11:00	8:26:00	NONE	
2/3/2014	47.75044	122.726	8:11	12:15	CON	AB-9	9:10:03	9:10:04	SSI	

Date	Latitude	Longitude	Time Effort Initiated	Time Effort Completed	Event Code	Pile	Start Time	End Time	Const Type	Comments
2/3/2014	47.75044	122.726	8:11	12:15	CON	AB-9	9:10:54	9:10:55	SSI	
2/3/2014	47.75044	122.726	8:11	12:15	CON	AB-9	9:12:04	9:12:05	SSI	
2/3/2014	47.75044	122.726	8:11	12:15	CON	AB-9	9:12:55	9:13:26	I	
2/3/2014	47.75044	122.726	8:11	12:15	CON	AB-9	9:14:23	9:14:26	I	
2/3/2014	47.75044	122.726	8:11	12:15	CON	AB-9	9:15:15	9:15:18	I	
2/3/2014	47.75044	122.726	8:11	12:15	CON	AB-9	9:16:09	9:16:13	I	
2/3/2014	47.75044	122.726	8:11	12:15	CON	AB-9	9:17:01	9:17:03	I	
2/3/2014	47.75044	122.726	8:11	12:15	CON	AB-9	9:17:54	9:17:56	I	
2/3/2014	47.75044	122.726	8:11	12:15	CON	AB-9	9:18:46	9:18:49	I	
2/3/2014	47.75044	122.726	8:11	12:15	CON	AB-9	9:19:41	9:19:44	I	
2/3/2014	47.75044	122.726	8:11	12:15	CON	AB-9	9:20:35	9:20:38	I	
2/3/2014	47.75044	122.726	8:11	12:15	CON	AB-9	9:21:28	9:21:30	I	
2/3/2014	47.75044	122.726	8:11	12:15	CON	AB-9	9:22:22	9:22:24	I	
2/3/2014	47.75044	122.726	8:11	12:15	CON	AB-9	9:23:23	9:23:26	I	
2/3/2014	47.75044	122.726	8:11	12:15	CON	AB-9	9:24:16	9:41:33	I	
2/3/2014	47.75044	122.726	8:11	12:15	POST		11:45:00	12:15:00	NONE	
2/4/2014	47.75056	122.7248	8:20	16:36	PRE		8:20:00	8:35:00	NONE	
2/4/2014	47.75056	122.7248	8:20	16:36	CON	VX-11	8:54:54	9:01:13	V	
2/4/2014	47.75056	122.7248	8:20	16:36	CON	VX-11	9:03:07	9:03:45	V	
2/4/2014	47.75056	122.7248	8:20	16:36	CON	VX-11	10:53:37	10:53:38	SSI	1035-1045 Rig-3 stabbing pile
2/4/2014	47.75056	122.7248	8:20	16:36	CON	VX-11	10:54:43	10:54:44	SSI	
2/4/2014	47.75056	122.7248	8:20	16:36	CON	VX-11	10:55:49	10:55:50	SSI	
2/4/2014	47.75056	122.7248	8:20	16:36	CON	VX-11	10:56:55	11:10:57	I	
2/4/2014	47.75049	122.72598	8:20	16:36	CON	AB-11	11:57:02	12:02:07	V	
2/4/2014	47.75049	122.72598	8:20	16:36	CON	AB-11	13:42:55	13:42:56	SSI	
2/4/2014	47.75049	122.72598	8:20	16:36	CON	AB-11	13:43:40	13:43:41	SSI	
2/4/2014	47.75049	122.72598	8:20	16:36	CON	AB-11	13:44:25	13:44:26	SSI	
2/4/2014	47.75049	122.72598	8:20	16:36	CON	AB-11	13:45:13	14:05:03	I	
2/4/2014	47.75021	122.7253	8:20	16:36	CON	Temp-1	13:55:42	13:58:58	V	
2/4/2014	47.75021	122.7253	8:20	16:36	CON	Temp-2	14:21:56	14:23:19	V	
2/4/2014	47.75021	122.7253	8:20	16:36	CON	Temp-3	15:47:35	15:51:39	V	
2/4/2014	47.75021	122.7253	8:20	16:36	CON	Temp-4	15:57:35	16:00:16	V	
2/4/2014	47.75021	122.7253	8:20	16:36	CON	Temp-4	16:04:36	16:06:07	V	
2/5/2014	47.75021	122.72489	8:20	17:42	PRE		8:20:00	8:35:00	NONE	
2/5/2014	47.75021	122.72489	8:20	17:42	CON	VX-2	9:07:30	9:12:53	V	
2/5/2014	47.75021	122.72489	8:20	17:42	CON	VX-2	9:15:08	9:57:17	V	
2/5/2014	47.75045	122.72602	8:20	17:42	CON	AB-12	9:36:24	9:51:58	V	
2/5/2014	47.75021	122.72489	8:20	17:42	CON	VX-2	9:57:59	10:02:25	V	
2/5/2014	47.75021	122.72489	8:20	17:42	CON	VX-2	10:10:06	10:31:36	V	
2/5/2014	47.75225	122.72499	8:20	17:42	CON	L-37	10:17:10	10:17:11	SSI	

Date	Latitude	Longitude	Time Effort Initiated	Time Effort Completed	Event Code	Pile	Start Time	End Time	Const Type	Comments
2/5/2014	47.75225	122.72499	8:20	17:42	CON	L-37	10:18:06	10:18:07	SSI	
2/5/2014	47.75225	122.72499	8:20	17:42	CON	L-37	10:19:00	10:19:01	SSI	
2/5/2014	47.75225	122.72499	8:20	17:42	CON	L-37	10:19:56	10:37:37	I	
2/5/2014	47.75225	122.72499	8:20	17:42	CON	N-36	11:03:17	11:03:51	I	
2/5/2014	47.75225	122.72499	8:20	17:42	CON	N-36	11:08:11	11:08:55	I	
2/5/2014	47.75225	122.72499	8:20	17:42	CON	L-36	11:17:21	11:18:36	I	
2/5/2014	47.75017	122.72616	8:20	17:42	CON	AB-12	11:24:22	11:24:24	I	
2/5/2014	47.75017	122.72616	8:20	17:42	CON	AB-12	11:25:12	11:44:40	I	
2/5/2014	47.75225	122.72499	8:20	17:42	CON	J-36	11:50:28	11:51:29	I	
2/5/2014	47.75225	122.72499	8:20	17:42	CON	J-35	12:16:28	12:17:28	I	
2/5/2014	47.75225	122.72499	8:20	17:42	CON	J-33	12:34:48	12:35:55	I	
2/5/2014	47.75021	122.72489	8:20	17:42	CON	VX-4	14:39:46	15:01:38	V	
2/5/2014	47.75021	122.72489	8:20	17:42	CON	VX-4	16:43:47	16:43:49	SSI	
2/5/2014	47.75021	122.72489	8:20	17:42	CON	VX-4	16:44:49	16:44:50	SSI	
2/5/2014	47.75021	122.72489	8:20	17:42	CON	VX-4	16:45:49	16:45:50	SSI	
2/5/2014	47.75021	122.72489	8:20	17:42	CON	VX-4	16:46:50	17:12:07	I	
2/5/2014	47.75021	122.72489	8:20	17:42	POST		17:12:00	17:42:00	NONE	
2/6/2014	47.75021	122.72489	8:50	17:30	PRE		8:50:41	9:20:08	NONE	
2/6/2014	47.75021	122.72489	8:50	17:30	CON	B-9	10:52:39	10:52:40	SSI	
2/6/2014	47.75021	122.72489	8:50	17:30	CON	B-9	10:53:39	10:53:40	SSI	
2/6/2014	47.75021	122.72489	8:50	17:30	CON	B-9	10:54:38	10:54:39	SSI	
2/6/2014	47.75021	122.72489	8:50	17:30	CON	B-9	10:55:35	11:01:02	I	
2/6/2014	47.75021	122.72489	8:50	17:30	CON	B-8	11:20:20	11:23:39	I	
2/6/2014	47.75021	122.72489	8:50	17:30	CON	VX-1	11:37:13	12:04:14	V	
2/6/2014	47.75021	122.72489	8:50	17:30	CON	B-10	11:43:17	11:49:30	I	
2/6/2014	47.75021	122.72489	8:50	17:30	CON	VX-1	12:06:16	12:21:24	V	
2/6/2014	47.75021	122.72489	8:50	17:30	CON	B-11	12:24:08	12:24:09	SSI	
2/6/2014	47.75021	122.72489	8:50	17:30	CON	B-11	12:25:00	12:25:01	SSI	
2/6/2014	47.75021	122.72489	8:50	17:30	CON	B-11	12:25:53	12:25:55	SSI	
2/6/2014	47.75029	122.72605	8:50	17:30	CON	AB-5	16:14:03	17:00:04	V	
2/6/2014	47.75021	122.72489	8:50	17:30	CON	VX-1	16:35:13	16:35:14	SSI	
2/6/2014	47.75021	122.72489	8:50	17:30	CON	VX-1	16:36:33	16:36:34	SSI	
2/6/2014	47.75021	122.72489	8:50	17:30	CON	VX-1	16:37:43	16:37:44	SSI	
2/6/2014	47.75021	122.72489	8:50	17:30	CON	VX-1	16:39:08	16:39:09	I	
2/6/2014	47.75021	122.72489	8:50	17:30	CON	VX-1	16:40:18	16:40:20	I	
2/6/2014	47.75021	122.72489	8:50	17:30	CON	VX-1	16:41:32	16:41:33	I	
2/6/2014	47.75021	122.72489	8:50	17:30	CON	VX-1	16:42:50	16:42:52	I	
2/6/2014	47.75021	122.72489	8:50	17:30	CON	VX-1	16:44:08	16:44:09	I	
2/6/2014	47.75021	122.72489	8:50	17:30	CON	VX-1	16:45:14	16:45:15	I	
2/6/2014	47.75021	122.72489	8:50	17:30	CON	VX-1	16:46:18	16:46:20	I	

Date	Latitude	Longitude	Time Effort Initiated	Time Effort Completed	Event Code	Pile	Start Time	End Time	Const Type	Comments
2/6/2014	47.75021	122.72489	8:50	17:30	CON	VX-1	16:47:22	16:47:23	I	
2/6/2014	47.75021	122.72489	8:50	17:30	CON	VX-1	16:54:24	16:54:25	I	
2/6/2014	47.75021	122.72489	8:50	17:30	CON	VX-1	16:55:27	16:55:29	I	
2/6/2014	47.75021	122.72489	8:50	17:30	CON	VX-1	16:56:34	16:56:35	I	
2/6/2014	47.75021	122.72489	8:50	17:30	CON	VX-1	16:57:39	16:57:40	I	
2/6/2014	47.75021	122.72489	8:50	17:30	CON	VX-1	16:59:00	16:59:01	I	
2/6/2014	47.75021	122.72489	8:50	17:30	CON	VX-1	17:00:08	17:00:09	I	
2/6/2014	47.75029	122.72605	8:50	17:30	POST		17:00:34	17:30:42	NONE	
2/7/2014	47.74982	122.72349	7:45	17:08	PRE		7:45:00	8:15:00	NONE	
2/7/2014	47.74982	122.72349	7:45	17:08	CON	VX-1	8:19:48	8:19:51	SSI	
2/7/2014	47.74982	122.72349	7:45	17:08	CON	VX-1	8:21:14	8:21:15	SSI	
2/7/2014	47.74982	122.72349	7:45	17:08	CON	VX-1	8:22:25	8:22:28	SSI	
2/7/2014	47.74982	122.72349	7:45	17:08	CON	VX-1	8:23:36	8:23:41	I	
2/7/2014	47.74982	122.72349	7:45	17:08	CON	VX-1	8:24:53	8:45:49	I	
2/7/2014	47.7501	122.72614	7:45	17:08	CON	AB-5	9:28:53	9:28:54	SSI	
2/7/2014	47.7501	122.72614	7:45	17:08	CON	AB-5	9:29:46	9:29:47	SSI	
2/7/2014	47.7501	122.72614	7:45	17:08	CON	AB-5	9:30:37	9:30:38	SSI	
2/7/2014	47.7501	122.72614	7:45	17:08	CON	AB-5	9:31:26	9:41:41	I	
2/7/2014	47.7501	122.72614	7:45	17:08	CON	D-2	12:22:37	12:23:46	V	Same monitoring location
2/7/2014	47.7501	122.72614	7:45	17:08	CON	D-2	13:06:16	13:21:18	V	
2/7/2014	47.7501	122.72614	7:45	17:08	CON	D-2	13:22:54	13:24:58	V	
2/7/2014	47.7501	122.72614	7:45	17:08	CON	E-2	13:37:58	13:38:27	V	
2/7/2014	47.7501	122.72614	7:45	17:08	CON	E-2	13:40:25	13:41:10	V	
2/7/2014	47.7501	122.72614	7:45	17:08	CON	E-2	13:48:51	13:58:37	V	
2/7/2014	47.7501	122.72614	7:45	17:08	CON	VX-3	14:29:34	14:29:53	V	
2/7/2014	47.7501	122.72614	7:45	17:08	CON	VX-3	14:32:26	14:43:08	V	
2/7/2014	47.7501	122.72614	7:45	17:08	CON	VX-3	14:45:15	15:10:26	V	
2/7/2014	47.7501	122.72614	7:45	17:08	CON	AB-7	14:59:11	16:33:01	V	
2/7/2014	47.7501	122.72614	7:45	17:08	CON	VX-3	16:23:12	16:23:13	SSI	
2/7/2014	47.7501	122.72614	7:45	17:08	CON	VX-3	16:24:11	16:38:11	SSI	
2/7/2014	47.7501	122.72614	7:45	17:08	CON	VX-3	16:25:13	16:25:14	SSI	
2/7/2014	47.7501	122.72614	7:45	17:08	CON	VX-3	16:26:13	16:38:13	I	
2/7/2014	47.7501	122.72614	7:45	17:08	POST		16:38:00	17:08:00	NONE	
2/8/2014	47.75024	122.72605	7:40	17:16	PRE		7:40:00	8:10:24	NONE	
2/8/2014	47.75024	122.72605	7:40	17:16	CON	AB-7	8:13:55	8:14:02	SSI	
2/8/2014	47.75024	122.72605	7:40	17:16	CON	AB-7	8:14:52	8:14:53	SSI	
2/8/2014	47.75024	122.72605	7:40	17:16	CON	AB-7	8:15:47	8:15:48	SSI	
2/8/2014	47.75024	122.72605	7:40	17:16	CON	AB-7	8:16:41	8:20:41	I	
2/8/2014	47.75109	122.72543	7:40	17:16	CON	B-12	10:50:08	10:50:09	SSI	
2/8/2014	47.75109	122.72543	7:40	17:16	CON	B-12	10:51:04	10:51:05	SSI	

Date	Latitude	Longitude	Time Effort Initiated	Time Effort Completed	Event Code	Pile	Start Time	End Time	Const Type	Comments
2/8/2014	47.75109	122.72543	7:40	17:16	CON	B-12	10:52:00	10:52:01	SSI	
2/8/2014	47.75109	122.72543	7:40	17:16	CON	B-12	10:52:55	10:53:00	I	Dead blow
2/8/2014	47.75109	122.72543	7:40	17:16	CON	B-12	10:53:53	11:04:36	I	
2/8/2014	47.75109	122.72543	7:40	17:16	CON	B-12	11:13:59	11:16:03	I	
2/8/2014	47.75109	122.72543	7:40	17:16	CON	B-13	11:30:19	11:35:36	I	
2/8/2014	47.75109	122.72543	7:40	17:16	CON	B-14	11:50:15	11:58:24	I	
2/8/2014	47.75109	122.72543	7:40	17:16	CON	B-15	12:19:05	12:22:23	I	
2/8/2014	47.75024	122.72565	7:40	17:16	CON	D-1	13:33:10	13:33:51	V	Out
2/8/2014	47.75024	122.72565	7:40	17:16	CON	D-1	13:51:57	13:55:44	V	
2/8/2014	47.75024	122.72565	7:40	17:16	CON	D-1	13:56:28	14:14:45	V	
2/8/2014	47.75024	122.72565	7:40	17:16	CON	VX-7	14:09:46	14:21:08	V	
2/8/2014	47.75024	122.72565	7:40	17:16	CON	VX-7	14:27:05	14:41:59	V	
2/8/2014	47.75024	122.72565	7:40	17:16	CON	AB-6	14:30:34	14:41:30	V	
2/8/2014	47.75024	122.72565	7:40	17:16	CON	E-1	14:33:05	14:35:16	V	
2/8/2014	47.75024	122.72565	7:40	17:16	CON	E-1	14:35:51	14:41:04	V	
2/8/2014	47.75024	122.72565	7:40	17:16	CON	E-1	14:41:32	15:00:07	V	
2/8/2014	47.75109	122.72543	7:40	17:16	CON	B-16	15:11:10	15:11:11	SSI	
2/8/2014	47.75109	122.72543	7:40	17:16	CON	B-16	15:12:03	15:12:07	SSI	
2/8/2014	47.75109	122.72543	7:40	17:16	CON	B-16	15:12:59	15:13:00	SSI	
2/8/2014	47.75109	122.72543	7:40	17:16	CON	B-16	15:13:49	15:16:09	I	
2/8/2014	47.75109	122.72543	7:40	17:16	CON	B-17	15:32:11	15:34:07	I	
2/8/2014	47.75109	122.72543	7:40	17:16	CON	B-18	15:50:20	15:52:42	I	
2/8/2014	47.75109	122.72543	7:40	17:16	CON	B-19	16:02:56	16:06:17	I	
2/8/2014	47.75024	122.72565	7:40	17:16	CON	VX-7	16:18:06	16:18:07	SSI	
2/8/2014	47.75024	122.72565	7:40	17:16	CON	VX-7	16:19:09	16:19:10	SSI	
2/8/2014	47.75024	122.72565	7:40	17:16	CON	VX-7	16:20:08	16:20:09	SSI	
2/8/2014	47.75024	122.72565	7:40	17:16	CON	VX-7	16:21:10	16:21:11	I	
2/8/2014	47.75024	122.72565	7:40	17:16	CON	VX-7	16:22:00	16:46:00	I	
2/8/2014	47.75109	122.72543	7:40	17:16	POST		16:46:47	17:16:49	NONE	
2/10/2014	47.75161	122.72536	8:15	15:40	PRE		8:15:36	8:46:08	NONE	
2/10/2014	47.75161	122.72536	8:15	15:40	CON	B-20	9:08:27	9:08:28	SSI	
2/10/2014	47.75161	122.72536	8:15	15:40	CON	B-20	9:09:23	9:09:24	SSI	
2/10/2014	47.75161	122.72536	8:15	15:40	CON	B-20	9:10:17	9:10:18	SSI	
2/10/2014	47.75161	122.72536	8:15	15:40	CON	B-20	9:11:16	9:14:34	I	
2/10/2014	47.75161	122.72536	8:15	15:40	CON	B-21	9:27:31	9:32:38	I	
2/10/2014	47.75161	122.72536	8:15	15:40	CON	B-22	9:43:25	9:46:31	I	
2/10/2014	47.75161	122.72536	8:15	15:40	CON	B-23	10:05:10	10:07:16	I	
2/10/2014			8:15	15:40	CON	AB-6	10:09:58	10:27:01	I	
2/10/2014	47.75026	122.72468	8:15	15:40	CON	VX-8	11:21:43	11:57:48	V	
2/10/2014			8:15	15:40	CON	F-1	12:03:39	12:25:21	V	

Date	Latitude	Longitude	Time Effort Initiated	Time Effort Completed	Event Code	Pile	Start Time	End Time	Const Type	Comments
2/10/2014			8:15	15:40	CON	F-1	12:29:27	12:52:07	V	
2/10/2014			8:15	15:40	CON	H-1	13:57:36	14:09:07	V	
2/10/2014	47.75026	122.72468	8:15	15:40	CON	VX-8	14:00:04	14:00:06	SSI	
2/10/2014	47.75026	122.72468	8:15	15:40	CON	VX-8	14:01:52	14:01:55	SSI	
2/10/2014	47.75026	122.72468	8:15	15:40	CON	VX-8	14:02:48	14:02:49	SSI	
2/10/2014	47.75026	122.72468	8:15	15:40	CON	VX-8	14:03:39	14:24:21	I	
2/10/2014			8:15	15:40	CON	H-1	14:09:55	14:17:51	V	
2/10/2014			8:15	15:40	CON	H-1	14:18:24	14:30:45	V	
2/10/2014			8:15	15:40	CON	H-1	14:33:28	14:54:10	V	
2/13/2014			7:15	17:46	PRE		7:15:00	7:45:00	NONE	
2/13/2014			7:15	17:46	CON	AB-8	7:50:57	7:51:21	V	
2/13/2014			7:15	17:46	CON	AB-8	8:31:14	8:59:16	V	
2/13/2014			7:15	17:46	CON	VX-6	9:04:35	9:04:51	V	Stopped to replace roller
2/13/2014			7:15	17:46	CON	VX-6	9:53:49	10:06:49	V	
2/13/2014			7:15	17:46	CON	AB-8	10:21:53	10:21:54	SSI	
2/13/2014			7:15	17:46	CON	AB-8	10:22:45	10:22:46	SSI	
2/13/2014			7:15	17:46	CON	AB-8	10:23:34	10:23:35	SSI	
2/13/2014			7:15	17:46	CON	AB-8	10:24:24	10:25:01	I	
2/13/2014			7:15	17:46	CON	AB-8	10:26:09	10:26:12	I	
2/13/2014			7:15	17:46	CON	AB-8	10:27:04	10:27:05	I	
2/13/2014			7:15	17:46	CON	AB-8	10:28:00	10:28:01	I	
2/13/2014			7:15	17:46	CON	AB-8	10:28:52	10:29:20	I	
2/13/2014			7:15	17:46	CON	AB-8	10:29:41	10:43:51	I	
2/13/2014			7:15	17:46	CON	VX-6	11:18:35	11:18:36	SSI	
2/13/2014			7:15	17:46	CON	VX-6	11:19:41	11:19:44	SSI	
2/13/2014			7:15	17:46	CON	VX-6	11:20:48	11:20:49	SSI	
2/13/2014			7:15	17:46	CON	VX-6	11:21:52	11:35:53	I	
2/13/2014			7:15	17:46	CON	F-2	12:40:30	12:58:26	V	
2/13/2014			7:15	17:46	CON	H-2	13:07:16	13:28:29	V	
2/13/2014			7:15	17:46	CON	D-1	14:06:10	14:06:11	SSI	
2/13/2014			7:15	17:46	CON	D-1	14:06:21	14:06:22	SSI	
2/13/2014			7:15	17:46	CON	D-1	14:07:07	14:07:08	SSI	
2/13/2014			7:15	17:46	CON	D-1	14:07:52	14:22:16	I	
2/13/2014			7:15	17:46	CON	VX-5	14:43:08	14:43:30	V	
2/13/2014			7:15	17:46	CON	VX-5	14:44:00	14:56:08	V	
2/13/2014			7:15	17:46	CON	VX-5	15:42:39	15:42:40	SSI	
2/13/2014			7:15	17:46	CON	VX-5	15:43:46	15:43:47	SSI	
2/13/2014			7:15	17:46	CON	VX-5	15:44:50	15:44:53	SSI	
2/13/2014			7:15	17:46	CON	VX-5	15:45:56	16:03:24	I	
2/13/2014			7:15	17:46	CON	D-2	16:34:19	16:34:20	SSI	

Date	Latitude	Longitude	Time Effort Initiated	Time Effort Completed	Event Code	Pile	Start Time	End Time	Const Type	Comments
2/13/2014			7:15	17:46	CON	D-2	16:35:09	16:35:10	SSI	
2/13/2014			7:15	17:46	CON	D-2	16:36:00	16:36:01	SSI	
2/13/2014			7:15	17:46	CON	D-2	16:36:53	16:36:54	I	
2/13/2014			7:15	17:46	CON	D-2	16:37:47	16:37:48	I	
2/13/2014			7:15	17:46	CON	D-2	16:38:42	16:57:50	I	
2/13/2014			7:15	17:46	CON	E-1	17:05:55	17:16:02	I	
2/13/2014			7:15	17:46	POST		17:16:00	17:46:00	NONE	
2/14/2014	47.75017	122.72576	7:00	16:54	PRE	Temp-1	7:00:00	7:30:58	NONE	
2/14/2014	47.75017	122.72576	7:00	16:54	CON	Temp-1	7:41:59	7:43:11	V	Out
2/14/2014	47.75017	122.72576	7:00	16:54	CON	Temp-1	7:45:00	7:47:41	V	In
2/14/2014	47.75017	122.72576	7:00	16:54	CON	Temp-1	7:54:07	7:55:16	V	Out
2/14/2014	47.75227	122.72514	7:00	16:54	CON	Temp-1	7:58:05	7:59:54	V	Attached to an underwater template, unable to vibe Out until divers disconnect
2/14/2014	47.75017	122.72576	7:00	16:54	CON	Temp-1	8:21:45	8:21:53	V	
2/14/2014	47.75017	122.72576	7:00	16:54	CON	Temp-2	8:29:08	8:31:20	V	
2/14/2014	47.75017	122.72576	7:00	16:54	CON	Temp-3	9:21:08	9:21:45	V	
2/14/2014	47.75017	122.72576	7:00	16:54	CON	Temp-3	9:24:19	9:26:28	V	
2/14/2014	47.75017	122.72576	7:00	16:54	CON	Temp-4	10:01:04	10:01:19	V	
2/14/2014	47.75017	122.72576	7:00	16:54	CON	Temp-4	10:02:31	10:04:44	V	
2/14/2014	47.75045	122.72472	7:00	16:54	CON	V-23	10:33:30	10:33:31	SSI	Spliced pile
2/14/2014	47.75045	122.72472	7:00	16:54	CON	V-23	10:34:52	10:34:53	SSI	
2/14/2014	47.75045	122.72472	7:00	16:54	CON	V-23	10:38:11	10:38:12	SSI	
2/14/2014	47.75045	122.72472	7:00	16:54	CON	V-23	10:39:32	10:40:18	I	
2/14/2014	47.75045	122.72472	7:00	16:54	CON	V-23	10:57:37	11:06:08	I	
2/14/2014	47.75045	122.72472	7:00	16:54	CON	V-23	11:11:24	11:24:46	I	
2/14/2014	47.75045	122.72472	7:00	16:54	CON	V-23	11:27:28	11:38:15	I	
2/14/2014	47.75045	122.72472	7:00	16:54	CON	X-13	12:13:02	12:13:03	SSI	Spliced pile
2/14/2014	47.75045	122.72472	7:00	16:54	CON	X-13	12:14:19	12:14:20	SSI	
2/14/2014	47.75045	122.72472	7:00	16:54	CON	X-13	12:15:38	12:15:39	SSI	
2/14/2014	47.75045	122.72472	7:00	16:54	CON	X-13	12:16:57	12:23:00	I	
2/14/2014	47.75045	122.72472	7:00	16:54	CON	V-8	12:55:44	12:55:45	SSI	Spliced pile
2/14/2014	47.75045	122.72472	7:00	16:54	CON	V-8	12:56:43	12:56:45	SSI	
2/14/2014	47.75045	122.72472	7:00	16:54	CON	V-8	12:57:35	12:57:36	SSI	
2/14/2014	47.75045	122.72472	7:00	16:54	CON	V-8	12:58:30	13:05:36	I	
2/14/2014	47.75023	122.72562	7:00	16:54	CON	E-2	14:31:07	14:31:08	SSI	
2/14/2014	47.75023	122.72562	7:00	16:54	CON	E-2	14:32:00	14:32:01	SSI	
2/14/2014	47.75023	122.72562	7:00	16:54	CON	E-2	14:32:51	14:32:52	SSI	
2/14/2014	47.75023	122.72562	7:00	16:54	CON	E-2	14:33:41	14:49:57	I	
2/14/2014	47.75023	122.72562	7:00	16:54	CON	E-2	14:53:46	14:54:38	I	

Date	Latitude	Longitude	Time Effort Initiated	Time Effort Completed	Event Code	Pile	Start Time	End Time	Const Type	Comments
2/14/2014	47.75023	122.72562	7:00	16:54	CON	E-1	15:00:19	15:06:54	I	
2/14/2014	47.75023	122.72562	7:00	16:54	CON	F-2	15:13:10	15:29:28	I	
2/14/2014	47.75023	122.72562	7:00	16:54	CON	H-1	15:35:59	15:47:53	I	
2/14/2014	47.75227	122.72514	7:00	16:54	CON	Temp-1	15:40:34	15:56:38	V	
2/14/2014			7:00	16:54	CON	Temp-1	15:58:27	16:01:01	V	
2/14/2014			7:00	16:54	CON	Temp-1	16:04:34	16:14:40	V	
2/14/2014	47.75227	122.72514	7:00	16:54	CON	Temp-1	16:10:31	16:11:04	V	
2/14/2014	47.75227	122.72514	7:00	16:54	CON	Temp-1	16:15:00	16:18:28	V	
2/14/2014	47.75227	122.72514	7:00	16:54	CON	Temp-1	16:24:04	16:24:13	V	
2/14/2014	47.75023	122.72562	7:00	16:54	CON	H-2	16:25:41	16:36:05	I	
2/14/2014	47.75023	122.72562	7:00	16:54	POST	NA	16:36:06	17:06:05	NONE	
2/15/2014			7:00	15:22	PRE		7:00:00	7:30:00	NONE	
2/15/2014			7:00	15:22	CON	Temp-1	7:20:17	7:20:19	V	
2/15/2014			7:00	15:22	CON	Temp-1	7:29:17	7:29:19	V	
2/15/2014			7:00	15:22	CON	Temp-1	7:30:22	7:30:27	V	
2/15/2014			7:00	15:22	CON	Temp-1	7:40:20	7:46:20	V	
2/15/2014			7:00	15:22	CON	Temp-1	7:48:36	7:56:43	V	
2/15/2014	47.75023	122.72562	7:00	15:22	CON	A-8	9:08:05	9:08:06	SSI	
2/15/2014	47.75023	122.72562	7:00	15:22	CON	A-8	9:09:01	9:09:02	SSI	
2/15/2014	47.75023	122.72562	7:00	15:22	CON	A-8	9:09:52	9:09:54	SSI	
2/15/2014	47.75023	122.72562	7:00	15:22	CON	A-8	9:11:00	9:21:11	I	
2/15/2014	47.75023	122.72562	7:00	15:22	CON	B-25	10:23:57	10:23:58	SSI	
2/15/2014	47.75023	122.72562	7:00	15:22	CON	B-25	10:24:50	10:24:53	SSI	
2/15/2014	47.75023	122.72562	7:00	15:22	CON	B-25	10:25:42	10:25:43	SSI	
2/15/2014	47.75023	122.72562	7:00	15:22	CON	B-25	10:28:34	10:36:38	I	
2/15/2014	47.75023	122.72562	7:00	15:22	CON	B-25	10:39:38	10:40:12	I	
2/15/2014	47.75023	122.72562	7:00	15:22	CON	A-25	10:48:34	10:51:34	I	
2/15/2014	47.75023	122.72562	7:00	15:22	CON	A-25	10:53:39	10:58:22	I	
2/15/2014	47.75023	122.72562	7:00	15:22	CON	A-25	11:00:47	11:01:13	I	
2/15/2014	47.75023	122.72562	7:00	15:22	CON	A-26	11:10:35	11:10:36	I	AKA: A.5-25.5
2/15/2014	47.75023	122.72562	7:00	15:22	CON	A-26	11:12:14	11:17:56	I	
2/15/2014			7:00	15:22	CON	Fender-1	11:12:34	11:12:44	V	
2/15/2014			7:00	15:22	CON	Fender-1	11:20:07	11:33:07	V	
2/15/2014	47.75023	122.72562	7:00	15:22	CON	A-26	11:24:55	11:25:22	I	
2/15/2014	47.75023	122.72562	7:00	15:22	CON	B-25.5	11:33:29	11:40:38	I	AKA: B.5-25.5 OR B-26
2/15/2014	47.75023	122.72562	7:00	15:22	CON	B-25.5	11:43:55	11:44:21	I	
2/15/2014			7:00	15:22	CON	Temp-1	13:37:33	13:40:45	V	
2/15/2014			7:00	15:22	CON	Temp-1	13:47:51	13:51:36	V	
2/15/2014			7:00	15:22	CON	Temp-1	14:27:20	14:29:23	V	
2/15/2014			7:00	15:22	CON	Temp-1	14:37:07	14:41:26	V	

Date	Latitude	Longitude	Time Effort Initiated	Time Effort Completed	Event Code	Pile	Start Time	End Time	Const Type	Comments
2/15/2014			7:00	15:22	CON	Temp-1	14:42:41	14:45:31	V	
2/15/2014			7:00	15:22	CON	Temp-1	14:47:22	14:52:40	V	
2/15/2014			7:00	15:22	POST		14:52:00	15:22:00	NONE	

APPENDIX C
Marine Mammal Sighting Form and Data Codes

Marine Mammal Observation Record Form

Lat: _____ **Long:** _____ **Page** ____ **of** ____

Project Name: _____ **Monitoring Location:** _____

Observer: _____ (Pier Location, Vessel-Based, Land Location, other) **Time Effort Initiated:** _____

Date: _____ **Vessel Name:** _____ **Time Effort Completed:** _____

Sighting Data

Event Code	Pile Number	Sighting Number (1 or 1.1 if resight)	Start/End time	Sighting cue	Species	Dist/Dir to Animal (from Observer) (m)	Dist to Pile (btwn animal & pile) (m)	# of Animals Group Size (best/min/max) # of Juveniles	Relative (to pile) Motion/Behavior Code (see code sheet)	Const Type During Sighting	Mitigation Type?	Visibility	% Glare	Weather Cond	Sea State and Wave Ht	Swell Dir	Behavior Change/Response to Activity/Comments
CON PRE POST WC MD MS			: : : :					/ / ___ juveniles	away toward parallel none	SSV SSI V I DB ST None OTHER	DE SD None	B P M G E			0-3ft 4-6ft 6+ft	N S W E	
CON PRE POST WC MD MS			: : : :					/ / ___ juveniles	away toward parallel none	SSV SSI V I DB ST None OTHER	DE SD None	B P M G E			0-3ft 4-6ft 6+ft	N S W E	
CON PRE POST WC MD MS			: : : :					/ / ___ juveniles	away toward parallel none	SSV SSI V I DB ST None OTHER	DE SD None	B P M G E			0-3ft 4-6ft 6+ft	N S W E	
CON PRE POST WC MD MS			: : : :					/ / ___ juveniles	away toward parallel none	SSV SSI V I DB ST None OTHER	DE SD None	B P M G E			0-3ft 4-6ft 6+ft	N S W E	
CON PRE POST WC MD MS			: : : :					/ / ___ juveniles	away toward parallel none	SSV SSI V I DB ST None OTHER	DE SD None	B P M G E			0-3ft 4-6ft 6+ft	N S W E	
CON PRE POST WC MD MS			: : : :					/ / ___ juveniles	away toward parallel none	SSV SSI V I DB ST None OTHER	DE SD None	B P M G E			0-3ft 4-6ft 6+ft	N S W E	
CON PRE POST WC MD MS			: : : :					/ / ___ juveniles	away toward parallel none	SSV SSI V I DB ST None OTHER	DE SD None	B P M G E			0-3ft 4-6ft 6+ft	N S W E	
CON PRE POST WC MD MS			: : : :					/ / ___ juveniles	away toward parallel none	SSV SSI V I DB ST None OTHER	DE SD None	B P M G E			0-3ft 4-6ft 6+ft	N S W E	

Sighting #=chronological number of sightings. If resight of same animal, then 1.2, 1.2, etc. WP (Waypoint)=GPS recording of lat/long, time/date stamp. Critical for vessel observers.

Marine Mammal Observer Form

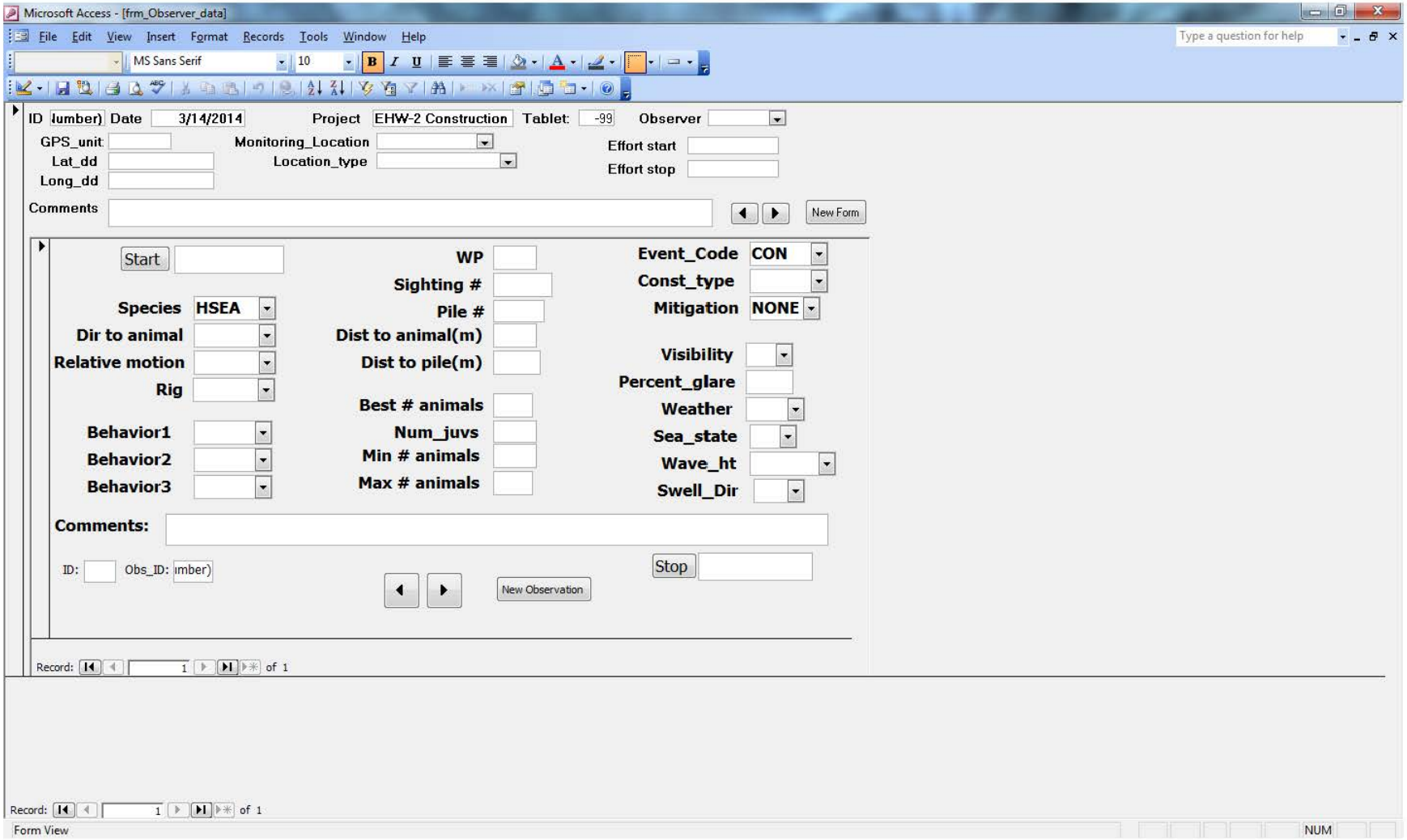

Sighting Codes

(Sighting Cue & Behavior Codes)

Code	Behavior	Definition
BR	Breaching	Leaps clear of water
CD	Change Direction	Suddenly changes direction of travel
CH	Chuff	Makes loud, forceful exhalation of air at surface
DI	Dive	Forward dives below surface
DE	Dead	Shows decomposition or is confirmed as dead by investigation
DS	Disorientation	An individual displaying multiple behaviors that have no clear direction or purpose
FI	Fight	Agonistic interactions between two or more individuals
FO	Foraging	Confirmed by food seen in mouth
MI	Milling	Moving slowly at surface, changing direction often, not moving in any particular direction
PL	Play	Behavior that does not seem to be directed towards a particular goal; may involve one, two or more individuals
PO	Porpoising	Moving rapidly with body breaking surface of water
SL	Slap	Vigorously slaps surface of water with body, flipper, tail, etc.
SP	Spyhopping	Rises vertically in the water to "look" above the water
SW	Swimming	General progress in a direction. Note general direction of travel when last seen [Example: "SW (N)"]
TR	Traveling	Traveling in an obvious direction. Note direction of travel when last seen [Example: "TR (N)" for traveling north]
UN	Unknown	Behavior of animal undetermined, does not fit into another behavior
Pinniped Only		
EW	Enter Water (from haul out)	Enters water from haul-out for no obvious reason
FL	Flush (from haul out)	Enters water in response to disturbance
HO	Haul out (from water)	Hauls out on land
RE	Resting	Resting onshore or on surface of water
LO	Look	Is upright in water "looking" in several directions or at a single focus
SI	Sink	Sinks out of sight below surface without obvious effort (usually from an upright position)
VO	Vocalizing	Animal emits barks, squeals, etc.
Cetacean only		
LG	Logging	Resting on surface of water with no obvious signs of movement

Event Codes	
Code	**Activity Type**
CON	Construction
PRE	Pre Watch
POST	Post Watch
WC	Weather Change
MD	Mitigation Delay
MS	Mitigation Shutdown

Mitigation Codes	
Code	**Activity Type**
DE	Delay onset of Pile Driving
SD	Shut down Pile Driving

Visibility	
Code	**Distance Visible**
B	Bad (<0.5km)
P	Poor (0.5-1.5km)
M	Moderate (1.5-10km)
G	Good (10-15km)
E	Excellent (>15km)

Glare

Percent glare should be the total glare of observers' area of responsibility. This will provide needed information on what percentage of the field of view was poor due to glare.

Marine Mammal Species	
Code	**Species**
CASL	California Sea Lion
HSEA	Harbor Seal
STSL	Steller Sea Lion
HPOR	Harbor Porpoise
DPOR	Dall's Porpoise
ORCA	Orca
HUMP	Humpback Whale
UNLW	Unknown Large Whale
OTHR	Other
UNKW	Unknown

Weather conditions	
Code	**Species**
S	Sunny
PC	Partly Cloudy
L	Light Rain
R	Steady Rain
F	Fog
OC	Overcast

Construction Type	
Code	**Activity Type**
SSV	Soft Start (Vibratory)
SSI	Soft Start (Impact)
V	Vibratory Pile Driving
I	Impact Pile Driving
DB	Dead Blow
ST	Stabbing
NONE	No Pile Driving
OTH	Other

Sea State and Wave Height

Use Beaufort Sea State Scale for Sea State Code. This refers to the surface layer and whether it is glassy in appearance or full of white caps. In the open ocean, it also takes into account the wave height or swell, but in inland waters the wave height (swells) may never reach the levels that correspond to the correct surface white cap number. Therefore, include wave height for clarity.

Code	Wave Height
Light	0-3 ft
Moderate	4-6 ft
Heavy	>6 ft

Swell Direction

Swell direction should be where the swell is coming from (S for coming from the south). If possible, record direction relative to fixed location (pier). Choose this location at beginning of monitoring project.

APPENDIX B
BEAUFORT SEA STATE SCALE

US Navy and Beaufort Sea State Codes (http://ioc.unesco.org and http://www.wrh.noaa.gov/pqr/info/beaufort.php)

Beaufort SS	Wind speed (knots)	Wind description	Wave height (ft) Beaufort	Sea State – Beaufort	Notes specific to on-water seabird observations	Photos indicating Beaufort Sea State
0	<1	Calm	0	Calm; like a mirror	Excellent conditions, no wind, small or very smooth swell. You have the impression you could see anything.	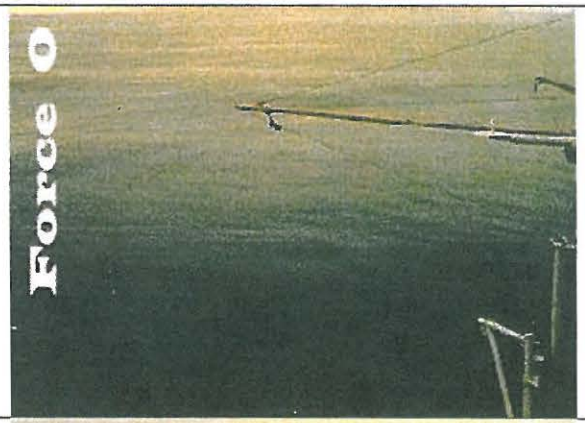
1	1-3	Light air	¼ < ½	Ripples with appearance of scales; no foam crests	Very good conditions, surface could be glassy (Beaufort 0), but with some lumpy swell or reflection from forests, glare, etc.	

Beaufort SS	Wind speed (knots)	Wind description	Wave height (ft) Beaufort	Sea State – Beaufort	Notes specific to on-water seabird observations	Photos indicating Beaufort Sea State
2	4-6	Light breeze	½ – 1 (max 1)	Small wavelets; crests with glassy appearance, not breaking	Good conditions, no whitecaps; texture/lighting contrast of water make murrelets hard to see. Surface could also be glassy or have small ripples, but with a short, lumpy swell, thick fog, etc.	
3	7-10	Gentle breeze	2 – 3 (max 3)	Large wavelets; crests begin to break; scattered whitecaps	Fair conditions, scattered whitecaps, detection of murrelets definitely compromised; a hit-or-miss chance of seeing them owing to water choppiness and high contrast. This could also occur at lesser wind with a very short wavelength, choppy swell.	

Beaufort SS	Wind speed (knots)	Wind description	Wave height (ft) Beaufort	Sea State – Beaufort	Notes specific to on-water seabird observations	Photos indicating Beaufort Sea State
4	11-16	Moderate breeze	3 ½ – 5 (max 5)	Small waves becoming longer, numerous whitecaps	Whitecaps abundant, sea chop bouncing the boat around, etc.	
5	17-20	Fresh breeze	6 – 8 (max 8)	Moderate waves, taking longer form; many whitecaps; some spray		

APPENDIX D

Pile Survey Table

Appendix D
Permanent Piles Installed during the Year 2 EHW-2 CMP

Pile	Width(In)	Length (ft)	Plan Easting	Plan Northing	Vibe Drive Date	Re-Vibe Drive Date	Impact Drive Date	Impact Blow Count	Second Impact Date	Re-Impact Blow Count	Restrike Date	Restrike Blow Count	Second Restrike Date	Second Restrike Blow Count
A-1	48	184	1174888.242	279427.978	10/19/2013	-	1/2/2014	416	-	-	-	-	-	-
A-10	48	174	1174922.69	279645.2648	10/29/2013	-	1/16/2014	706	-	-	-	-	-	-
A-11	48	-	1174926.605	279669.9564	10/29/2013	-	1/16/2014	603	-	-	-	-	-	-
A-12	48	-	1174930.52	279694.6481	10/29/2013	-	1/16/2014	333	-	-	-	-	-	-
A-13	48	-	1174934.434	279719.3398	10/30/2013	-	1/17/2014	458	-	-	-	-	-	-
A-14	48	-	1174938.349	279744.0314	10/30/2013	-	1/17/2014	348	-	-	-	-	-	-
A-15	48	-	1174942.263	279768.7231	10/30/2013	-	1/17/2014	344	-	-	-	-	-	-
A-16	48	-	1174946.178	279793.4148	10/31/2013	-	1/17/2014	290	-	-	-	-	-	-
A-17	48	-	1174950.092	279818.1064	10/31/2013	-	1/17/2014	351	-	-	-	-	-	-
A-18	48	-	1174954.007	279842.7981	11/1/2013	-	1/18/2014	407	-	-	-	-	-	-
A-19	48	-	1174957.922	279867.4898	11/1/2013	-	1/18/2014	235	-	-	-	-	-	-
A-2	48	-	1174892.157	279452.6697	10/21/2013	-	12/31/2013	396	-	-	-	-	-	-
A-20	48	-	1174961.836	279892.1814	11/1/2013	-	1/18/2014	347	-	-	-	-	-	-
A-21	48	-	1174965.751	279916.8731	11/4/2013	-	1/22/2014	334	-	-	-	-	-	-
A-22	48	-	1174969.665	279941.5648	11/4/2013	-	1/22/2014	305	-	-	-	-	-	-
A-23	48	-	1174973.58	279966.2564	11/5/2013	-	1/22/2014	429	-	-	-	-	-	-
A-24	48	-	1174977.495	279990.9481	11/5/2013	-	1/22/2014	491	-	-	-	-	-	-
A-25	48	-	1174980.626	280010.7014	11/5/2013	-	2/15/2014	313	-	-	-	-	-	-
A-26	48	-	1174983.184	280026.8334	11/6/2013	-	2/15/2014	246	-	-	-	-	-	-
A-3	48	-	1174895.288	279472.423	10/22/2013	-	12/31/2013	653	-	-	-	-	-	-
A-4	48	-	1174899.203	279497.1148	10/24/2013	-	1/2/2014	410	-	-	-	-	-	-
A-5	48	-	1174903.117	279521.8064	10/25/2013	-	1/3/2014	495	-	-	-	-	-	-
A-6	48	-	1174907.032	279546.498	10/25/2013	-	1/3/2014	520	-	-	-	-	-	-
A-7	48	-	1174910.947	279571.1898	10/25/2013	-	1/15/2014	800	-	-	-	-	-	-
A-8	48	-	1174914.861	279595.8814	10/26/2013	-	1/15/2014	544	2/15/2014	387	-	-	-	-
A-9	48	-	1174918.776	279620.573	10/26/2013	-	1/15/2014	642	-	-	-	-	-	-
AB-1	36	-	1174899.684	279436.2888	1/27/2014	-	1/27/2014	702	-	-	-	-	-	-
AB-10	36	-	1174904.966	279485.5698	1/31/2014	-	1/31/2014	759	-	-	-	-	-	-
AB-11	36	-	1174909.278	279480.8362	2/4/2014	-	2/4/2014	779	-	-	-	-	-	-
AB-12	36	-	1174909.904	279484.7868	2/5/2014	-	2/5/2014	734	-	-	-	-	-	-
AB-2	36	-	1174897.607	279439.1494	1/28/2014	-	1/28/2014	499	1/29/2014	97	-	-	-	-
AB-3	36	-	1174900.467	279441.2272	1/30/2014	-	1/30/2014	694	-	-	-	-	-	-
AB-4	36	-	1174902.545	279438.3665	1/25/2014	-	1/26/2014	1006	-	-	-	-	-	-
AB-5	36	-	1174900.817	279459.3967	2/6/2014	-	2/7/2014	391	-	-	-	-	-	-
AB-6	36	-	1174901.443	279463.3474	2/8/2014	-	2/10/2014	658	-	-	-	-	-	-
AB-7	36	-	1174905.755	279458.6138	2/7/2014	-	2/8/2014	151	-	-	-	-	-	-
AB-8	36	-	1174906.381	279462.5645	2/13/2014	-	2/13/2014	581	-	-	-	-	-	-
AB-9	36	-	1174904.34	279481.6191	2/1/2014	-	2/3/2014	704	-	-	-	-	-	-
B-1	48	182	1174907.995	279424.8464	7/22/2013	-	7/27/2013	1326	7/29/2013	-	-	-	-	-

Pile	Width(In)	Length (ft)	Plan Easting	Plan Northing	Vibe Drive Date	Re-Vibe Drive Date	Impact Drive Date	Impact Blow Count	Second Impact Date	Re-Impact Blow Count	Restrike Date	Restrike Blow Count	Second Restrike Date	Second Restrike Blow Count
B-10	48	172	1174942.444	279642.133	10/26/2013	-	1/16/2014	818	2/6/2014	227	-	-	-	-
B-11	48	-	1174946.358	279666.8248	10/29/2013	-	1/16/2014	631	-	-	-	-	-	-
B-12	48	-	1174950.273	279691.5164	10/29/2013	-	1/16/2014	168	2/8/2014	487	-	-	-	-
B-13	48	-	1174954.187	279716.208	10/29/2013	-	1/16/2014	314	2/8/2014	195	-	-	-	-
B-14	48	-	1174958.102	279740.8998	10/30/2013	-	1/17/2014	280	2/8/2014	302	-	-	-	-
B-15	48	-	1174962.017	279765.5914	10/30/2013	-	1/17/2014	213	2/8/2014	122	-	-	-	-
B-16	48	-	1174965.931	279790.283	10/31/2013	-	1/17/2014	211	2/8/2014	79	-	-	-	-
B-17	48	-	1174969.846	279814.9748	10/31/2013	-	1/17/2014	396	2/8/2014	71	-	-	-	-
B-18	48	-	1174973.76	279839.6664	11/1/2013	-	1/18/2014	189	2/8/2014	87	-	-	-	-
B-19	48	-	1174977.675	279864.3581	11/1/2013	-	1/18/2014	300	2/8/2014	128	-	-	-	-
B-2	48	-	1174911.91	279449.538	10/21/2013	-	12/31/2013	483	2/8/2014	-	-	-	-	-
B-20	48	-	1174981.59	279889.0498	11/1/2013	-	1/18/2014	278	2/10/2014	121	-	-	-	-
B-21	48	-	1174985.504	279913.7414	11/1/2013	-	1/22/2014	312	2/10/2014	196	-	-	-	-
B-22	48	-	1174989.419	279938.4332	11/4/2013	-	1/22/2014	433	2/10/2014	117	-	-	-	-
B-23	48	-	1174993.333	279963.1248	11/3/2013	-	1/22/2014	392	2/10/2014	77	-	-	-	-
B-24	48	178	1174997.248	279987.8164	7/17/2013	-	7/26/2013	1056	8/21/2013	230	-	-	-	-
B-25	36	-	1175000.38	280007.5698	11/5/2013	-	2/15/2014	337	-	-	-	-	-	-
B-3	48	-	1174915.042	279469.2914	10/22/2013	-	12/31/2013	882	-	-	-	-	-	-
B-4	48	-	1174918.956	279493.983	10/23/2013	-	1/2/2014	538	-	-	-	-	-	-
B-5	48	-	1174922.871	279518.6748	10/25/2013	-	1/3/2014	340	1/15/2014	397	-	-	-	-
B-6	48	-	1174926.785	279543.3664	10/25/2013	-	1/3/2014	704	1/15/2014	399	-	-	-	-
B-7	48	-	1174930.7	279568.058	10/25/2013	-	1/3/2014	741	1/15/2014	125	-	-	-	-
B-8	48	-	1174934.615	279592.7498	10/25/2013	-	1/15/2014	501	1/15/2014	120	-	-	-	-
B-9	48	-	1174938.529	279617.4414	10/26/2013	-	1/15/2014	476	2/6/2014	203	-	-	-	-
C-1	36	180	279421.018	1174919.369	7/23/2013	-	7/27/2013	958	7/29/2013	51	-	-	-	-
C-2	36	-	279447.685	1174923.597	10/21/2013	-	1/2/2014	572	1/29/2014	32	-	-	-	-
C-3	36	-	279464.969	1174926.337	10/21/2013	-	1/2/2014	543	-	-	-	-	-	-
J-1	48	160	1175021.083	279406.9176	10/16/2013	-	12/24/2013	241	-	-	-	-	-	-
J-10	48	158	1175055.531	279624.2043	9/23/2013	-	1/9/2014	290	-	-	-	-	-	-
J-11	48	-	1175059.446	279648.896	9/18/2013	-	1/24/2014	572	-	-	-	-	-	-
J-12	48	-	1175063.361	279673.5876	9/18/2013	-	1/24/2014	449	-	-	-	-	-	-
J-13	48	-	1175067.275	279698.2793	9/12/2013	-	9/17/2013	370	-	-	-	-	-	-
J-14	48	-	1175071.19	279722.971	9/10/2013	-	1/24/2014	266	-	-	-	-	-	-
J-15	48	-	1175075.104	279747.6626	9/9/2013	-	1/23/2014	499	-	-	-	-	-	-
J-16	48	-	1175079.019	279772.3543	9/6/2013	-	1/23/2014	477	-	-	-	-	-	-
J-17	48	-	1175082.934	279797.046	9/6/2013	-	1/23/2014	280	-	-	-	-	-	-
J-18	48	-	1175086.848	279821.7376	9/4/2013	-	9/5/2013	185	-	-	-	-	-	-
J-19	48	160	1175090.763	279846.4294	8/29/2013	-	9/5/2013	493	-	-	-	-	-	-
J-2	48	-	1175024.998	279431.6092	10/14/2013	-	12/23/2013	286	-	-	-	-	-	-
J-20	48	160	1175094.677	279871.121	8/27/2013	-	8/28/2013	269	-	-	-	-	-	-
J-21	48	160	1175098.592	279895.8126	8/22/2013	-	8/26/2013	269	11/14/2013	449	11/15/2013	205	-	-

Pile	Width(In)	Length (ft)	Plan Easting	Plan Northing	Vibe Drive Date	Re-Vibe Drive Date	Impact Drive Date	Impact Blow Count	Second Impact Date	Re-Impact Blow Count	Restrike Date	Restrike Blow Count	Second Restrike Date	Second Restrike Blow Count
J-22	48	162	1175102.507	279920.5044	8/21/2013	-	8/26/2013	140	11/15/2013	219	-	-	-	-
J-23	48	162	1175106.421	279945.196	8/19/2013	-	8/20/2013	270	8/21/2013	39	-	-	-	-
J-24	48	162	1175110.336	279969.8876	8/16/2013	-	8/20/2013	221	-	-	-	-	-	-
J-25	48	162	1175114.25	279994.5794	8/14/2013	-	8/15/2013	500	-	-	-	-	-	-
J-26	48	162	1175118.165	280019.271	8/14/2013	-	8/15/2013	279	-	-	-	-	-	-
J-27	48	160	1175120.983	280037.049	11/11/2013	-	11/13/2013	150	-	-	-	-	-	-
J-28	36	150	1175122.397	280045.9654	8/9/2013	-	10/8/2013	131	1/25/2014	37	-	-	-	-
J-29	36	150	1175125.398	280064.8956	8/9/2013	-	10/8/2013	62	-	-	-	-	-	-
J-3	48	-	1175028.129	279451.3626	10/10/2013	-	12/23/2013	420	-	-	-	-	-	-
J-30	36	160	1175128.399	280083.8258	8/9/2013	-	10/8/2013	109	1/25/2014	39	-	-	-	-
J-31	36	160	1175132.705	280110.9866	8/8/2013	-	10/7/2013	40	1/25/2014	77	-	-	-	-
J-32	36	158	1175137.011	280138.1474	8/7/2013	-	10/7/2013	114	1/25/2014	50	-	-	-	-
J-33	36	158	1175141.318	280165.3082	8/7/2013	-	10/7/2013	49	2/5/2014	43	-	-	-	-
J-34	36	158	1175145.624	280192.469	8/6/2013	-	10/7/2013	216	1/31/2014	99	-	-	-	-
J-35	36	156	1175149.93	280219.6297	8/6/2013	-	10/7/2013	209	2/5/2014	38	-	-	-	-
J-36	36	156	1175154.236	280246.7903	8/5/2013	-	10/4/2013	355	2/5/2014	39	-	-	-	-
J-37	36	158	1175158.542	280273.9511	8/5/2013	-	10/4/2013	248	-	-	-	-	-	-
J-38	36	158	1175162.848	280301.1121	8/3/2013	-	10/4/2013	313	-	-	-	-	-	-
J-39	36	158	1175167.154	280328.2729	8/3/2013	-	8/9/2013	287	-	-	-	-	-	-
J-4	48	-	1175032.044	279476.0542	10/8/2013	-	10/14/2013	405	-	-	-	-	-	-
J-40	36	156	1175171.46	280355.4336	8/2/2013	-	8/9/2013	216	-	-	10/4/2013	16	-	-
J-41	36	156	1175174.67	280375.6807	7/31/2013	-	8/9/2013	371	-	-	-	-	-	-
J-42	36	156	1175177.879	280395.9243	7/30/2013	-	8/1/2013	394	-	-	-	-	-	-
J-43	36	156	1175182.186	280423.0887	7/27/2013	-	7/29/2013	4	8/1/2014	546	-	-	-	-
J-44	36	156	1175186.492	280450.2495	7/24/2013	-	7/26/2013	338	-	-	-	-	-	-
J-5	48	-	1175035.959	279500.746	10/7/2013	-	10/9/2013	465	-	-	-	-	-	-
J-6	48	-	1175039.873	279525.4376	10/3/2013	-	10/9/2013	520	-	-	-	-	-	-
J-7	48	-	1175043.788	279550.1292	9/30/2013	-	10/2/2013	543	-	-	-	-	-	-
J-8	48	-	1175047.702	279574.821	9/26/2013	-	10/2/2013	769	-	-	-	-	-	-
J-9	48	-	1175051.617	279599.5126	9/25/2013	-	10/2/2013	797	-	-	-	-	-	-
L-28	36	150	1175136.224	280043.7732	8/9/2013	-	10/8/2013	122	-	-	-	-	-	-
L-29	36	158	1175139.225	280062.7035	8/9/2013	-	10/8/2013	143	1/25/2014	25	1/25/2014	22	-	-
L-30	36	158	1175142.227	280081.6337	8/8/2013	-	10/8/2013	76	1/25/2014	68	-	-	-	-
L-31	36	178	1175146.532	280108.7945	8/8/2013	-	10/7/2013	344	-	-	-	-	-	-
L-32	36	176	1175150.838	280135.9553	8/7/2013	-	10/7/2013	158	-	-	-	-	-	-
L-33	36	176	1175155.144	280163.1161	8/7/2013	-	10/7/2013	225	-	-	-	-	-	-
L-34	36	176	1175159.451	280190.2768	8/6/2013	-	10/7/2013	190	-	-	-	-	-	-
L-35	36	176	1175163.757	280217.4376	8/6/2013	-	10/7/2013	211	-	-	-	-	-	-
L-36	36	176	1175168.063	280244.5981	8/5/2013	-	2/5/2014	47	-	-	-	-	-	-
L-37	36	176	1175172.369	280271.759	8/5/2013	-	2/5/2014	674	-	-	-	-	-	-
L-38	36	176	1175176.675	280298.9199	8/3/2013	-	9/13/2013	629	-	-	-	-	-	-

Pile	Width(In)	Length (ft)	Plan Easting	Plan Northing	Vibe Drive Date	Re-Vibe Drive Date	Impact Drive Date	Impact Blow Count	Second Impact Date	Re-Impact Blow Count	Restrike Date	Restrike Blow Count	Second Restrike Date	Second Restrike Blow Count
L-39	36	176	1175180.981	280326.0807	8/2/2013	-	8/9/2013	167	-	-	-	-	-	-
L-40	36	176	1175185.287	280353.2415	8/1/2013	-	8/9/2013	716	-	-	-	-	-	-
L-41	36	176	1175188.497	280373.4885	7/31/2013	-	8/9/2013	788	-	-	-	-	-	-
L-42	36	176	1175191.707	280393.7357	7/30/2013	-	8/1/2013	799	-	-	-	-	-	-
L-43	36	174	1175196.013	280420.8965	7/27/2013	-	8/1/2013	250	-	-	-	-	-	-
L-44	36	174	1175200.319	280448.0573	7/24/2013	-	10/4/2013	26	-	-	-	-	-	-
M-1	48	156	1175040.836	279403.7859	10/16/2013	-	12/24/2013	464	1/15/2014	95	-	-	-	-
M-10	48	156	1175075.285	279621.0726	9/23/2013	-	9/25/2013	748	-	-	-	-	-	-
M-11	48	-	1175079.199	279645.7643	9/18/2013	-	9/25/2013	280	-	-	-	-	-	-
M-12	48	-	1175083.114	279670.456	9/12/2013	-	9/17/2013	604	-	-	-	-	-	-
M-13	48	-	1175087.029	279695.1476	9/12/2013	-	9/17/2013	224	-	-	-	-	-	-
M-14	48	-	1175090.943	279719.8393	9/10/2013	-	1/24/2014	587	-	-	-	-	-	-
M-15	48	-	1175094.858	279744.531	9/9/2013	-	1/23/2014	663	-	-	-	-	-	-
M-16	48	-	1175098.772	279769.2226	9/6/2013	-	1/23/2014	506	-	-	-	-	-	-
M-17	48	-	1175102.687	279793.9143	9/6/2013	-	1/23/2014	525	-	-	-	-	-	-
M-18	48	-	1175106.602	279818.606	9/4/2013	-	9/5/2013	492	-	-	-	-	-	-
M-19	48	158	1175110.516	279843.2976	8/29/2013	-	9/5/2013	308	1/24/2014	160	-	-	-	-
M-2	48	-	1175044.751	279428.4776	10/11/2013	-	12/24/2013	726	-	-	-	-	-	-
M-20	48	158	1175114.431	279867.9893	8/27/2013	-	8/28/2013	242	-	-	-	-	-	-
M-21	48	158	1175118.345	279892.681	8/22/2013	-	8/26/2013	202	11/14/2013	219	-	-	-	-
M-22	48	158	1175122.26	279917.3726	8/21/2013	-	8/26/2013	225	11/15/2013	435	-	-	-	-
M-23	48	158	1175126.174	279942.0643	8/19/2013	-	8/20/2013	322	-	-	-	-	-	-
M-24	48	158	1175130.089	279966.756	8/16/2013	-	8/20/2013	250	-	-	-	-	-	-
M-25	48	160	1175134.004	279991.4476	8/14/2013	-	8/15/2013	189	-	-	-	-	-	-
M-26	48	160	1175137.918	280016.1393	8/13/2013	-	8/15/2013	300	-	-	-	-	-	-
M-27	48	158	1175140.737	280033.9173	11/11/2013	-	11/13/2013	157	-	-	-	-	-	-
M-3	48	-	1175047.883	279448.2309	10/10/2013	-	12/24/2013	708	-	-	-	-	-	-
M-4	48	-	1175051.797	279472.9226	10/8/2013	-	10/14/2013	191	-	-	-	-	-	-
M-5	48	-	1175055.712	279497.6143	10/7/2013	-	10/9/2013	640	-	-	-	-	-	-
M-6	48	-	1175059.626	279522.3059	10/3/2013	-	10/9/2013	785	1/9/2014	82	-	-	-	-
M-7	48	-	1175063.541	279546.9976	9/30/2013	-	10/2/2013	602	-	-	-	-	-	-
M-8	48	-	1175067.456	279571.6893	9/26/2013	-	10/2/2013	615	1/9/2014	190	-	-	-	-
M-9	48	-	1175071.37	279596.3809	9/25/2013	-	10/2/2013	599	1/9/2014	145	-	-	-	-
N-1	36	175	1175162.121	280117.713	1/8/2014	-	1/8/2014	454	-	-	-	-	-	-
N-10	36	173	1175192.354	280286.0563	12/10/2013	-	-	-	-	-	-	-	-	-
N-11	36	171	1175195.215	280288.134	12/6/2013	-	12/12/2013	-	-	-	-	-	-	-
N-12	36	167	1175197.293	280285.2733	12/16/2013	-	-	-	-	-	-	-	-	-
N-2	36	173	1175160.043	280120.5736	1/9/2014	-	1/10/2014	199	-	-	-	-	-	-
N-28	36	148	1175152.027	280041.2678	8/9/2013	-	10/8/2013	111	1/25/2014	24	-	-	-	-
N-29	36	148	1175155.028	280060.1981	8/9/2013	-	10/8/2013	69	1/25/2014	30	-	-	-	-
N-3	36	179.5	1175162.904	280122.6513	1/12/2014	-	-	-	-	-	-	-	-	-

Pile	Width(In)	Length (ft)	Plan Easting	Plan Northing	Vibe Drive Date	Re-Vibe Drive Date	Impact Drive Date	Impact Blow Count	Second Impact Date	Re-Impact Blow Count	Restrike Date	Restrike Blow Count	Second Restrike Date	Second Restrike Blow Count
N-30	36	156	1175158.029	280079.1283	8/8/2013	-	10/8/2013	114	1/25/2014	61	-	-	-	-
N-31	36	157.1	1175162.335	280106.2891	8/8/2013	-	11/12/2013	210	-	-	-	-	-	-
N-32	36	155	1175166.642	280133.4503	8/7/2013	-	11/12/2013	247	-	-	-	-	-	-
N-33	36	155	1175170.947	280160.6107	8/7/2013	-	11/12/2013	255	-	-	-	-	-	-
N-34	36	154.1	1175175.254	280187.7714	8/6/2013	-	11/12/2013	302	-	-	-	-	-	-
N-35	36	153.9	1175179.56	280214.9322	8/6/2013	-	11/12/2013	250	-	-	-	-	-	-
N-36	36	152	1175183.866	280242.0928	8/5/2013	-	10/4/2013	121	2/5/2014	51	-	-	-	-
N-37	36	154	1175188.172	280269.2536	8/5/2013	-	10/10/2013	80	-	-	-	-	-	-
N-38	36	174	1175192.478	280296.4146	8/3/2013	-	9/13/2013	383	-	-	-	-	-	-
N-39	36	174	1175196.784	280323.5753	8/2/2013	-	8/9/2013	630	-	-	-	-	-	-
N-4	36	171	1175164.981	280119.7906	1/9/2014	-	-	-	-	-	-	-	-	-
N-40	36	174	1175201.09	280350.7361	8/1/2013	-	8/5/2013	769	-	-	-	-	-	-
N-41	36	174	1175204.3	280370.9833	7/31/2013	-	8/5/2013	646	-	-	-	-	-	-
N-42	36	174	1175207.51	280391.2304	7/30/2013	-	8/1/2013	1074	-	-	-	-	-	-
N-43	36	174	1175211.816	280418.3912	7/27/2013	-	8/1/2013	786	-	-	-	-	-	-
N-44	36	172	1175216.122	280445.552	7/24/2013	-	7/26/2013	860	-	-	-	-	-	-
N-5	36	173	1175175.04	280199.1961	12/30/2013	-	-	-	-	-	-	-	-	-
N-6	36	177.5	1175172.962	280202.0567	12/27/2013	-	-	-	-	-	-	-	-	-
N-7	36	171	1175175.823	280204.1344	12/31/2013	-	-	-	-	-	-	-	-	-
N-8	36	167	1175177.901	280201.2738	1/2/2014	-	1/3/2014	41	-	-	-	-	-	-
N-9	36	175	1175194.432	280283.1956	12/2/2013	-	-	-	-	-	-	-	-	-
R.2-38	36	152	1175204.33	280294.5356	8/3/2013	-	9/3/2013	216	-	-	-	-	-	-
R.2-39	36	172	1175208.636	280321.6963	8/2/2013	-	9/3/2013	637	-	-	-	-	-	-
R.2-43	36	172	1175223.668	280416.5122	7/27/2013	-	8/1/2013	661	-	-	-	-	-	-
R.2-44	36	152	1175227.974	280443.6729	7/23/2013	-	7/25/2013	138	7/26/2013	741	-	-	-	-
R.4-40	36	172	1175215.905	280348.3874	8/1/2013	-	8/5/2013	640	-	-	9/13/2013	33	-	-
R.4-41	36	172	1175219.115	280368.6345	7/31/2013	-	8/5/2013	905	-	-	-	-	-	-
R.4-42	36	172	1175222.325	280388.8816	7/30/2013	-	8/1/2013	631	-	-	-	-	-	-
R-1	48	152	1175060.59	279400.6543	10/16/2013	-	12/27/2013	1008	1/14/2014	79	-	-	-	-
R-10	48	152	1175095.038	279617.9409	9/23/2013	-	9/24/2013	563	-	-	-	-	-	-
R-11	48	-	1175098.953	279642.6326	9/18/2013	-	9/24/2013	591	-	-	-	-	-	-
R-12	48	-	1175102.867	279667.3243	9/12/2013	-	9/17/2013	518	-	-	-	-	-	-
R-13	48	-	1175106.782	279692.0159	9/11/2013	-	9/17/2013	416	-	-	-	-	-	-
R-14	48	-	1175110.696	279716.7076	9/10/2013	-	9/17/2013	253	-	-	-	-	-	-
R-15	48	-	1175114.611	279741.3993	9/9/2013	-	1/23/2014	250	-	-	-	-	-	-
R-16	48	-	1175118.526	279766.0909	9/6/2013	-	1/23/2014	471	-	-	-	-	-	-
R-17	48	-	1175122.44	279790.7826	9/4/2013	-	1/23/2014	471	1/24/2014	45	-	-	-	-
R-18	48	-	1175126.355	279815.4743	8/29/2013	-	9/5/2013	392	1/24/2014	174	-	-	-	-
R-19	48	156	1175130.269	279840.1659	8/29/2013	-	9/5/2013	260	-	-	-	-	-	-
R-2	48	-	1175064.504	279425.3459	10/11/2013	-	12/27/2013	285	-	-	-	-	-	-
R-20	48	156	1175134.184	279864.8576	8/27/2013	-	8/28/2013	320	-	-	-	-	-	-

Pile	Width(In)	Length (ft)	Plan Easting	Plan Northing	Vibe Drive Date	Re-Vibe Drive Date	Impact Drive Date	Impact Blow Count	Second Impact Date	Re-Impact Blow Count	Restrike Date	Restrike Blow Count	Second Restrike Date	Second Restrike Blow Count
R-21	48	156	1175138.099	279889.5493	-	-	8/26/2013	149	11/14/2013	317	-	-	-	-
R-22	48	156	1175142.013	279914.2409	8/21/2013	-	8/26/2013	196	10/23/2013	44	11/14/2014	302	-	-
R-23	48	156	1175145.928	279938.9326	8/19/2013	-	8/20/2013	296	9/12/2013	287	-	-	-	-
R-24	48	156	1175149.842	279963.6243	8/16/2013	-	8/20/2013	501	-	-	-	-	-	-
R-25	48	156	1175153.757	279988.316	8/14/2013	-	8/15/2013	445	-	-	-	-	-	-
R-26	48	158	1175157.672	280013.0077	8/13/2013	-	8/15/2013	278	-	-	-	-	-	-
R-27	48	156	1175160.49	280030.7857	11/11/2013	-	11/13/2013	158	-	-	-	-	-	-
R-3	48	-	1175067.636	279445.0993	10/10/2013	-	12/24/2013	424	-	-	-	-	-	-
R-4	48	-	1175071.551	279469.7909	10/8/2013	-	10/14/2013	301	-	-	-	-	-	-
R-5	48	-	1175075.465	279494.4826	10/7/2013	-	10/9/2013	132	-	-	-	-	-	-
R-6	48	-	1175079.38	279519.1743	10/3/2013	-	10/9/2013	248	-	-	-	-	-	-
R-7	48	-	1175083.294	279543.8659	9/30/2013	-	10/1/2013	153	10/2/2013	673	-	-	-	-
R-8	48	-	1175087.209	279568.5576	9/26/2013	-	10/1/2013	625	1/9/2014	265	-	-	-	-
R-9	48	-	1175091.124	279593.2493	9/25/2013	-	10/1/2013	405	1/9/2014	395	-	-	-	-
S-38	36	150	1175215.194	280292.8131	8/3/2013	-	9/3/2013	86	-	-	-	-	-	-
S-39	36	172	1175219.5	280319.9739	8/2/2013	-	9/3/2013	768	-	-	-	-	-	-
S-43	36	170	1175234.532	280414.7897	7/26/2013	-	8/1/2013	488	-	-	-	-	-	-
S-44	36	150	1175238.838	280441.9505	7/23/2013	-	7/25/2013	213	7/26/2013	643	-	-	-	-
T.1-40	36	170	1175231.707	280345.882	8/1/2013	-	9/3/2013	644	-	-	-	-	-	-
T.1-41	36	170	1175234.918	280366.1291	7/31/2013	-	8/5/2013	534	-	-	-	-	-	-
T.1-42	36	170	1175238.127	280386.3763	7/29/2013	-	8/2/2013	1250	-	-	-	-	-	-
T.5-39	36	148	1175235.303	280317.4686	8/2/2013	-	9/3/2013	162	-	-	-	-	-	-
T.5-43	36	148	1175250.335	280412.2844	7/26/2013	-	8/2/2013	559	-	-	-	-	-	-
T.8-40	36	168	1175247.51	280343.3767	8/1/2013	-	9/3/2013	602	-	-	-	-	-	-
T.8-41	36	168	1175250.72	280363.6238	7/31/2013	-	8/5/2013	482	-	-	-	-	-	-
T.8-42	36	166	1175253.93	280383.8709	7/29/2013	-	8/2/2013	485	-	-	-	-	-	-
T-1	48	150	1175080.343	279397.5225	10/15/2013	-	12/28/2013	478	1/15/2014	104	-	-	-	-
T-10	48	150	1175114.791	279614.8093	9/19/2013	-	9/24/2013	597	-	-	-	-	-	-
T-11	48	-	1175118.706	279639.5009	9/18/2013	-	9/24/2013	800	-	-	-	-	-	-
T-12	48	-	1175122.621	279664.1926	9/12/2013	-	9/17/2013	771	-	-	-	-	-	-
T-13	48	-	1175126.535	279688.8843	9/11/2013	-	9/17/2013	344	-	-	-	-	-	-
T-14	48	-	1175130.45	279713.5759	9/10/2013	-	9/17/2013	215	-	-	-	-	-	-
T-15	48	-	1175134.364	279738.2677	9/9/2013	-	9/17/2013	576	-	-	-	-	-	-
T-16	48	-	1175138.279	279762.9593	9/6/2013	-	12/4/2013	862	-	-	-	-	-	-
T-17	48	-	1175142.194	279787.6509	9/4/2013	-	-	-	-	-	-	-	-	-
T-18	48	-	1175146.108	279812.3427	8/29/2013	-	9/5/2013	394	-	-	-	-	-	-
T-19	48	154	1175150.023	279837.0343	8/27/2013	-	8/28/2013	457	12/4/2013	118	-	-	-	-
T-2	48	-	1175084.258	279422.2143	10/11/2013	-	12/28/2013	510	1/15/2014	56	-	-	-	-
T-20	48	152	1175153.937	279861.7259	8/22/2013	-	8/28/2013	232	12/4/2013	286	-	-	-	-
T-21	48	152	1175157.852	279886.4177	8/22/2013	-	8/26/2013	103	12/4/2013	324	-	-	-	-
T-22	48	152	1175161.767	279911.1093	8/21/2013	-	8/26/2013	84	9/12/2013	169	-	-	-	-

Pile	Width(In)	Length (ft)	Plan Easting	Plan Northing	Vibe Drive Date	Re-Vibe Drive Date	Impact Drive Date	Impact Blow Count	Second Impact Date	Re-Impact Blow Count	Restrike Date	Restrike Blow Count	Second Restrike Date	Second Restrike Blow Count
T-23	48	154	1175165.681	279935.8009	8/19/2013	-	8/20/2013	335	-	-	-	-	-	-
T23-B	36	124	280325.524	1175395.208	8/12/2013	-	-	-	-	-	-	-	-	-
T23-C	36	124	280340.339	1175397.557	8/12/2013	-	-	-	-	-	-	-	-	-
T23-D	36	124	280355.154	1175399.906	8/12/2013	-	-	-	-	-	-	-	-	-
T-24	48	154	1175169.596	279960.4927	8/16/2013	-	8/20/2013	232	-	-	-	-	-	-
T24-B	36	129	280329.648	1175369.199	8/12/2013	8/13/2013	-	-	-	-	-	-	-	-
T24-C	36	129	280344.463	1175371.549	8/13/2013	-	-	-	-	-	-	-	-	-
T24-D	36	129	280359.278	1175373.897	8/13/2013	-	-	-	-	-	-	-	-	-
T-25	48	154	1175173.51	279985.1843	8/14/2013	-	8/15/2013	295	-	-	-	-	-	-
T25-B	36	129	280333.771	1175343.191	8/14/2013	-	-	-	-	-	-	-	-	-
T25-C	36	129	280348.586	1175345.540	8/15/2013	-	-	-	-	-	-	-	-	-
T25-D	36	129	280363.401	1175347.889	8/15/2013	-	-	-	-	-	-	-	-	-
T-26	48	154	1175177.425	280009.8759	8/13/2013	-	8/15/2013	263	-	-	-	-	-	-
T26-B	36	135	280337.895	1175317.183	8/16/2013	-	-	-	-	-	-	-	-	-
T26-C	36	135	280352.710	1175319.532	8/15/2013	-	-	-	-	-	-	-	-	-
T26-D	36	135	280367.525	1175321.879	8/15/2013	-	-	-	-	-	-	-	-	-
T27-B	36	139	280341.763	1175292.785	8/20/2013	-	-	-	-	-	-	-	-	-
T27-C	36	139	280356.578	1175295.134	8/20/2013	-	-	-	-	-	-	-	-	-
T26-D	36	139	280371.393	1175297.483	8/20/2013	-	-	-	-	-	-	-	-	-
T-3	48	-	1175087.389	279441.9676	10/10/2013	-	12/28/2013	423	-	-	-	-	-	-
T-4	48	-	1175091.304	279466.6593	10/8/2013	-	10/14/2013	77	12/10/2013	662	-	-	-	-
T-5	48	-	1175095.219	279491.3509	10/7/2013	-	10/9/2013	336	-	-	-	-	-	-
T-6	48	-	1175099.133	279516.0426	10/3/2013	-	10/9/2013	319	-	-	-	-	-	-
T-7	48	-	1175103.048	279540.7343	9/30/2013	-	10/1/2013	702	-	-	-	-	-	-
T-8	48	-	1175106.962	279565.4259	9/26/2013	-	10/1/2013	593	12/4/2013	83	-	-	-	-
T-9	48	-	1175110.877	279590.1176	9/25/2013	-	10/1/2013	600	12/4/2013	156	-	-	-	-
V.1-39	36	148	1175246.661	280315.6679	8/2/2013	-	8/30/2013	96	-	-	-	-	-	-
V.1-43	36	146	1175261.693	280410.4837	7/26/2013	-	8/2/2013	296	-	-	-	-	-	-
V.1W-1	36	164	1175256.382	280329.061	10/11/2013	-	10/12/2013	245	-	-	-	-	-	-
V.1W-2	36	169.2	1175254.304	280331.9216	10/9/2013	-	10/10/2013	437	-	-	-	-	-	-
V.1W-3	36	164.7	1175257.165	280333.9993	10/15/2013	-	10/16/2013	631	-	-	-	-	-	-
V.1W-4	36	158.8	1175259.243	280331.1386	10/14/2013	-	10/15/2013	456	-	-	-	-	-	-
V.1W-5	36	162.9	1175266.013	280389.803	9/27/2013	-	9/30/2013	1107	-	-	-	-	-	-
V.1W-6	36	169	1175263.935	280392.6637	9/9/2013	-	9/11/2013	345	9/13/2013	19	-	-	-	-
V.1W-7	36	163.85	1175266.796	280394.7414	9/25/2013	-	9/26/2013	464	-	-	-	-	-	-
V.1W-8	36	158.15	1175268.873	280391.8807	9/19/2013	-	9/23/2013	541	-	-	-	-	-	-
V-1	48	146	1175100.097	279394.3909	10/15/2013	-	12/28/2013	796	-	-	-	-	-	-
V-10	48	148	1175134.545	279611.6776	9/19/2013	-	9/24/2013	578	11/21/2013	291	-	-	-	-
V-11	48	-	1175138.459	279636.3692	9/18/2013	-	9/24/2013	901	11/21/2013	121	-	-	-	-
V-12	48	-	1175142.374	279661.0609	9/12/2013	-	9/16/2013	600	11/21/2013	321	-	-	-	-
V-13	48	-	1175146.289	279685.7526	9/11/2013	-	9/16/2013	734	10/20/2013	124	-	-	-	-

Pile	Width(In)	Length (ft)	Plan Easting	Plan Northing	Vibe Drive Date	Re-Vibe Drive Date	Impact Drive Date	Impact Blow Count	Second Impact Date	Re-Impact Blow Count	Restrike Date	Restrike Blow Count	Second Restrike Date	Second Restrike Blow Count
V-14	48	-	1175150.203	279710.4443	9/10/2013	-	9/16/2013	470	10/20/2013	216	-	-	-	-
V-15	48	-	1175154.118	279735.1359	9/9/2013	-	9/16/2013	465	10/20/2013	258	-	-	-	-
V-16	48	-	1175158.032	279759.8276	9/6/2013	-	10/11/2013	531	11/5/2013	379	-	-	-	-
V-17	48	-	1175161.947	279784.5193	9/4/2013	-	9/5/2013	1350	11/4/2013	191	-	-	-	-
V-18	48	-	1175165.862	279809.2109	8/29/2013	-	9/5/2013	498	10/11/2013	171	-	-	-	-
V-19	48	150	1175169.776	279833.9026	8/27/2013	-	8/28/2013	422	11/4/2013	593	-	-	-	-
V-2	48	-	1175104.011	279419.0825	10/11/2013	-	12/28/2013	605	1/14/2014	150	-	-	-	-
V-20	48	150	1175173.691	279858.5943	8/22/2013	-	8/28/2013	348	11/4/2013	603	-	-	-	-
V-21	48	150	1175177.605	279883.2859	8/22/2013	-	8/26/2013	300	9/12/2013	306	-	-	-	-
V-22	48	150	1175181.52	279907.9776	8/21/2013	-	8/26/2013	304	8/28/2013	411	-	-	-	-
V-23	48	150	1175185.434	279932.6693	8/19/2013	-	8/20/2013	889	9/12/2013	47	10/23/2013	128	2/14/2014	1278
V-24	48	152	1175189.349	279957.3609	8/16/2013	-	8/20/2013	452	9/12/2013	76	-	-	-	-
V-25	48	152	1175193.264	279982.0526	8/14/2013	-	8/15/2013	212	-	-	-	-	-	-
V-26	48	152	1175197.178	280006.7443	8/13/2013	-	8/15/2013	244	-	-	-	-	-	-
V-3	48	-	1175107.143	279438.8359	10/10/2013	-	12/28/2013	599	1/15/2014	94	-	-	-	-
V-4	48	-	1175111.057	279463.5276	10/8/2013	-	10/14/2013	571	12/10/2013	121	-	-	-	-
V-5	48	-	1175114.972	279488.2192	10/7/2013	-	10/9/2013	381	12/10/2013	121	-	-	-	-
V-6	48	-	1175118.886	279512.9109	10/3/2013	-	10/9/2013	311	12/10/2013	150	-	-	-	-
V-7	48	-	1175122.801	279537.6026	9/30/2013	-	10/1/2013	479	12/9/2013	152	-	-	-	-
V-8	48	-	1175126.716	279562.2942	9/26/2013	-	10/1/2013	621	2/14/2014	266	-	-	-	-
V-9	48	-	1175130.63	279586.9859	9/25/2013	-	10/1/2013	579	11/21/2013	131	-	-	-	-
VX-1	36	-	1175118.585	279447.1467	2/6/2014	-	2/6/2014	26	2/7/2014	773	-	-	-	-
VX-10	36	-	1175124.337	279499.3906	1/31/2014	-	2/1/2014	275	-	-	-	-	-	-
VX-11	36	-	1175127.197	279501.4682	2/4/2014	-	2/4/2014	506	-	-	-	-	-	-
VX-12	36	-	1175129.275	279498.6077	1/30/2014	-	1/31/2014	631	-	-	-	-	-	-
VX-13	36	-	1175134.244	279545.9134	1/22/2014	-	1/22/2014	615	-	-	-	-	-	-
VX-14	36	-	1175132.166	279548.7739	1/21/2014	-	1/21/2014	226	-	-	-	-	-	-
VX-15	36	-	1175135.027	279550.8517	1/22/2014	-	1/23/2014	552	-	-	-	-	-	-
VX-16	36	-	1175137.104	279547.9911	1/20/2014	-	1/20/2014	398	-	-	-	-	-	-
VX-17	36	-	1175142.073	279595.2966	1/16/2014	-	1/16/2014	758	-	-	-	-	-	-
VX-18	36	-	1175139.995	279598.1573	1/15/2014	-	1/15/2014	407	-	-	-	-	-	-
VX-19	36	-	1175142.856	279600.2349	1/17/2014	-	1/17/2014	503	-	-	-	-	-	-
VX-2	36	-	1175116.508	279450.0072	2/5/2014	-	-	-	-	-	-	-	-	-
VX-20	36	-	1175144.934	279597.3743	1/14/2014	-	1/15/2014	694	-	-	-	-	-	-
VX-21	36	-	1175149.902	279644.6801	1/14/2014	-	1/14/2014	1032	-	-	-	-	-	-
VX-22	36	-	1175147.824	279647.5406	1/18/2014	-	1/18/2014	513	-	-	-	-	-	-
VX-23	36	-	1175150.685	279649.6183	1/13/2014	-	1/13/2014	431	-	-	-	-	-	-
VX-24	36	-	1175152.763	279646.7577	1/17/2014	-	1/18/2014	742	-	-	-	-	-	-
VX-25	36	-	1175157.731	279694.0634	1/9/2014	-	1/10/2014	511	-	-	-	-	-	-
VX-26	36	-	1175155.654	279696.9239	1/7/2014	-	1/7/2014	711	-	-	-	-	-	-
VX-27	36	-	1175158.514	279699.0016	1/10/2014	-	1/12/2014	519	-	-	-	-	-	-

Pile	Width(In)	Length (ft)	Plan Easting	Plan Northing	Vibe Drive Date	Re-Vibe Drive Date	Impact Drive Date	Impact Blow Count	Second Impact Date	Re-Impact Blow Count	Restrike Date	Restrike Blow Count	Second Restrike Date	Second Restrike Blow Count
VX-28	36	-	1175160.592	279696.141	1/8/2014	-	1/9/2014	278	-	-	-	-	-	-
VX-29	36	-	1175159.255	279719.6404	1/25/2014	-	1/25/2014	415	-	-	-	-	-	-
VX-3	36	-	1175119.368	279452.0849	2/7/2014	-	2/7/2014	448	-	-	-	-	-	-
VX-30	36	-	1175159.881	279723.591	1/24/2014	-	1/24/2014	543	-	-	-	-	-	-
VX-31	36	-	1175164.193	279718.8574	1/25/2014	-	1/27/2014	603	-	-	-	-	-	-
VX-32	36	-	1175164.82	279722.8081	1/27/2014	-	1/29/2014	592	-	-	-	-	-	-
VX-33	36	-	1175165.56	279743.4467	1/2/2014	-	-	-	-	-	-	-	-	-
VX-34	36	-	1175163.483	279746.3073	1/4/2014	-	1/6/2014	417	-	-	-	-	-	-
VX-35	36	-	1175166.343	279748.3849	12/31/2013	-	1/2/2014	458	-	-	-	-	-	-
VX-36	36	-	1175168.421	279745.5244	1/3/2014	-	1/4/2014	539	-	-	-	-	-	-
VX-37	36	-	1175173.39	279792.8301	12/17/2013	-	12/17/2013	779	-	-	-	-	-	-
VX-38	36	-	1175171.312	279795.6906	12/19/2013	-	12/21/2013	472	-	-	-	-	-	-
VX-39	36	-	1175174.172	279797.7684	12/18/2013	-	12/19/2013	293	-	-	-	-	-	-
VX-4	36	-	1175121.446	279449.2243	2/5/2014	-	2/5/2014	920	-	-	-	-	-	-
VX-40	36	-	1175176.25	279794.9077	12/21/2013	-	12/23/2013	324	-	-	-	-	-	-
VX-41	36	188	1175181.219	279842.2134	12/12/2013	-	12/14/2013	292	-	-	-	-	-	-
VX-42	36	183.5	1175179.141	279845.074	-	-	12/13/2013	562	-	-	-	-	-	-
VX-43	36	179.5	1175182.002	279847.1518	12/11/2013	-	-	-	-	-	-	-	-	-
VX-44	36	183.5	1175184.079	279844.2911	12/10/2013	-	12/10/2013	734	-	-	-	-	-	-
VX-45	36	188	1175189.048	279891.5968	11/16/2013	-	11/16/2013	345	-	-	-	-	-	-
VX-46	36	183.5	1175186.97	279894.4573	11/14/2013	-	11/15/2013	240	-	-	-	-	-	-
VX-47	36	179.5	1175189.831	279896.5351	11/18/2013	-	11/19/2013	321	-	-	-	-	-	-
VX-48	36	183.5	1175191.909	279893.6745	11/13/2013	-	11/13/2013	724	-	-	-	-	-	-
VX-49	36	188	1175190.572	279917.1737	12/3/2013	-	11/23/2013	393	-	-	-	-	-	-
VX-5	36	-	1175120.109	279472.7236	2/13/2014	-	2/13/2014	629	-	-	-	-	-	-
VX-50	36	188	1175191.198	279921.1243	11/26/2013	-	-	-	-	-	-	-	-	-
VX-51	36	179.5	1175195.51	279916.3907	12/7/2013	-	12/7/2013	553	-	-	-	-	-	-
VX-52	36	179.5	1175196.136	279920.3414	12/4/2013	-	12/5/2013	564	-	-	-	-	-	-
VX-53	36	188	1175196.877	279940.98	10/31/2013	-	11/1/2013	548	-	-	-	-	-	-
VX-54	36	186	1175194.799	279943.8407	11/5/2013	-	-	-	-	-	-	-	-	-
VX-55	36	183.5	1175197.66	279945.9183	11/5/2013	-	11/6/2013	858	-	-	-	-	-	-
VX-56	36	179.5	1175199.738	279943.0577	11/8/2013	-	-	-	-	-	-	-	-	-
VX-57	36	188	1175198.401	279966.557	11/25/2013	-	-	-	-	-	-	-	-	-
VX-58	36	188	1175199.027	279970.5077	11/20/2013	-	-	-	-	-	-	-	-	-
VX-59	36	181.5	1175203.339	279965.7741	11/23/2013	-	-	-	-	-	-	-	-	-
VX-6	36	-	1175120.735	279476.6743	2/13/2014	-	2/13/2014	523	-	-	-	-	-	-
VX-60	36	181.5	1175203.965	279969.7247	11/21/2013	-	11/22/2013	475	-	-	-	-	-	-
VX-61	36	190	1175204.706	279990.3634	10/18/2013	-	10/23/2013	49	-	-	-	-	-	-
VX-63	36	181.5	1175205.489	279995.3018	10/18/2013	-	10/19/2013	486	-	-	-	-	-	-
VX-64	36	183.5	1175207.567	279992.4411	10/21/2013	-	10/21/2013	514	-	-	-	-	-	-
VX-7	36	-	1175125.047	279471.9407	2/8/2014	-	2/8/2014	880	-	-	-	-	-	-

Pile	Width(In)	Length (ft)	Plan Easting	Plan Northing	Vibe Drive Date	Re-Vibe Drive Date	Impact Drive Date	Impact Blow Count	Second Impact Date	Re-Impact Blow Count	Restrike Date	Restrike Blow Count	Second Restrike Date	Second Restrike Blow Count
VX-8	36	-	1175125.674	279475.8913	2/10/2014	-	2/10/2014	695	-	-	-	-	-	-
VX-9	36	-	1175126.414	279496.53	2/1/2014	-	-	-	-	-	-	-	-	-
W-40	36	144	1175263.313	280340.8713	8/1/2013	-	8/30/2013	142	-	-	-	-	-	-
W-41	36	164	1175266.523	280361.1184	7/31/2013	-	8/5/2013	376	-	-	-	-	-	-
W-42	36	142	1175269.733	280381.3665	7/29/2013	-	8/2/2013	304	-	-	-	-	-	-
X.8-40	36	142	1175278.128	280338.5226	8/1/2013	-	8/30/2013	166	-	-	-	-	-	-
X.8-41	36	142	1175281.338	280358.7697	7/30/2013	-	-	-	-	-	-	-	-	-
X.8-42	36	142	1175284.548	280379.0168	7/29/2013	-	11/19/2013	181	-	-	-	-	-	-
X-1	48	144	1175119.85	279391.2592	10/15/2013	-	12/28/2013	716	-	-	-	-	-	-
X-10	48	146	1175154.298	279608.546	9/19/2013	-	9/24/2013	1087	11/21/2013	121	-	-	-	-
X-11	48	-	1175158.213	279633.2376	9/18/2013	-	9/24/2013	836	11/21/2013	121	-	-	-	-
X-12	48	-	1175162.127	279657.9292	9/12/2013	-	9/17/2013	573	11/20/2013	122	-	-	-	-
X-13	48	-	1175166.042	279682.621	9/11/2013	-	9/16/2013	508	11/20/2013	99	2/14/2014	222	-	-
X-14	48	-	1175169.957	279707.3126	9/10/2013	-	9/16/2013	526	11/20/2013	182	-	-	-	-
X-15	48	-	1175173.871	279732.0042	9/9/2013	-	9/16/2013	814	11/20/2013	131	-	-	-	-
X-16	48	-	1175177.786	279756.696	9/6/2013	-	10/11/2013	491	11/5/2013	336	-	-	-	-
X-17	48	-	1175181.7	279781.3876	9/4/2013	-	9/5/2013	325	11/4/2013	273	-	-	-	-
X-18	48	-	1175185.615	279806.0792	8/29/2013	-	9/5/2013	386	11/4/2013	266	-	-	-	-
X-19	48	148	1175189.529	279830.771	8/27/2013	-	8/28/2013	426	11/4/2013	521	-	-	-	-
X-2	48	-	1175123.764	279415.9509	10/10/2013	-	12/28/2013	820	-	-	-	-	-	-
X-20	48	148	1175193.444	279855.4626	8/22/2013	-	8/28/2013	482	11/4/2013	165	-	-	-	-
X-21	48	148	1175197.359	279880.1543	8/22/2013	-	8/26/2013	502	9/12/2013	291	-	-	-	-
X-22	48	146	1175201.273	279904.846	8/21/2013	-	8/26/2013	137	9/12/2013	162	-	-	-	-
X-23	48	148	1175205.188	279929.5376	8/19/2013	-	8/20/2013	418	10/11/2013	253	-	-	-	-
X-24	48	148	1175209.102	279954.2293	8/16/2013	-	8/20/2013	262	10/12/2013	273	-	-	-	-
X-25	48	150	1175213.017	279978.921	8/14/2013	-	8/15/2013	266	-	-	-	-	-	-
X-26	48	150	1175216.932	280003.6126	8/13/2013	-	8/15/2013	240	-	-	-	-	-	-
X-3	48	-	1175126.896	279435.7042	10/10/2013	-	12/28/2013	708	-	-	-	-	-	-
X-4	48	-	1175130.811	279460.3959	10/8/2013	-	10/14/2013	610	12/10/2013	224	-	-	-	-
X-5	48	-	1175134.725	279485.0876	10/7/2013	-	10/9/2013	418	12/10/2013	121	-	-	-	-
X-6	48	-	1175138.64	279509.7792	10/3/2013	-	10/9/2013	367	12/9/2013	211	-	-	-	-
X-7	48	-	1175142.554	279534.471	9/30/2013	-	10/1/2013	587	12/9/2013	127	-	-	-	-
X-8	48	-	1175146.469	279559.1626	9/26/2013	-	10/1/2013	563	12/4/2013	211	-	-	-	-
X-9	48	-	1175150.384	279583.8542	9/25/2013	-	10/1/2013	897	11/21/2013	121	-	-	-	-

APPENDIX E

Bubble Curtain and Bubble Pile Specifications

NO. TO SHIP	SHIP MARK	ASSY MARK	NO. PC'S	DESCRIPTION	LENGTH FT	LENGTH IN	MATERIAL	REMARKS
2 9	1A			BUBBLER RING				
		a1	18	PIPE ø3 SCH 40	7	6 9/16	T6061 Alu.	ROLL
		b1	36	HSS 2 1/2 x 2 1/2 x 1/4	1	0	T6061 Alu.	
		c1	36	PL 3/4 x 10 1/2		10 3/4	T6061 Alu.	
		d1	18	1-1/2" SCH. 80 PIPE NIPPLE		4	T6061 Alu.	
		e1	54	PL 3/8"x 4-3/8"		9-1/2	T6061 Alu.	
		f1	36	PL 1/4"x 3-1/2" Dia.		3-1/2	T6061 Alu.	
		g1	18	1/2" NPT PIPE COUPLER			T6061	
		h1	18	1/2" NPT PIPE PLUG			SS 18-8	
				FIELD HARDWARE				
			36	HEX BOLT ø3/8"-UNC		3 1/4	SS 18-8	
			36	NYLOCK HEX NUT ø3/8"-UNC			SS 18-8	
			36	FLAT WASHER ø3/8"			SS 18-8	
			9	HEX BOLT 1/2"-13UNC.		2	SS 18-8	
			9	NYLOCK HEX NUT 1/2"-13UNC.			SS 18-8	
			9	1/2" Dia. x BALL LOCK PIN & LANYARD		1-1/2	SS 18-8	M CARR #93750A7

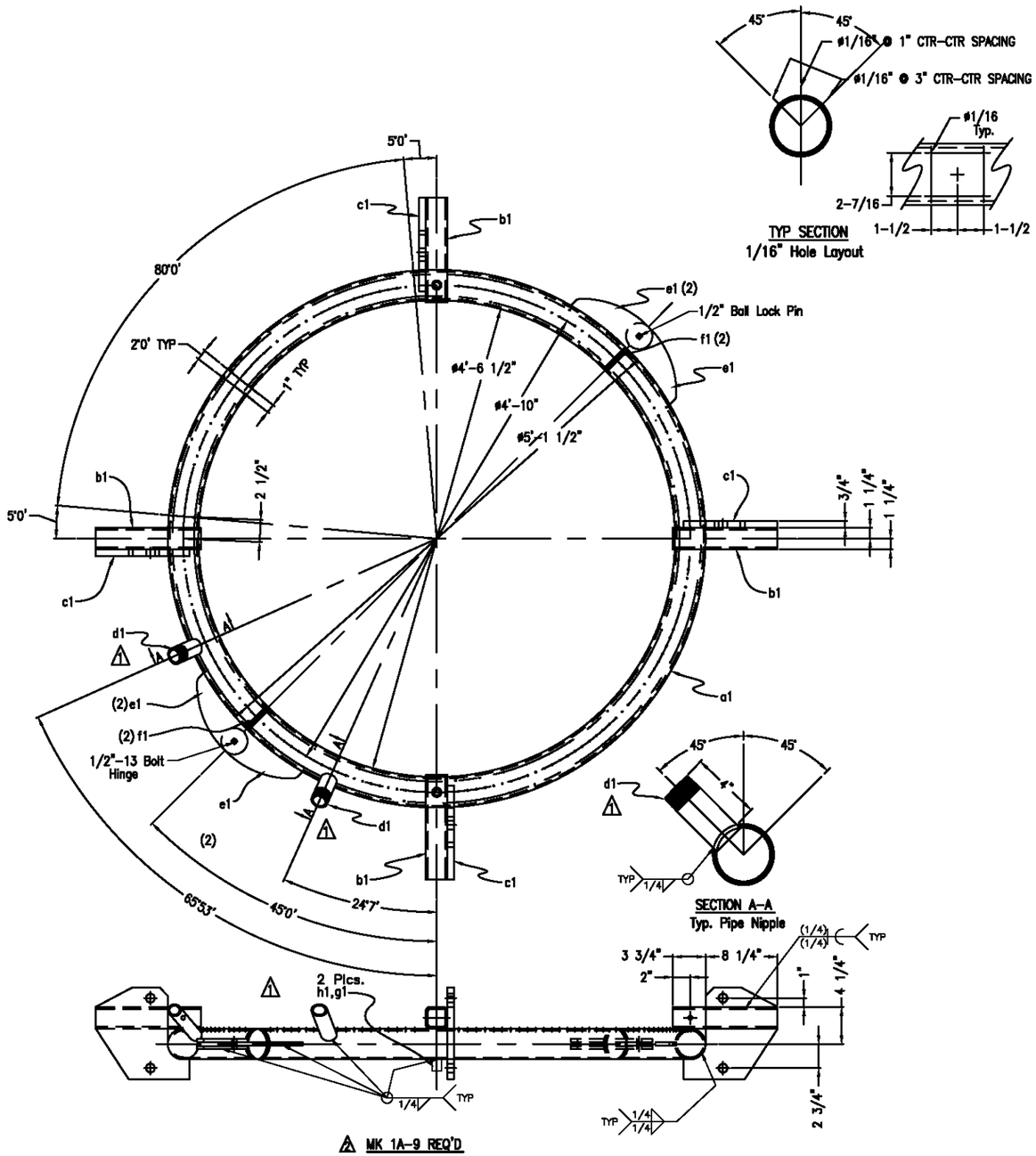

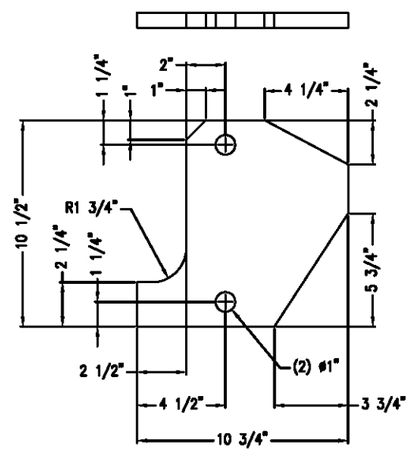

c1-PL 3/4
T6061

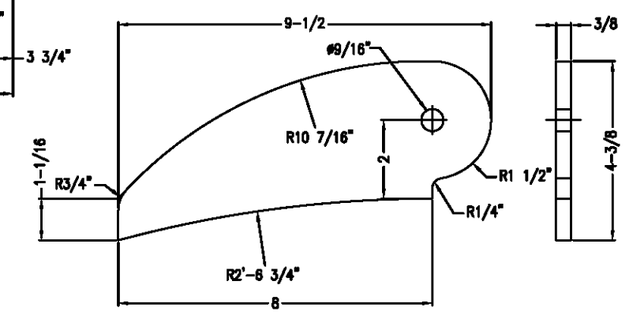

e1-PL 3/8"x 4-3/8"x 9-1/2"
T6061

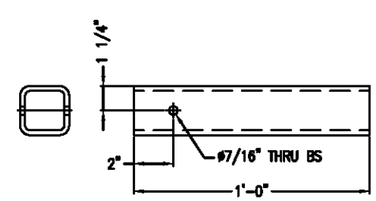

b1-TS 2-1/2"x 2-1/2"x 1/4"
T6061

No.	REVISIONS	BY	DATE
2	CHANGED RING QTY. FROM 6 TO 9	JAJ	8/10/12
1	CORRECTIONS, HOLES, PIPE NIPPLE	JAJ	8/10/12

CERT. WELDERS _____ INSPECTION _____

OPEN HOLES _____ EXCEPT AS NOTED _____

PAINT NONE

CONTRACT NO. | BID ITEM

JESSE ENGINEERING CO.

8020 7TH STREET EAST TACOMA, WASHINGTON 98404 (206) 922-7052

JOB REACTION FRAME AND BUBBLER RINGS

TITLE BUBBLER RING DETAILS

FOR EHW CONSTRUCTORS

	NAME	DATE
DRAWN	BLR	6/13/11
CHK'D	BLR	6/15/11
APP'D		
SCALE		

JOB NO. 143518

DWG NO. D01

REVISION 2

NO. TO SHIP	SHIP MARK	ASSY MARK	NO. PC'S	DESCRIPTION	LENGTH FT	LENGTH IN	MATERIAL	REMARKS
44	2A			RUB SHOES				
		a2	44	PL 1/2 x 10	1	4	T6061 Alu.	ROLL
		b2	44	UHMW 3/4 x 10	1	3 5/8	UHMW	
		c2	44	SQ 2 x 2	2	2	T6061 Alu.	
			264	HEX SKT FLAT CNSK HD MS #3/8-UNC		1 1/2	SS 18-8	
			264	NYLOCK HEX NUT #3/8"-UNC			SS 18-8	
			264	FLAT WASHER #3/8"			SS 18-8	

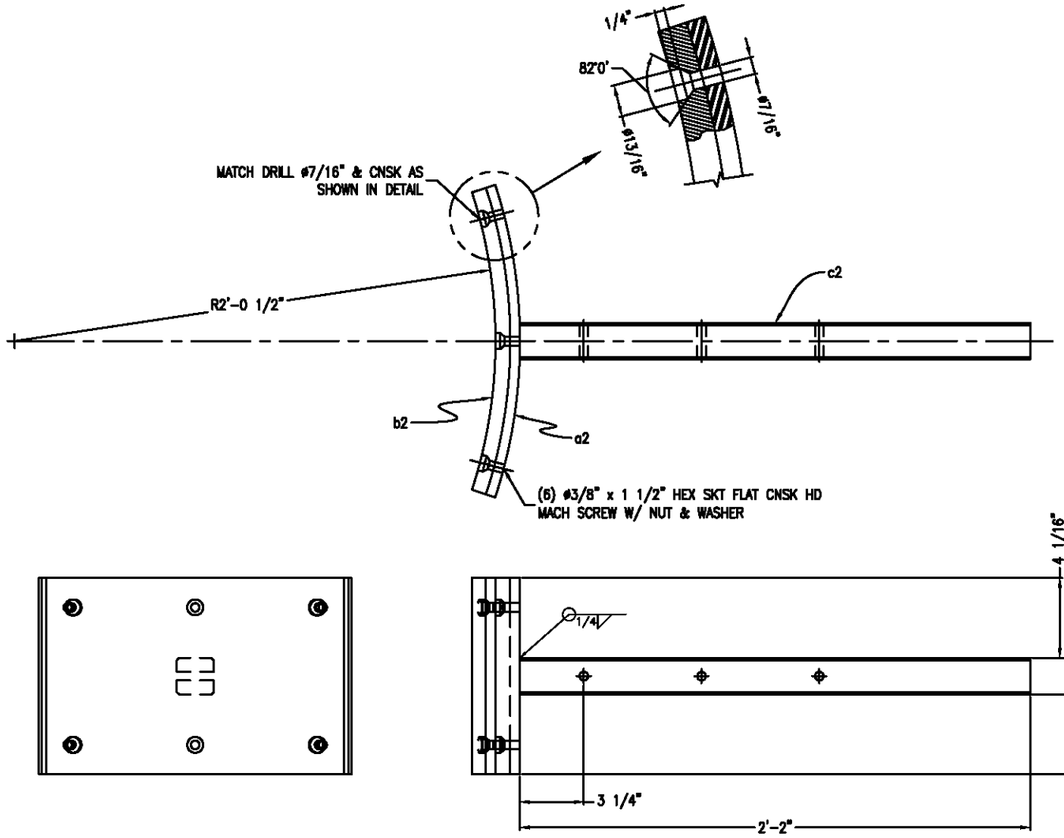

A MK 2A ~ 44 REQ'D

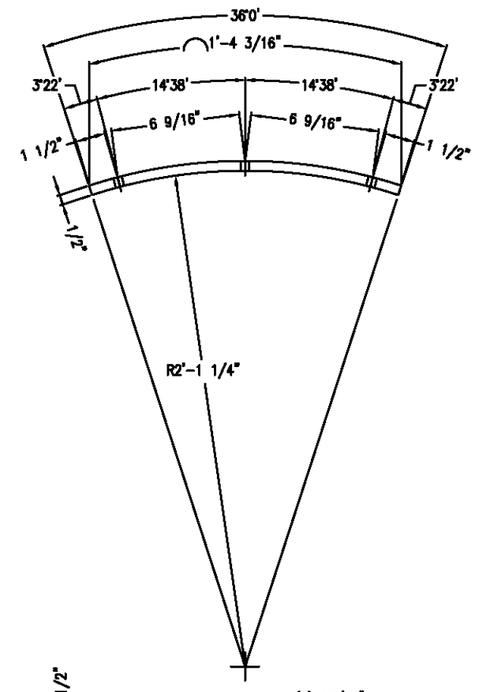

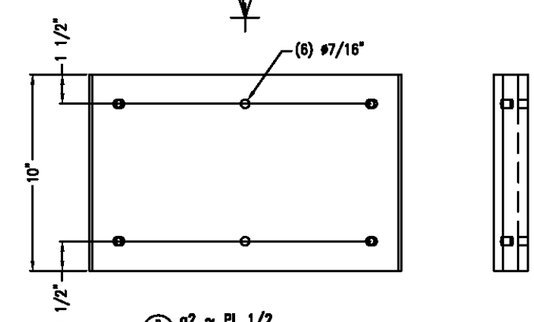

D a2 ~ PL 1/2

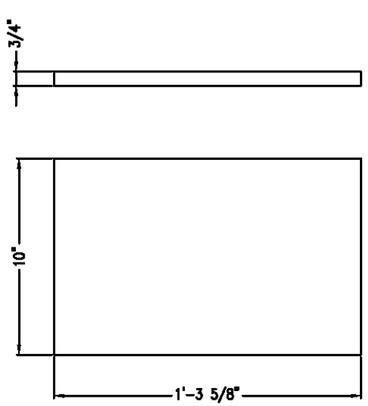

B b2 ~ UHMW 3/4 x 10

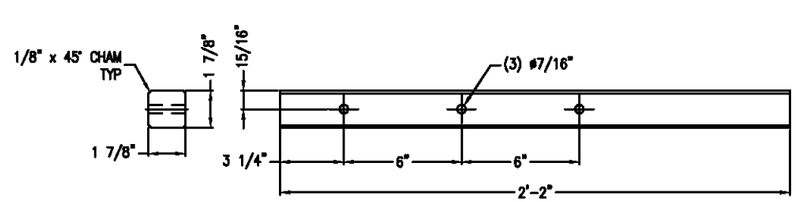

C c2 ~ SQ 2 x 2

No.	REVISIONS	BY	DATE
1	CHANGED QTY. FROM 32 TO 44	JAJ	8/15/12

CERT. WELDERS _____ INSPECTION _____

OPEN HOLES _____ EXCEPT AS NOTED

PAINT NONE

CONTRACT NO. | BID ITEM

JESSE ENGINEERING CO.
1828 7TH STREET EAST TACOMA, WASHINGTON 98404 (206) 922-7452

JOB REACTION FRAME AND BUBBLER RINGS

TITLE BUBBLER RING DETAILS

FOR EHW CONSTRUCTORS

	NAME	DATE
DRAWN	BLR	6/12/11
CHK'D	BLR	6/15/11
APP'D		
SCALE		

JOB NO. 143518

DWG NO. D02

REVISION 1

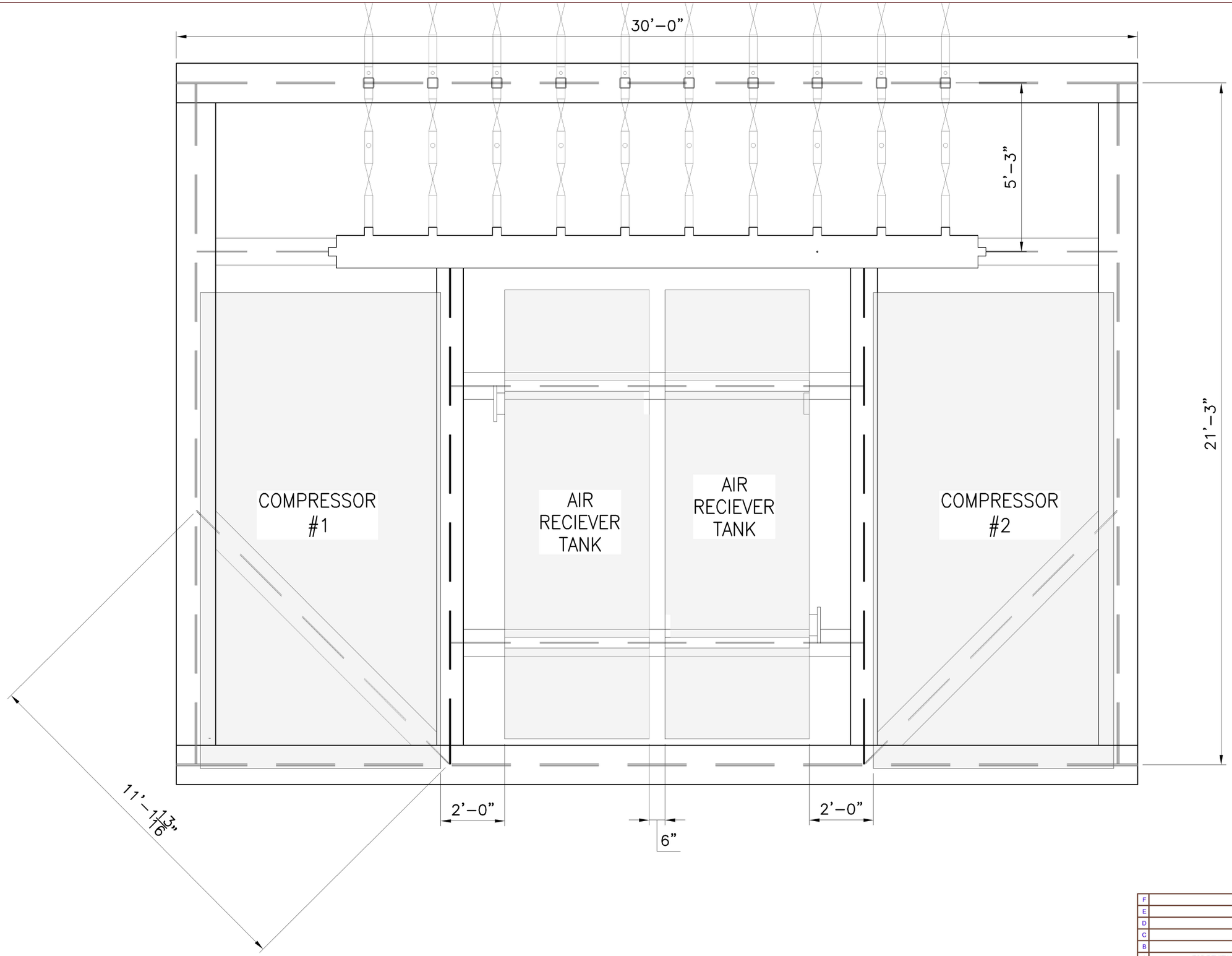

BUBBLE RING COMPRESSOR FRAME
EHW #2
NAVAL BASE KITSAP-BANGOR
BANGOR, WA

EHW Constructors
a joint venture
Working the Navy Way

Regional Office:	
Made By: FNH	Date: 3/12/2013
Checked By:	Date:
In Charge Of:	
Job No.	Sheet No.
N44255-12-C-3008	BF-100

F	
E	
D	
C	
B	
A	FOR REVIEW
REVISIONS	

Scale: NTS

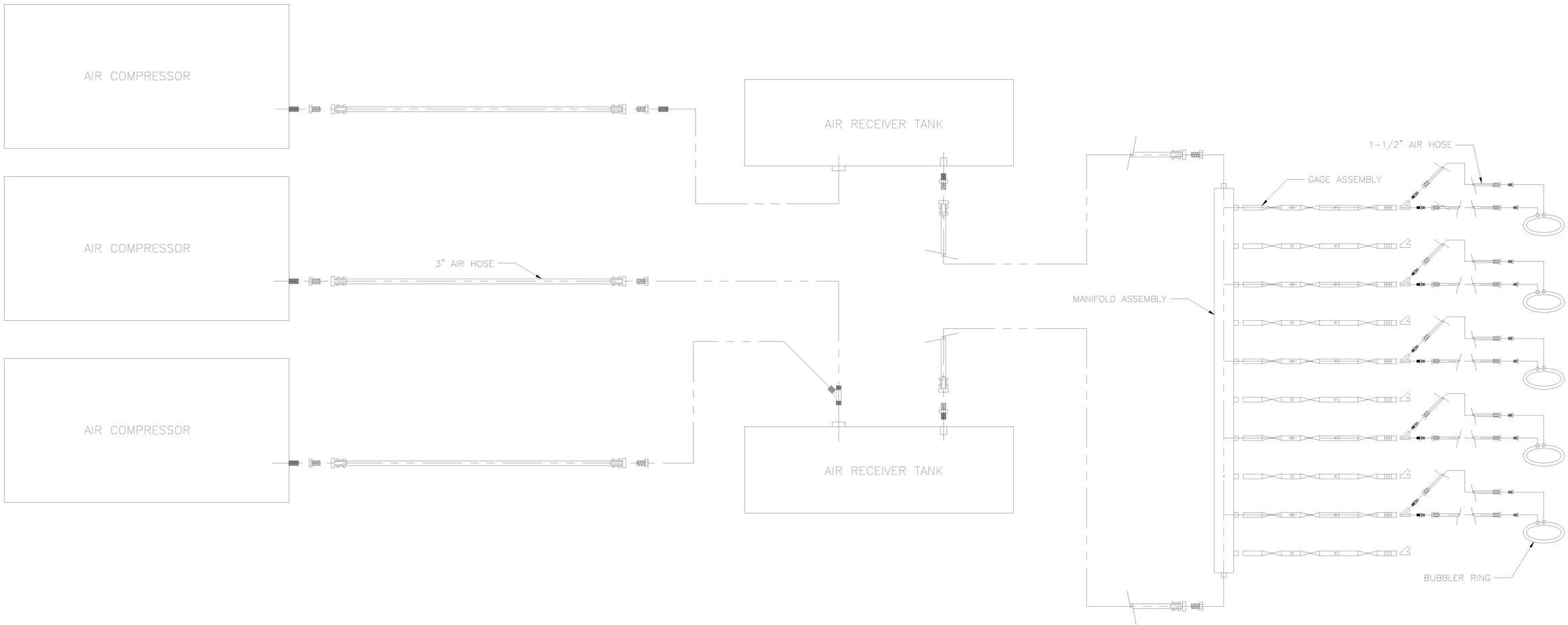

BUBBLE RING PARTS LAYOUT
EHW #2
NAVAL BASE KISTAP-BANGOR
BANGOR TRIDENT BASE, WA

EHW Constructors
a joint venture
Working the Navy Way

Regional Office:
Made By: FNH Date: 3/12/2013
Checked By: Date:
In Charge Of:

Job No. N44255-12-C-3008
Sheet No. 1 OF 1

F	
E	
D	
C	
B	
A	FOR REVIEW

REVISIONS

Scale: NTS

BUBBLE CURTAIN SYSTEM

Pressure Chart

Ring	Depth (feet)	Gauge Pressure (psi)
1	5	50
2	15	54
3	25	58
4	35	63
5	45	68
6	55	72
7	65	76
8	75	81
9	85	86
10	95	91

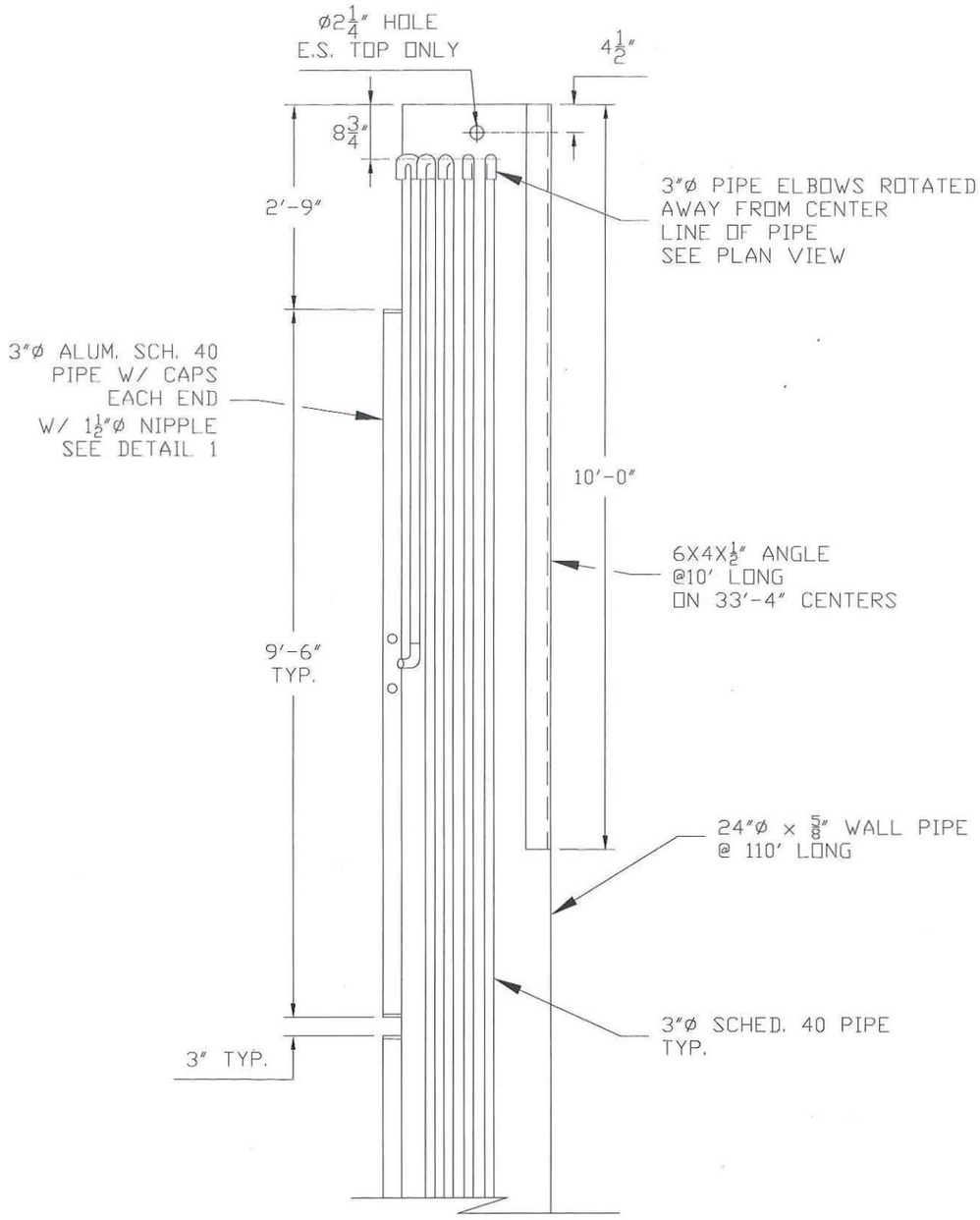

SECTION VIEW

SCALE: ½" = 1'

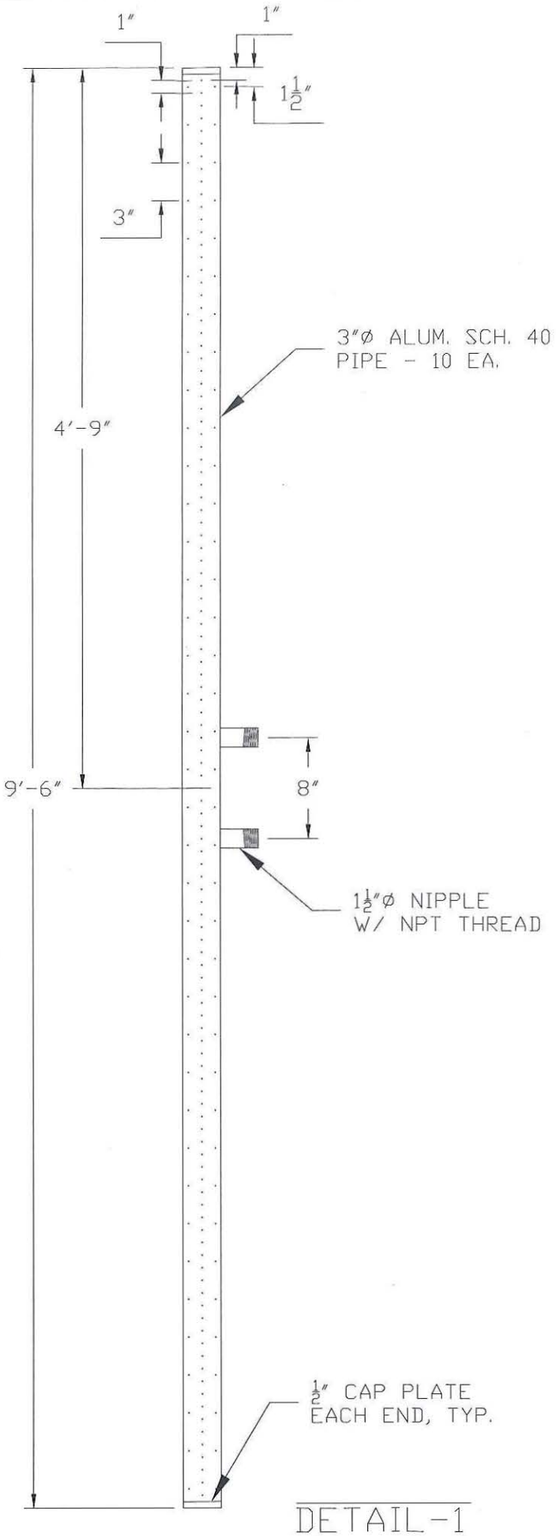

DETAIL-1

SCALE: 1" = 1'

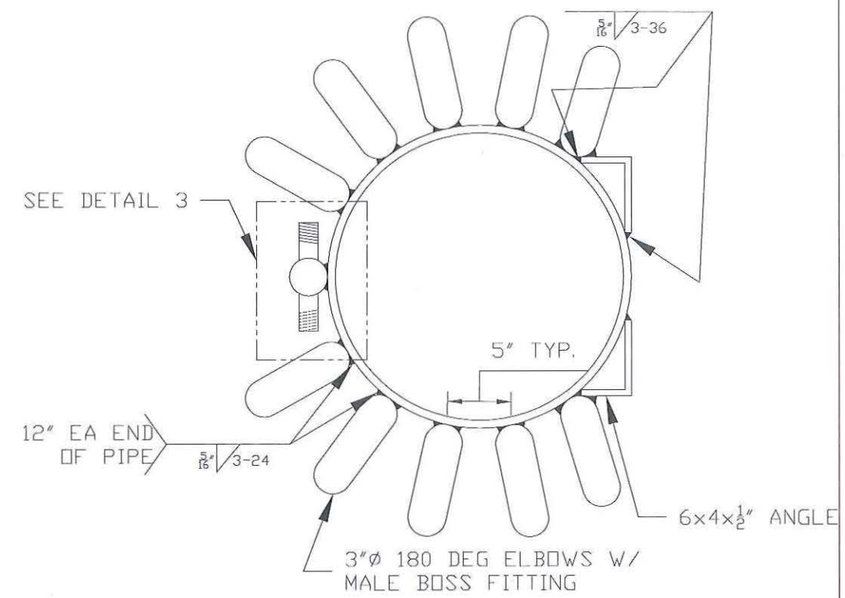

PLAN VIEW

SCALE: 1" = 1'

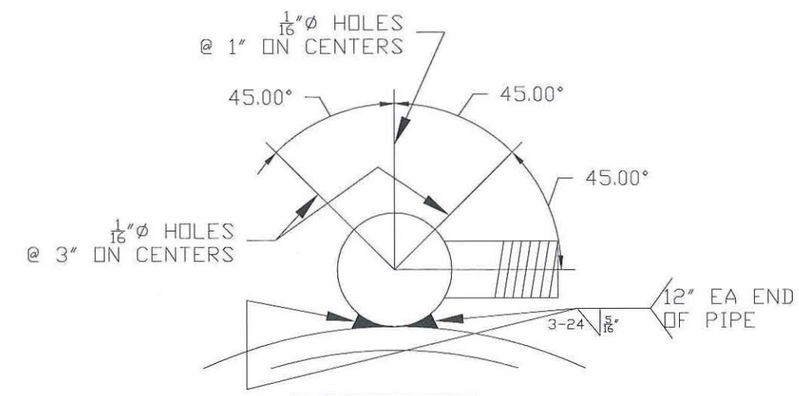

DETAIL-3

SCALE: 3" = 1'

NOTE:

1. TOP (5) 3" PIPES SHALL HAVE NIPPLE ON RIGHT SIDE
2. BOTTOM (5) 3" PIPES SHALL HAVE NIPPLE ON LEFT SIDE
3. 2¼" HOLE AT TOP OF 24" PILE SHALL BE BURNED AT CENTER OF BOTH SIDES OF PIPE

Scale: VARIES

F	
E	
D	
C	
B	
A	FOR REVIEW
	REVISIONS

BUBBLER PIPE
EHW CONSTRUCTORS
EHW #2 NAVAL BASE KITSAP-BANGOR
BANGOR TRIDENT BASE, WA

EHW Constructors a joint venture
Working the Navy Way

Regional Office:
Made By: FNH Date: 10-11-2013
Checked By: Date:
In Charge Of:

Job No. N44255-12-C-3008
Sheet No. BP-100

APPENDIX F

Marine Mammal Sightings

Appendix F
Marine Mammal Sightings

Harbor seal (HSEA) sighting
California sea lion (CASL) sighting
Stellar sea lion (STSL) si

Date	Event Code	Pile	Start Time	End Time	Species	Dist. To animal (m)	Dir. To animal (deg)	Dist to pile (m)	Best num of animals	Num of juv	Relative motion	Behavior 1	Behavior 2	Behavior 3	Const Type	Visi-bility	Weather	Glare (%)	BSS	Wave ht	Swell Dir	Comments
7/16/2013	PRE	NA	12:29:55	12:30:33	HSEA	200	0	250	1	0	Away	SW-S	DI		NONE	E	OC	0	1	0-3 ft	S	
7/16/2013	CON	NA	12:37:56	12:38:21	HSEA	50	140		1	1	None	RE			NONE	E	OC	20	2	0-3 ft		
7/16/2013	CON	NA	12:51:21	12:51:37	HSEA	150	22	200	1		None	LO	SI		NONE	E	OC	0	1	0-3 ft		
7/16/2013	CON	TT-1	14:45:20	14:45:45	HSEA	100	225	50	1		None	LO	SI		NONE	E	S	0	1	0-3 ft		Picking up TP2
7/16/2013	CON	TT-2	15:06:04	15:10:09	HSEA	154	110	150	1	0	None	RE	SI		NONE	E	S	0	1	0-3 ft		Observed resting then sank slowly
7/16/2013	CON	TT-2	15:08:37	15:09:53	HSEA	150	135	250	2		Toward	SW-N	DI		NONE	E	S	0	1	0-3 ft		same as Canaan sighting 1
7/16/2013	CON	TT-2	15:12:29	15:13:06	HSEA	50	270	60	2		Toward	SW-N	DI	SI	NONE	E	S	0	1	0-3 ft		same as Canaan sighting 1
7/16/2013	CON	TT-2	15:20:34	15:22:36	HSEA	50	158	150	1		None	LO	SI		NONE	E	S	0	1	0-3 ft		picking up hammer
7/16/2013	CON	TT-2	15:24:03	15:24:05	HSEA	50	270	45	1		Parallel	LO	SW-S	DI	NONE	E	S	0	1	0-3 ft		picking up hammer
7/16/2013	CON	TT-2	15:27:34	15:27:37	HSEA	40	100	15	1	1	None	RE			NONE	E	PC	20	2	0-3 ft		
7/16/2013	CON	TT-2	15:33:37	15:34:21	HSEA	227	140	225	1	1	Away	SW-SW	DI		V	E	S	0	1	0-3 ft		same as MC sighting # 2
7/16/2013	POST	NA	17:24:57	17:30:29	HSEA	150	195	400	1	0	Toward	LO	SI	LO	NONE	E	OC	0	1	0-3 ft		
7/16/2013	POST	NA	17:34:21	17:34:27	HSEA	175	112		1		Away	SW-S	DI		NONE	E	OC	0	1	0-3 ft		
7/16/2013	POST	NA	17:35:41	17:36:04	HSEA	165	90	200	1		Parallel	SW-N	DI		NONE	E	OC	0	1	0-3 ft		
7/16/2013	POST	NA	17:36:41	17:36:42	HSEA	140	202	80	1		Away	SW-W	DI		NONE	E	OC	0	1	0-3 ft		
7/16/2013	POST	NA	17:39:31	17:39:42	HSEA	160	135	180	1		Parallel	LO	SI		NONE	E	OC	0	1	0-3 ft		
7/18/2013	PRE	NA	7:05:57	7:07:58	HSEA	80	158	150	1		Parallel	SW-NE			NONE	E	OC	0	1	0-3 ft		
7/18/2013	PRE	NA	7:08:01	7:08:35	HSEA	100	180	145	1	0	None	LO	SI		NONE	E	OC	0	1	0-3 ft		Moving hammer
7/18/2013	CON	NA	7:17:58	7:18:03	HSEA	100	68	200	1		Parallel	SW-N	SI		NONE	E	OC	0	1	0-3 ft		hammer on TT3
7/19/2013	PRE	NA	7:27:55	7:29:37	HSEA	80	90	230	2	1	Toward	SW-NE	LO	SI	NONE	E	S	0	0	0-3 ft		Observed swimming together toward rig 1
7/19/2013	CON	TT-1	11:18:30	11:18:36	HSEA	126	202	156	1	0	None	LO	SI		NONE	E	S	0	1	0-3 ft		
7/19/2013	CON	TT-1	11:30:00	11:30:36	HSEA	105	225	120	2	0	Toward	SW-N	LO	SI	V	E	S	0	1	0-3 ft		
7/22/2013	CON	NA	0:00:00	10:20:02	HSEA	10	180	40	1	0	None	SI			NONE	G	OC	0	1	0-3 ft		
7/22/2013	CON	NA	10:00:00	10:02:00	HSEA	150	225	200	2		None	SP			NONE	G	OC	0	1	0-3 ft		
7/22/2013	CON	NA	11:03:59	11:04:10	HSEA	50	20	100	2	0	Toward	SW-SE	LO	SI	V	E	S	0	1	0-3 ft		
7/22/2013	CON	NA	14:04:26	14:05:59	HSEA	115	150	160	1	0	Away	SW-SW	SI		NONE	E	S	0	1	0-3 ft		Moving equipment

Date	Event Code	Pile	Start Time	End Time	Species	Dist. To animal (m)	Dir. To animal (deg)	Dist to pile (m)	Best num of animals	Num of juv	Relative motion	Behavior 1	Behavior 2	Behavior 3	Const Type	Visi-bility	Weather	Glare (%)	BSS	Wave ht	Swell Dir	Comments
7/22/2013	CON	NA	14:23:12	14:23:18	HSEA	150	150	155	1	0	Away	SW-SW	LO		NONE	E	S	0	1	0-3 ft		lifting template
7/22/2013	CON	NA	18:02:20	15:05:29	HSEA	60	130	100	1	0	Toward	SW-NE			NONE	E	S	0	1	0-3 ft		
7/23/2013	PRE	NA	8:30:35	8:30:40	HSEA	30	270	150	1	0	None	LO	DI		NONE	M	S	0	1	0-3 ft		
7/23/2013	CON	NA	10:20:31	10:20:34	HSEA	150	45	50	1	0	Away	TR-SE	DI		NONE	M	F	0	1	0-3 ft		
7/23/2013	CON	S-44	10:40:34	10:40:42	HSEA	175	90	200	1	0	Away	SW-S	SI		NONE	G	OC	0	1	0-3 ft		hammer on pile, vibing was off
7/23/2013	CON	C-1	10:52:00	10:52:30	HSEA	175	135	150	1	0	Away	SW-N	DI		NONE	G	S	0	1	0-3 ft		
7/23/2013	CON	C-1	11:01:21	11:01:26	HSEA	200	160	75	1	0	Away	FL	DI		V	G	S	0	1	0-3 ft		
7/23/2013	CON	C-1	11:01:52	11:01:55	HSEA	20	270	160	1	0	None	DI			NONE	G	S	0	1	0-3 ft		
7/23/2013	POST	S-44	11:23:29	11:41:22	HSEA	165	90	175	1	1	None	FL	SI	LG	NONE	G	S	0	1	0-3 ft		
7/23/2013	CON	S-44	11:33:16	11:42:58	HSEA	155	90	300	1		Parallel	SW-N	DI		NONE	G	S	0	1	0-3 ft		two seals in the area
7/23/2013	CON	NA	12:19:30	12:19:36	HSEA	15	280		1	0	Toward	SW-SE			NONE	E	S	0	1	0-3 ft		
7/24/2013	CON	N-44	9:58:12	9:58:16	HSEA	150	85	150	1	0	None	RE	LO	SI	NONE	E	S	20	1	0-3 ft		
7/24/2013	CON	N-44	10:00:51	10:00:58	HSEA	150	85	150	1	1	None	LO	RE	SI	NONE	E	S	0	1	0-3 ft		
7/24/2013	CON	N-44	11:00:31	11:00:44	HSEA	125	160	205	1	0	Away	FL	DI		NONE	E	S	0	0	0-3 ft		Observed SSE of ringer. No vibe during observation.
7/25/2013	CON	NA	10:12:55	10:14:55	HSEA	100	80	75	1	0	None	DI			NONE	G	S	0	0	0-3 ft		
7/25/2013	CON	N-44	10:22:08	10:22:10	HSEA	150	90	80	1	0	Away	SW-S			V	G	F	20	0	0-3 ft	N	
7/25/2013	MD	TT-3	10:25:08	10:25:14	HSEA	10	90	25	1	1	Away	SW-SW	DI		NONE	G	S	0	1	0-3 ft		for TT-3. Started after HSEA clear. Observed HSEA swim out of the shutdown zone.
7/25/2013	CON	TT-1	11:44:34	23:46:44	HSEA	5	90	15	1	1	None	FL	DI		NONE	G	S	0	1	0-3 ft		not observed again. Same juvenile as ightings 1 and 2.
7/25/2013	CON	NA	12:21:11	12:23:44	HSEA	4	80	24	1	1	Away	FL	DI		NONE	G	S	0	0	0-3 ft		Same individualas previous 3 sightings. Observed during lunch
7/25/2013	CON	NA	12:50:21	12:50:28	HSEA	95	160	110	1	1	None	DI			NONE	G	S	0	0	0-3 ft		same individual as previous
7/25/2013	CON	TT-4	13:02:17	13:03:06	HSEA	170	180	200	1		Parallel	SW-N			NONE	G	S	5	1	0-3 ft		sighting just prior to vibe
7/25/2013	CON	NA	13:06:07	13:06:09	HSEA	130	170	140	1		None	DI			NONE	G	S	0	0	0-3 ft		Thrash dive
7/25/2013	CON	NA	13:12:07	13:12:12	HSEA	45	90	60	2		Parallel	SW-N	DI		NONE	G	S	0	0	0-3 ft		
7/25/2013	CON	TT-4	13:35:03	13:35:12	HSEA	400	180	350	1		Parallel	SW-N			NONE	G	S	5	1	0-3 ft		
7/25/2013	POST	TT-4	18:15:21	18:15:52	HSEA	350	100	500	1		None	LO			NONE	G	S	25	2	0-3 ft		
7/26/2013	CON	N-44	10:41:38	10:41:45	HSEA	200	100	330	1		Parallel	SW-N			I	G	S	25	1	0-3 ft		
7/26/2013	CON	N-44	10:44:55	10:45:01	HSEA	20	90	100	1		Toward	SW-N	DI		I	G	S	20	2	0-3 ft		
7/26/2013	CON	J-44	11:13:35	11:13:45	HSEA	250	130	300	1		Toward	SW-NW			I	G	S	0	1	0-3 ft		

Date	Event Code	Pile	Start Time	End Time	Species	Dist. To animal (m)	Dir. To animal (deg)	Dist to pile (m)	Best num of animals	Num of juv	Relative motion	Behavior 1	Behavior 2	Behavior 3	Const Type	Visi-bility	Weather	Glare (%)	BSS	Wave ht	Swell Dir	Comments
7/27/2013	CON	R.2-43	8:19:01	8:19:08	HSEA	60	115	160	1		None	LO			NONE	G	S	25	1	0-3 ft		
7/27/2013	CON	NA	8:26:00	8:26:35	HSEA	125	320	50	1		Away	SW-W			NONE	G	S	0	1	0-3 ft		Lifting pile R2-43
7/27/2013	CON	R.2-43	8:35:02	8:35:09	HSEA	15	180	90	1		Parallel	SW-W			NONE	G	S	25	1	0-3 ft		
7/27/2013	CON	R.2-43	8:38:33	8:38:38	HSEA	15	45	99	1		Toward	SW-W			NONE	G	S	25	1	0-3 ft		
7/27/2013	CON	N-44	8:47:10	8:47:25	HSEA	20	22	65	1	0	Toward	SP	SI		NONE	G	S	20	0	0-3 ft		Kelsey recording pile drive times
7/27/2013	CON	R.2-43	8:48:42	8:55:49	HSEA	80	45	40	1		None	LO	SW-S	SW-W	NONE	G	S	25	1	0-3 ft		
7/27/2013	CON	R.2-43	9:16:07	9:16:46	HSEA	30	315	190	1		Away	SW-SW			NONE	G	S	30	1	0-3 ft		
7/27/2013	CON	N-43	11:01:08	11:02:34	HSEA	30	180	50	1		None	LO	SW-SW		NONE	G	S	25	2	0-3 ft		lost sight of seal as animal swam around south end of rig #2
7/27/2013	CON	B-1	14:12:11	14:12:32	HSEA	100	90	110	1		Away	LO	SW-SW		NONE	G	S	25	2	0-3 ft		
7/27/2013	CON	B-1	15:21:05	15:21:08	HSEA	100	90	200	1	1	Parallel	LO			I	G	S	25	1	0-3 ft		
7/29/2013	PRE	X.8-42	8:44:08	8:50:22	HSEA	200	135	500	2		Parallel	SW-N	LO	SW-S	NONE	G	PC	25	1	0-3 ft		Some interaction.
7/29/2013	PRE	X.8-42	8:51:51	9:00:17	HSEA	375	135	500	1		None	LO			NONE	G	PC	25	1	0-3 ft		One of the same animals as as in sighting #1
7/29/2013	CON	X.8-42	9:10:57	9:24:57	HSEA	150	135	200	2		Away	SW-S	DI	LO	NONE	G	PC	25	1	0-3 ft		Same animals as in sighting 1 and 2. Swimming close together, dived togethe
7/29/2013	CON	B-1	9:25:42	9:27:24	HSEA	100	112	200	3		Toward	LO	SP	DI	NONE	G	PC	15	1	0-3 ft		Two animals close together , within a meter. Other north of tm 25 meters away.
7/29/2013	CON	B-1	9:30:49	9:34:19	HSEA	150	135	225	2	2	Parallel	SW-S			NONE	G	PC	25	1	0-3 ft		
7/29/2013	CON	B-1	9:45:24	10:05:01	HSEA	100	112	300	2		None	LO			NONE	G	PC	25	1	0-3 ft		
7/29/2013	CON	X.8-42	10:05:26	10:07:28	HSEA	150	135	500	2		None	LO			V	G	PC	15	1	0-3 ft		Same animals during vibe.
7/29/2013	CON	B-1	10:11:47	10:12:15	HSEA	150	90	300	2		Parallel	SW-N	DI		SSI	G	PC	15	1	0-3 ft		Same animals. During soft start. Swimming out of area.
7/29/2013	CON	W-42	10:56:12	10:56:14	HSEA	65	90	70	1	1	Away	FL	DI		NONE	G	S	0	0	0-3 ft		
7/29/2013	CON	W-42	12:38:23	12:38:28	HSEA	30	110	75	1	1	Away	TR-E	DI		NONE	G	S	0	2	0-3 ft		
7/29/2013	CON	T.1-42	12:40:29	12:46:09	HSEA	700	112	550	2		None	LO	SW-N		NONE	G	PC	15	1	0-3 ft		
7/29/2013	CON	T.1-42	13:25:49	13:25:50	HSEA	325	90	500	1		None	LO	DI		NONE	G	PC	15	1	0-3 ft		
7/29/2013	CON	T.1-42	14:27:11	14:27:26	HSEA	175	202	60	1		Toward	SW-NE			NONE	G	PC	15	1	0-3 ft		swimming toward barge, northeast, 60 meters to pile being vibed
7/29/2013	CON	T.1-42	14:41:20	14:41:52	HSEA	150	180	150	1		Toward	SW-NE			V	G	PC	15	1	0-3 ft		likely same seal swimming around barges
7/29/2013	CON	T.1-42	15:02:47	15:02:57	HSEA	50	135	180	1	1	Away	TR-SE	SI		V	G	S	40	0	0-3 ft		
7/29/2013	CON	T.1-42	15:14:20	15:14:33	HSEA	69	112	130	1	1	Toward	SW-NW	DI		V	G	S	40	1	0-3 ft		
7/29/2013	CON	NA	15:17:27	15:17:30	HSEA	75	112	120	1	1	None	RE	SI		V	G	S	40	1	0-3 ft		

Date	Event Code	Pile	Start Time	End Time	Species	Dist. To animal (m)	Dir. To animal (deg)	Dist to pile (m)	Best num of animals	Num of juv	Relative motion	Behavior 1	Behavior 2	Behavior 3	Const Type	Visi-bility	Weather	Glare (%)	BSS	Wave ht	Swell Dir	Comments
7/29/2013	CON	NA	15:30:48	15:30:58	HSEA	5	135	80	1	1	None	RE	DI		NONE	G	S	40	1	0-3 ft		
7/29/2013	CON	NA	15:37:52	15:38:06	HSEA	45	135	110	1	1	Away	SW-SE	DI		NONE	G	S	40	1	0-3 ft		
7/29/2013	CON	NA	15:40:11	15:40:35	HSEA	88	112	160	1	1	None	SW-S	RE	DI	NONE	G	S	40	0	0-3 ft		
7/29/2013	CON	NA	16:00:59	16:01:03	HSEA	65	112	75	1	1	Parallel	SW-SW	DS		NONE	G	S	40	0	0-3 ft		
7/29/2013	POST	NA	16:43:35	16:43:47	HSEA	30	315	45	1	1	None	RE	DI		NONE	G	S	40	0	0-3 ft		
7/29/2013	POST	J-43	16:45:12	16:57:36	HSEA	50	180	350	2		Away	LO	SI		NONE	G	PC	15	1	0-3 ft		
7/30/2013	CON	R.4-42	9:33:27	9:33:32	HSEA	200	180	275	1		Toward	SW-N			NONE	G	OC	0	1	0-3 ft		
7/30/2013	CON	R.4-42	10:08:33	10:08:36	HSEA	80	180	75	1		Toward	SW-W	DI		NONE	G	OC	0	1	0-3 ft		
7/30/2013	CON	R.4-42	11:03:53	11:03:56	HSEA	80	180	160	1		Parallel	LO	DI		NONE	G	PC	0	1	0-3 ft		likely same animal as in sighting 1 and 2
7/30/2013	CON	N-42	11:19:56	11:20:07	HSEA	330	112	410	1		Parallel	SW-N	DI	SP	NONE	G	PC	0	1	0-3 ft		
7/30/2013	CON	N-42	11:30:31	11:30:38	HSEA	80	180	120	1		Parallel	SW-SW	DI		V	G	PC	0	1	0-3 ft		
7/30/2013	CON	J-42	14:55:17	15:02:36	HSEA	20	312	75	2		Toward	LO	SI	DI	NONE	E	S	0	1	0-3 ft		after vibe
7/30/2013	CON	J-42	15:14:41	15:15:49	HSEA	650	180	560	1		Away	SW-S			NONE	E	S	0	1	0-3 ft		
7/30/2013	CON	X.8-41	16:08:25	16:08:42	HSEA	650	180	550	1		Away	SW-S			NONE	G	S	0	1	0-3 ft		barge moved in line of sight
7/30/2013	CON	X.8-41	16:28:10	16:32:27	HSEA	360	180	480	1		Toward	SW-N			V	G	OC	0	1	0-3 ft		
7/30/2013	CON	X.8-41	16:30:11	16:31:42	HSEA	120		125	1	1	None	RE	SI		V	G	S	60	0	0-3 ft		
7/30/2013	CON	X.8-41	16:42:58	16:43:01	HSEA	120		135	1	1	None	RE	SI		V	G	S	60	0	0-3 ft		
7/31/2013	PRE	W-41	8:23:24	8:23:30	HSEA	25	312	150	1		Toward	LO	DI	SW-S	NONE	G	F	0	1	0-3 ft		animal approaching piling
7/31/2013	CON	W-41	8:48:35	8:49:42	HSEA	180	340	350	1		Toward	LO	SW-S	DI	NONE	G	F	0	1	0-3 ft		
7/31/2013	CON	W-41	8:50:18	8:50:23	HSEA	165	355	330	1		Away	SW-N	DI		V	G	F	0	1	0-3 ft		
7/31/2013	CON	W-41	8:51:04	8:52:08	HSEA	255	355	315	1		Parallel	SW-E	DI		NONE	G	F	0	1	0-3 ft		
7/31/2013	CON	W-41	9:46:31	10:20:09	HSEA	100	212	325	1		None	LO	SW-SE	SI	NONE	G	F	0	1	0-3 ft		floating and playing with something
7/31/2013	CON	T.8-41	10:47:43	10:47:45	HSEA	550	180	475	1		Away	SW-W			NONE	G	F	0	1	0-3 ft		
7/31/2013	CON	T.8-41	10:51:02	10:51:09	HSEA	220	45	214	1	1	Parallel	SW-N	SI		NONE	G	OC	15	0	0-3 ft		stabbing
7/31/2013	CON	T.8-41	11:05:51	11:06:07	HSEA	220	158	260	1	1	Parallel	SW-N	SI		NONE	G	OC	15	0	0-3 ft		
7/31/2013	CON	T.8-41	11:20:53	11:21:02	HSEA	167	180	190	1	1	Parallel	SW-W	SI		NONE	G	OC	15	0	0-3 ft		
7/31/2013	CON	T.8-41	11:26:26	11:26:33	HSEA	8	338	18	1	1	Toward	LO	SW-W		V	G	OC	0	0	0-3 ft		
7/31/2013	CON	NA	13:15:51	13:16:05	HSEA	7	158	55	1	1	None	LO	RE	DI	NONE	G	PC	0	1	0-3 ft		
7/31/2013	CON	T.1-41	13:38:30	13:38:39	HSEA	120	212	85	1	1	Toward	SW-NE	DI		NONE	E	PC	20	1	0-3 ft		
7/31/2013	CON	R.4-41	13:45:01	13:45:12	HSEA	50	285	75	1	1	Toward	SW-S	DI		NONE	E	PC	20	1	0-3 ft		
7/31/2013	CON	R.4-41	13:54:23	13:54:50	HSEA	475	170	400	1		Away	SW-S	DI		NONE	E	PC	20	1	0-3 ft		

Date	Event Code	Pile	Start Time	End Time	Species	Dist. To animal (m)	Dir. To animal (deg)	Dist to pile (m)	Best num of animals	Num of juv	Relative motion	Behavior 1	Behavior 2	Behavior 3	Const Type	Visi-bility	Weather	Glare (%)	BSS	Wave ht	Swell Dir	Comments
7/31/2013	CON	R.4-41	13:54:29	13:54:40	HSEA	110	190	125	1		Toward	SW-N	DI		NONE	E	PC	20	1	0-3 ft		
7/31/2013	CON	R.4-41	14:07:18	14:07:34	HSEA	180	180	235	2		Away	SW-S	SI		NONE	E	PC	20	1	0-3 ft		
7/31/2013	CON	R.4-41	14:09:48	14:09:50	HSEA	6	338	32	1	1	None	LO	RE	DI	NONE	G	PC	0	1	0-3 ft		
7/31/2013	MD	R.4-41	14:12:26	14:12:33	HSEA	5	22	9	1	1	None	LO	DI		NONE	G	S	0	1	0-3 ft		Delay of onset of vibe driving when animal surfaced in to zone between drives.
7/31/2013	MD	R.4-41	14:13:38	14:13:50	HSEA	3	0	18	1	1	None	LO	RE	SI	V	G	OC	0	1	0-3 ft		Seal observed outside SD zone, resumed pile driving
7/31/2013	CON	NA	14:47:44	14:46:05	HSEA	50	80	55	1	1	None	RE	SI		NONE	E	S	0	1	0-3 ft		
7/31/2013	CON	N-41	14:52:11	14:54:59	HSEA	300	180	300	1	1	Away	SW-S	DI		NONE	E	PC	20	1	0-3 ft		
7/31/2013	CON	NA	15:00:23	15:01:03	HSEA	20	40	40	1	1	Toward	SW-W	DI		NONE	E	S	0	1	0-3 ft		
7/31/2013	CON	NA	15:02:35	15:02:40	HSEA	25	90	65	1	1	Parallel	LO	RE	DI	NONE	G	OC	0	1	0-3 ft		
7/31/2013	CON	N-41	15:03:26	15:13:49	HSEA	40	205	85	1	1	Away	SW-S	SW-N	DI	NONE	E	PC	20	1	0-3 ft		behavior 1 and 2 separated by appx 2 mins. Animal 200m SE of previous sighting. Swimming back-forth, could be foraging.
7/31/2013	CON	N-41	15:14:20	15:14:42	HSEA	115	180	115	1	1	None	SW-N	DI		V	E	PC	20	1	0-3 ft		surfaced and quickly dove
7/31/2013	CON	N-41	15:16:00	15:16:10	HSEA	95	180	130	1	1	None	SW-E	SI		V	G	S	0	0	0-3 ft		
7/31/2013	CON	NA	15:18:31	15:18:38	HSEA	45	90	103	1	1	Toward	SW-W	DI		NONE	G	S	0	0	0-3 ft		
7/31/2013	CON	N-41	15:24:38	15:24:59	HSEA	185	170	170	1	1	None	LO	DI		NONE	E	PC	20	1	0-3 ft		
7/31/2013	CON	L-41	16:03:19	16:03:32	HSEA	5	112	44	1	1	None	RE	DI		V	G	OC	0	0	0-3 ft		
7/31/2013	CON	L-41	16:06:15	16:06:19	HSEA	77	135	110	1	1	None	MI	DI		V	G	OC	0	1	0-3 ft		
7/31/2013	CON	J-41	16:46:08	16:46:39	HSEA	60	200	115	1		Toward	SW-NE	DI		NONE	E	PC	20	1	0-3 ft		
7/31/2013	CON	J-41	16:52:11	16:52:16	HSEA	5	112	45	1	1	None	MI	RE	SI	V	G	OC	0	0	0-3 ft		
7/31/2013	CON	J-41	16:53:37	16:53:48	HSEA	5	112	45	1	1	None	MI	DI		V	G	OC	0	0	0-3 ft		
7/31/2013	CON	J-41	16:54:01	16:54:29	HSEA	150	150	170	1		Toward	SW-N	SI		V	E	PC	20	1	0-3 ft		
7/31/2013	POST	J-41	17:08:39	17:08:50	HSEA	55	195	115	1		Toward	SW-N	LO		NONE	E	PC	20	1	0-3 ft		
7/16/2013	POST	NA	17:18:39	17:19:25	HSEA	5	0	8	1	1	None	RE	DI		NONE	E	S	20	1	0-3 ft		
8/1/2013	CON	S-43	11:14:00	11:15:00	HSEA	325	180	280	1		Away	SW-N	SW-S		I	E	PC	20	2	0-3 ft		
8/1/2013	CON	S-43	11:19:51	11:20:56	HSEA	125	180	150	1		Toward	SW-N			I	E	PC	20	2	0-3 ft		
8/1/2013	POST	N-40	16:19:45	16:20:17	HSEA	8	355	20	1	1	Toward	SW-E	DI		NONE	G	PC	5	1	0-3 ft		Delayed vibe pile driving to insure animal was out of area. Observation occurred after impact hammer driving ended for day, before vibe started on
8/1/2013	CON	N-40	16:42:41	16:43:02	HSEA	10	355	15	1	1	Away	SW-NE	DI		NONE	G	PC	5	1	0-3 ft		Resight after vibe had stopped. Confirmed heading NE away from barge appx 70m
8/1/2013	CON	L-40	17:14:55	17:15:46	HSEA	10	350	46	1	1	Away	SW-NE	LO	DI	NONE	G	OC	0	1	0-3 ft		Confirmed out of zone appx 95m

Date	Event Code	Pile	Start Time	End Time	Species	Dist. To animal (m)	Dir. To animal (deg)	Dist to pile (m)	Best num of animals	Num of juv	Relative motion	Behavior 1	Behavior 2	Behavior 3	Const Type	Visi-bility	Weather	Glare (%)	BSS	Wave ht	Swell Dir	Comments
8/2/2013	CON	J-40	8:46:33	8:46:57	HSEA	180	115	250	1		Parallel	SW-N	LO	SI	NONE	G	OC	0	1	0-3 ft		
8/2/2013	CON	V.1-43	9:20:07	9:33:57	HSEA	115	88	180	1	0	None	MI	FO	SW-N	I	E	OC	0	1	0-3 ft		located dirrectly under southwestern white guard stand; appeared to be milling around flipping and diving and feeding around the piles; travelled north at 09:00
8/2/2013	CON	V.1-43	9:21:25	9:21:29	HSEA	35	300	135	1		Toward	LO	SI		I	G	OC		1	0-3 ft		NOT same sighting as Dana
8/2/2013	CON	T.5-43	10:03:21	10:04:10	HSEA	320	160	470	1		Toward	SW-N	LO	SI	I	G	OC	0	1	0-3 ft		
8/2/2013	CON	NA	10:15:49	10:17:53	HSEA	156	347		1	0	Away	TR-NW	DI		NONE	E	OC	0	1	0-3 ft		Traveled towards WRA barrier; placing hammer on pile
8/2/2013	CON	W-42	10:29:51	10:38:00	HSEA	10	87	130	1	0	Away	SW-E	DI	TR-N	I	E	L	0	1	0-3 ft		initial sighting was 10 m away from me; later about 100 m; dove once mammal scurity boat passed; swimming north after surfacing under white guard shack; light rain
8/2/2013	CON	W-42	10:35:44	10:35:51	HSEA	47	315	204	1		None	LO	FL	DI	I	G	R	0	1	0-3 ft		
8/2/2013	CON	T.8-42	10:49:00	10:49:21	HSEA	79	177	180	2		Away	SW-S	DI		NONE	G	R	0	1	0-3 ft		
8/2/2013	CON	T.1-42	12:46:11	12:46:22	HSEA	209	175	450	1		Toward	SW-N	SI		NONE	G	R	0	1	0-3 ft		before impact driving
8/2/2013	CON	T.1-42	13:13:30	13:14:04	HSEA	79	175	145	1		Toward	SW-N	DI		NONE	G	R	0	1	0-3 ft		after impact driving
8/2/2013	CON	S-39	13:20:14	13:20:18	HSEA	55	260	75	1		Away	FL	LO	DI	NONE	G	L	0	0	0-3 ft		
8/2/2013	CON	S-39	13:55:01	13:55:02	HSEA	45	150	80	1	1	Parallel	DI			NONE	G	L	0	0	0-3 ft		
8/2/2013	MS	S-39	14:00:56	14:01:59	HSEA	5	0	8	1	1	None	FL	LO	DI	NONE	G	L	0	0	0-3 ft		Shutdown for 59 seconds. Observed mammal out of SD zone and resumed driving pile.
8/2/2013	CON	S-39	14:16:14	14:16:40	HSEA	2	0	4	1	1	None	FL	RE	DI	NONE	G	L	0	0	0-3 ft		Observed resting on vibe hammer hydrolic lines (in water). The dove under barge away from consruction.
8/2/2013	CON	T.1-42	14:23:11	14:24:45	HSEA	84	180	220	1		Toward	SW-S	SW-N	DI	NONE	G	R	0	1	0-3 ft		potential resight observed by Dana appx 1438
8/2/2013	CON	NA	14:36:36	14:39:56	HSEA	43	180	34	1	0	Toward	SW-NW	DI		NONE	E	L	0	1	0-3 ft		putting hammers on. Sighted from rig 1; swam toward pile o be vibed
8/2/2013	CON	R.2-39	14:36:56	14:37:02	HSEA	8	250	20	1	1	Away	DI			NONE	G	L	0	0	0-3 ft		
8/2/2013	CON	NA	14:38:02	14:40:04	HSEA	132	172		1	0	None	SW-N	DI		NONE	E	L	0	1	0-3 ft		Moving gear; potential resighting of nick's
8/2/2013	CON	N-39	15:43:16	15:43:49	HSEA	306	180	475	1		Toward	SW-N	DI		V	G	R	0	1	0-3 ft		seen during vibe, before impact began
8/2/2013	CON	L-39	16:15:11	16:15:44	HSEA	1	15	20	1	1	None	RE	LO	DI	NONE	G	L	0	0	0-3 ft		
8/2/2013	CON	L-39	16:23:18	16:23:41	HSEA	222	180	260	1		Away	SW-S	DI		NONE	G	R	0	1	0-3 ft		

Date	Event Code	Pile	Start Time	End Time	Species	Dist. To animal (m)	Dir. To animal (deg)	Dist to pile (m)	Best num of animals	Num of juv	Relative motion	Behavior 1	Behavior 2	Behavior 3	Const Type	Visi-bility	Weather	Glare (%)	BSS	Wave ht	Swell Dir	Comments
8/2/2013	CON	L-39	16:30:12	16:30:22	HSEA	88	290	9	1		Toward	SW-E	SW-S	DI	NONE	G	R	0	1	0-3 ft		
8/2/2013	CON	L-39	16:38:28	16:45:51	HSEA	134	90	487	1	0	None	SW-S	DI		V	E	L	0	1	0-3 ft		rig 1 moved south about 600 m north of marginal pier
8/2/2013	CON	L-39	16:42:41	16:47:47	HSEA	62	225	55	1		None	FL	DI	SW-S	V	G	R	0	1	0-3 ft		sighted heading S away from vibe
8/2/2013	POST	NA	16:52:04	16:52:13	HSEA	14	12	10	1		None	LO	DI		NONE	G	R	0	1	0-3 ft		Just after vibe ended
8/2/2013	POST	NA	16:57:59	16:58:00	HSEA	375	180	325	1		Away	SW-S			NONE	G	R	0	1	0-3 ft		
8/2/2013	POST	L-39	17:01:59	17:02:02	HSEA	115	70	115	1	0	Parallel	DI			NONE	G	L	0	0	0-3 ft		
8/2/2013	POST	L-39	17:05:38	17:06:00	HSEA	50	100	65	1	1	Toward	TR-W	DI		NONE	G	L	0	0	0-3 ft		
8/2/2013	POST	NA	17:09:38	17:09:51	HSEA	165	160	110	1		Parallel	SW-N	DI		NONE	G	R	0	1	0-3 ft		
8/2/2013	POST	NA	17:10:44	17:10:46	HSEA	40	340		1	0	Toward	DI			NONE	G	L	0	0	0-3 ft		
8/3/2013	CON	NA	7:34:09	7:34:26	HSEA	50	270	80	1		Parallel	SW-S	SI		NONE	G	PC	0	1	0-3 ft		
8/3/2013	CON	NA	7:58:40	8:05:33	HSEA	245	170	312	1	0	Away	SW-S	DI		NONE	G	OC	0	0	0-3 ft		
8/3/2013	CON	S-38	8:33:23	8:37:35	HSEA	40	72	90	1	0	Toward	SW-NE	DI	SW-NE	V	G	OC	0	1	0-3 ft		sighted by ds swimming northeast toward rig 1; later potentially resighted by kelsie swimming east
8/3/2013	CON	NA	9:12:15	9:15:30	HSEA	168	88		1	0	None	MI	DI		NONE	G	OC	0	1	0-3 ft		Surfaced milled dove; construction consisted of moving pile spacers on pile barge, no vibing
8/3/2013	CON	NA	9:19:47	9:36:21	HSEA	70	180		1	0	None	PL	SW-E	DI	NONE	G	OC	0	1	0-3 ft		PL then MI then DI; surfaced about10 m from pile barge heading toward Rig 1 then dove; still preparing pile on pile barge; swam around pile barge sighted by Kelsey then approached our vessel within 10 m
8/3/2013	CON	NA	9:29:17	9:30:02	HSEA	80	45	120	1		Away	SW-NW			NONE	G	PC	0	1	0-3 ft		TABLET 3 sighting 4
8/3/2013	CON	NA	10:03:42	10:03:47	HSEA	80	45	90	1		Parallel	SW-S			NONE	G	PC	0	1	0-3 ft		ST R.2-38
8/3/2013	CON	NA	10:53:52	10:58:54	HSEA	150	90	150	1	0	Toward	SW-NW	DI		NONE	G	PC	0	1	0-3 ft		swimming nw toward staked pile (11:01, n38); later sighted by kelsie
8/3/2013	CON	N-38	10:58:57	10:59:17	HSEA	80	22	90	1		Away	SW-N			NONE	G	PC	0	1	0-3 ft		UNHOOKING PILE tablet 3 sighting 5
8/3/2013	CON	N-38	11:06:10	11:13:06	HSEA	156	90	159	1	0	Away	TR-S	DI		NONE	G	PC	0	1	0-3 ft		traveling south; dove when SWF Security boat approached;sighted swimmibg about 20 m parallel to shore

Date	Event Code	Pile	Start Time	End Time	Species	Dist. To animal (m)	Dir. To animal (deg)	Dist to pile (m)	Best num of animals	Num of juv	Relative motion	Behavior 1	Behavior 2	Behavior 3	Const Type	Visi-bility	Weather	Glare (%)	BSS	Wave ht	Swell Dir	Comments
8/3/2013	CON	NA	11:19:52	11:35:01	HSEA	170	90	200	1	0	Toward	SW-N	SI		NONE	G	PC	0	1	0-3 ft		sighted after vibing activities occurred swimming along the shoreline about 15m. North to south and back milling about (11:27-
8/3/2013	CON	NA	11:37:44	11:39:57	HSEA	102	70		1	0	Toward	SW-NW	DI		NONE	G	PC	0	1	0-3 ft		Could be same individual sighted pacing north to south; sighted for brief momment until it dove behind southeast corner of pile barge; construction was preparing next pile
8/3/2013	CON	N-38	11:39:08	11:39:29	HSEA	85	22	50	1		Away	SW-N			NONE	G	PC	0	1	0-3 ft		picking up pile L-38
8/3/2013	CON	L-38	12:18:22	12:18:33	HSEA	20	90	60	1		Away	SW-E	DI		V	G	PC	0	1	0-3 ft		
8/3/2013	CON	J-38	13:47:35	13:55:10	HSEA	150	90	197	2	1	Away	SW-S	DI	TR-S	V	G	PC	0	2	0-3 ft		cow and calf pair swimming south; construction was removing the vibe hammer on the last pile of the day
8/3/2013	CON	NA	14:12:01	14:14:03	HSEA	5	0		1	0	Away	SW-NW	DI		NONE	G	PC	0	2	0-3 ft		Sighted while circling NW bouy
8/5/2013	CON		7:54:00	8:24:00	HSEA	40	150		1	0	None	DI	MI		NONE	G	F	10	1	0-3 ft		Working but not driving piles; rig 2 preparing to move; surfaced at sw pile
8/5/2013	CON	N-37	9:09:15	9:14:39	HSEA	265	90		1		None	SW-S	SW-E		NONE	G	F	10	1	0-3 ft		
8/5/2013	CON	n-37	9:14:13	9:17:57	HSEA	10	80	150	1		None	SW-W	MI		NONE	G	F	10	1	0-3 ft		not driving pile, moving pile n-37
8/5/2013	CON		9:28:50	9:28:52	HSEA	80	95	100	1		None	DI			NONE	G	F	10	1	0-3 ft		prepping to drive, resight of 3
8/5/2013	CON		10:05:41	10:05:56	HSEA	50	30	50	1		None	LO			NONE	G	F	10	1	0-3 ft		
8/5/2013	CON	NA	10:11:35	10:11:37	HSEA	5	190	30	1	0	Away	DI			NONE	E	PC	0	1	0-3 ft		construction was preparing the pile; distance to pile area.
8/5/2013	CON		10:24:00	10:24:10	HSEA	190	95		1		Parallel	SW-N	SW-S		NONE	G	S	15	1	0-3 ft		Saw seal swim and dive at 10:24
8/5/2013	CON		10:30:37	10:31:00	HSEA	75	90	85	1		Parallel	SW-N			NONE	G	S	15	1	0-3 ft		prepping to vibe
8/5/2013	CON	NA	11:01:28	11:03:29	HSEA	10	97	76	1	0	Away	DI	SW-E	DI	NONE	E	PC	0	1	0-3 ft		construction prepared bubble curtain; distance to pile area
8/5/2013	CON		11:03:51	11:04:00	HSEA	75	95	300	1		None	DI			NONE	G	S	15	1	0-3 ft		possibly the same seal as number 5
8/5/2013	CON	T.8-41	11:54:41	11:55:00	HSEA	150	95	250	1	1	Parallel	SW-N			I	E	S	15	1	0-3 ft		just done vibing and hammering t.8-41
8/5/2013	CON		12:34:44	12:35:00	HSEA	20	90	350	1		None	SI			NONE	E	S	15	1	0-3 ft		saw while starting movement for transect

Date	Event Code	Pile	Start Time	End Time	Species	Dist. To animal (m)	Dir. To animal (deg)	Dist to pile (m)	Best num of animals	Num of juv	Relative motion	Behavior 1	Behavior 2	Behavior 3	Const Type	Visi-bility	Weather	Glare (%)	BSS	Wave ht	Swell Dir	Comments
8/5/2013	CON	R.4-41	13:06:33	13:12:35	HSEA	50	88	80	1	0	Toward	SW-W	DI	SW-NW	NONE	E	PC	0	1	0-3 ft		spotted swimming between northeast side of future EHW2 and southeastside of EHW1; dove and surfaced on other side of EH1; sighted white adjusting hammer on pile R-4-41
8/5/2013	CON	R.4-41	13:33:33	13:42:47	HSEA	58	10	107	1	0	Away	SW-SE	DI		I	E	PC	0	1	0-3 ft		continued swimming along shoreline south towards marginal after impact (verified by vessel mmo)
8/5/2013	CON	N-41	13:55:31	13:56:00	HSEA	250	120	250	1		None	SW-S	DI		I	E	S	20	1	0-3 ft		impact pile driving
8/5/2013	CON	N-41	14:14:53	14:18:32	HSEA	212	174	251	1	0	Away	SW-S	SI		NONE	E	PC	0	1	0-3 ft		construction was removing the hamer and bubble curtain from pie N-41
8/6/2013	CON	N-35	8:07:26	8:15:56	CASL	85	75	200	1	0	Away	DI	SW-SW	CH	NONE	P	F	0	1	0-3 ft		construction crew was preparing for the day; sighting occurred about 4 meters off west side of rig 1; surfaced and chuffed about 3 m southwest side of vessel; distance to pile area=dist to pile
8/6/2013	CON	N-35	9:43:47	9:43:52	HSEA	175	100	175	1		Parallel	SW-S			V	G	S	10	1	0-3 ft		
8/6/2013	CON	NA	10:27:35	10:32:36	HSEA	115	187	200	1	0	Away	SW-SW	SI		NONE	G	S	0	1	0-3 ft		sighted swimming south past the green pile barges; construction conducted prep work opperations; distance to pile area=dist to pile
8/6/2013	CON	L-35	11:10:36	11:12:37	HSEA	115	5	80	1	0	None	SI			NONE	G	S	0	1	0-3 ft		surfaced about 80 m from the pile and sank; constructiin was stabing the pile into place, possibly sighted again by Jason
8/6/2013	CON	L-35	11:15:17	11:16:00	HSEA	50	245	75	1		Parallel	DI			NONE	E	S	10	1	0-3 ft		possibly Dana's 3rd sighting, placing pile
8/6/2013	CON	J-35	11:40:52	11:45:35	HSEA	130	90	130	1	0	None	SI	SP	DI	NONE	G	S	0	1	0-3 ft		construction was preparing next pile; sank surfaced jumped splashed dove
8/6/2013	CON	N-34	13:03:23	13:14:33	HSEA	207	100	200	1	0	Parallel	SW-N	SI	SW-S	NONE	G	S	0	1	0-3 ft		construction was prepping pile; sighted swimming north about 10 m from shoreline;sighted again at 11:14 heading south towards marginal wharf
8/6/2013	CON	N-34	13:17:05	13:24:23	HSEA	59	90	153	1	0	Away	MI	SI		NONE	G	S	0	1	0-3 ft		construction was prepping pile
8/6/2013	CON	N-34	13:46:36	13:49:52	HSEA	13	178	140	1	0	Toward	SW-NE	SP	SI	NONE	G	S	0	1	0-3 ft		construction was placing hammer on pile
8/6/2013	CON	N-34	13:58:14	13:58:40	HSEA	200	130	200	1		None	LO			NONE	E	S	10	1	0-3 ft		batter pile 2 of the day, prepping to vibe

Date	Event Code	Pile	Start Time	End Time	Species	Dist. To animal (m)	Dir. To animal (deg)	Dist to pile (m)	Best num of animals	Num of juv	Relative motion	Behavior 1	Behavior 2	Behavior 3	Const Type	Visi-bility	Weather	Glare (%)	BSS	Wave ht	Swell Dir	Comments
8/6/2013	CON	N-34	14:07:39	14:18:00	HSEA	300	168	330	2	1	None	MI	SP	SI	V	G	S	0	2	0-3 ft		this is a batter pile; cowand calf pair sighting less than5 meters from shoreline; swam calmly away (south along shoreline) as hammer increased;
8/6/2013	CON	N-34	14:12:31	14:13:00	HSEA	220	95	215	1		None	LO			V	E	S	20	2	0-3 ft	SE	
8/6/2013	CON	NA	14:25:33	14:37:32	HSEA	70	180	200	1	0	None	SW-SW	DI	SP	NONE	G	S	0	2	0-3 ft		dist to pile area=dist to pile; preparing next pile L-34
8/6/2013	CON	NA	14:38:15	14:48:04	HSEA	376	134	400	2	1	None	SP	SI	MI	NONE	G	S	0	2	0-3 ft		moving pile L-34; same area as sughting 8 with ciw and calf pair near white dead tree about 28 m from shoreline; cow keeping eye on calf playing and splashing
8/6/2013	CON	L-34	15:01:21	15:02:00	HSEA	250	100	250	1		None	LO	SI		V	E	S	15	2	0-3 ft	SE	
8/6/2013	CON	J-34	15:40:43	15:41:00	HSEA	50	355	45	1		None	LO	SI		NONE	E	S	10	2	0-3 ft	SE	prepping to vibe
8/7/2013	CON	N-33	7:41:50	7:42:00	HSEA	100	0	50	1		Away	SW-NW	LO		NONE	M	F	10	1	0-3 ft		prepping to drive
8/7/2013	CON	N-33	9:24:52	9:51:34	HSEA	175	110	200	1		None	SW-S	LO	SI	V	G	S	10	1	0-3 ft		appeared to be the same seal, staying within a 50 m area
8/7/2013	CON	N-33	9:55:07	9:56:07	HSEA	160	100	200	1		None	SW-S			NONE	E	S	15	1	0-3 ft		removing hammer from n-33
8/7/2013	CON	N-33	10:04:04	10:15:49	HSEA	5	180	24	1	1	Toward	TR-NW	DI	SW-NE	NONE	G	S	0	1	0-3 ft		Preparing hammer; swam fast toward Rig 1 then dove; surfaced NE side of Rig 1 within 5 m; dist was closest dist to Rig 1; spotted heading south toward Marginal
8/7/2013	CON	NA	10:23:56	10:24:01	HSEA	100	90		1		None	SW-N	DI		NONE	E	S	10	1	0-3 ft		
8/7/2013	CON	NA	10:37:42	10:37:45	HSEA	180	115		1		None	LO			NONE	G	S	10	1	0-3 ft		
8/7/2013	CON	NA	10:52:00	11:09:41	HSEA	300	120		1		None	LO	DI		NONE	E	S	15	1	0-3 ft	SE	Moving barges in between piles
8/7/2013	CON	L-33	11:27:46	11:28:00	HSEA	120	85	170	1		Toward	SW-N			NONE	E	S	15	1	0-3 ft		prepping to vibe
8/7/2013	CON	NA	12:21:36	12:22:00	HSEA	150	90		1		None	SW-S	DI		NONE	E	S	10	1	0-3 ft		
8/7/2013	CON	J-33	12:40:01	12:44:01	HSEA	25	312	49	1	0	Toward	SW-SE	SI		NONE	G	S	0	1	0-3 ft		construction raising pile;swimming towards north west corner of rig1
8/7/2013	CON	J-33	12:41:12	12:41:33	HSEA	60	20	50	1		None	LO	SI		NONE	E	S	10	1	0-3 ft		moving pile to J-33
8/7/2013	CON	J-33	12:50:55	12:52:00	HSEA	125	70	100	1		Toward	SW-N	DI		NONE	E	S	10	1	0-3 ft		placing pile to drive
8/7/2013	CON	J-33	13:05:53	13:13:50	HSEA	250	130	300	1		None	SW-SW	DI	MI	V	E	S	10	1	0-3 ft	SE	

Date	Event Code	Pile	Start Time	End Time	Species	Dist. To animal (m)	Dir. To animal (deg)	Dist to pile (m)	Best num of animals	Num of juv	Relative motion	Behavior 1	Behavior 2	Behavior 3	Const Type	Visi-bility	Weather	Glare (%)	BSS	Wave ht	Swell Dir	Comments
8/7/2013	CON	J-33	13:09:27	13:11:26	HSEA	12	10	40	1	1	Away	SW-NE	DI	SW-NE	V	G	S	0	1	0-3 ft		about to restart vibe activities, no mitigation; small individual; swam northeast toward southwest corner of
8/7/2013	CON	N-32	13:47:42	13:56:59	HSEA	35	180	90	1		Parallel	SW-W	DI		NONE	E	S	10	2	0-3 ft	SE	prepping to vibe
8/7/2013	CON	N-32	14:00:45	14:30:04	HSEA	300	120	300	1		None	LO	DI	SW-N	NONE	G	S	10	2	0-3 ft		prepping to vibe, believe this is the same seal as from 10
8/7/2013	CON	N-35	14:04:53	14:05:00	HSEA	300	150	300	2	1	None	TR-S			NONE	E	S	10	2	0-3 ft	SE	prepping to vibe
8/7/2013	CON	N-32	14:14:54	14:19:55	HSEA	50	180	90	1	0	Toward	SW-W	DI		NONE	G	S	0	2	0-3 ft		placing hammer on pile; sighted southwest side of rig1 and northeast side of pile baregswimming towards barge;
8/7/2013	CON	N-32	14:40:04	14:47:06	HSEA	50	100	85	1	1	Away	SW-SW	DI	SW-NE	NONE	G	S	0	2	0-3 ft		repositioning the pile
8/7/2013	CON	L-32	15:38:56	15:42:36	HSEA	12	98	52	1	1	None	SI	SW-E	SI	NONE	G	S	0	2	0-3 ft		puttung hammer on pile
8/8/2013	CON	NA	7:49:56	7:53:11	HSEA	157	150	200	1	0	Toward	SW-N	DI		NONE	G	S	0	1	0-3 ft		preparing for the day; currently they are only using 1 rig for vibe; dist to pile = dist to pile area
8/8/2013	OTHR	NA	7:58:45	8:12:40	CASL	2010	205	2100	1	0	None	HO	VO		OTHR	G	S	10	1	0-3 ft		preparing for the day; currently they are only using 1 rig for vibe; dist to pile = dist to pile area; hauled out on outside WRA fence buoy; still hauled out and occassionally vocalizing after monitoring;
8/8/2013	CON	N-31	8:14:46	8:15:47	HSEA	95	90	90	1	0	Parallel	SW-N			NONE	E	S	10	0	0-3 ft		prepping to place pile
8/8/2013	CON	N-31	8:57:06	9:05:23	HSEA	148	90	167	1	0	None	SI	SW-N		NONE	G	S	1	1	0-3 ft		hammer is on the pile; seal surfaced looked around and sank; sighted later by jason
8/8/2013	CON	N-31	9:08:13	9:42:01	HSEA	100	120	100	1	0	Toward	SW-N	DI		NONE	E	S	10	0	0-3 ft		setting up to vibe, reference Dana sighting 3 - tablet 3
8/8/2013	CON	N-31	9:42:55	9:54:02	HSEA	80	100	80	1	0	Away	SW-S	DI	LO	NONE	E	S	10	1	0-3 ft		prepping to vibe, probably the same as sighting 2
8/8/2013	CON	N-31	10:06:07	10:07:31	HSEA	90	130	95	1	0	Toward	LO	DI		NONE	E	S	10	1	0-3 ft		pile adjusting
8/8/2013	CON	N-31	10:40:59	10:41:02	HSEA	50	95	50	1	0	Away	LO	DI		V	E	S	10	1	0-3 ft		
8/8/2013	CON	NA	10:50:00	10:51:34	HSEA	280	210	280	1	0	Toward	SW-E			NONE	E	S	0	1	0-3 ft		
8/8/2013	CON	L-31	11:26:21	11:26:23	HSEA	100	75	95	1	0	Parallel	MI	DI		NONE	E	S	10	1	0-3 ft		moving piles to drive correct one

Date	Event Code	Pile	Start Time	End Time	Species	Dist. To animal (m)	Dir. To animal (deg)	Dist to pile (m)	Best num of animals	Num of juv	Relative motion	Behavior 1	Behavior 2	Behavior 3	Const Type	Visi-bility	Weather	Glare (%)	BSS	Wave ht	Swell Dir	Comments
8/8/2013	CON	NA	11:30:58	11:45:24	HSEA	12	0	63	2	1	Away	SW-SE	DI	PL	NONE	G	S	0	1	0-3 ft		moving piles around on pile barge; dist to pile area = dist to pile; cow and calf pair heading towards shoreline, once at shoreline calf was playing splashing about for about 5 minutes
8/8/2013	CON	L-31	11:53:01	11:53:35	HSEA	15	0	15	1	0	Parallel	FO	LO	DI	NONE	E	S	10	1	0-3 ft		Prepping to place pile
8/8/2013	CON	L-31	12:00:38	12:45:20	HSEA	432	100	564	2	1	None	SP	PL	DI	NONE	G	S	0	1	0-3 ft		hooking up next pile; dist to pile area = dist to pile; potentially same cow and calf pair closer to shoreline playing and milling about near the white dead snag; continued milling in same
8/8/2013	CON	L-31	12:06:58	12:08:04	HSEA	60	90	115	1	0	Toward	SI			NONE	G	S	0	1	0-3 ft		hooking up next pile; dist to pile area = dist to pile; surfaced looked toward barge and sank
8/8/2013	CON	NA	12:25:30	12:27:31	HSEA	40	200	10	1	0	Parallel	SW-E			NONE	E	S	0	1	0-3 ft		
8/8/2013	CON	L-31	12:33:14	12:41:44	HSEA	130	110	210	1	0	Away	SW-SE	DI		NONE	G	S	0	1	0-3 ft		hooked up next pile; lunch break; dist to pile area = dist to pile; changed direction at 12:40 headed southwest
8/8/2013	CON	L-31	13:01:13	13:11:59	HSEA	12	85	70	1	0	Toward	SW-NW	SI	DI	NONE	G	S	0	1	0-3 ft		stabed the pile in preparing the hammer; seal swimming close to boat within 40m; as it sank, swam toward vessel then turned toward the pile staying within 50m of
8/8/2013	CON	L-31	13:13:26	13:15:23	HSEA	76	180	145	1	0	Toward	TR-NW	DI		NONE	G	S	0	1	0-3 ft		placing hammer on pile;
8/8/2013	CON	L-31	13:30:40	13:30:55	HSEA	275	140	275	1	1	Away	TR-S			V	E	S	10	1	0-3 ft		have seen a pair in this direction every day this week, Dana probably referenced this pair
8/8/2013	CON	L-31	13:30:52	13:30:56	HSEA	270	140	270	1	1	Away	TR-S			V	E	S	10	1	0-3 ft		probably cow and calf seen by Dana, have been seeing a pair here the last few days
8/8/2013	CON	N-30	15:08:15	15:13:44	HSEA	84	45	19	1	0	Toward	SW-E	DI		NONE	G	S	0	2	0-3 ft		Stabbing pile; seal spotted less than 3m from engineer dingy boat; then resurfaced soutwest of pile barge.
8/8/2013	CON	NA	16:12:55	16:13:30	HSEA	40	240	80	1	0	None	RE			NONE	E	S	0	1	0-3 ft		
8/8/2013	CON	NA	23:49:27	23:51:28	HSEA	20	215	50	1	1	Parallel	SW-S	LO		NONE	E	S	0	1	0-3 ft		
8/9/2013	CON	TT-3	8:46:51	8:47:00	HSEA	40	35	50	1	0	Away	SW-S	DI		NONE	G	S	0	1	0-3 ft		Stabbing pile TT3

Date	Event Code	Pile	Start Time	End Time	Species	Dist. To animal (m)	Dir. To animal (deg)	Dist to pile (m)	Best num of animals	Num of juv	Relative motion	Behavior 1	Behavior 2	Behavior 3	Const Type	Visi-bility	Weather	Glare (%)	BSS	Wave ht	Swell Dir	Comments
8/9/2013	CON	TT-4	9:00:11	9:05:06	HSEA	10	25	30	1	0	Away	LO	DI		NONE	G	S	0	1	0-3 ft		picking up pile TT4
8/9/2013	CON	TT-4	9:18:27	9:18:31	HSEA	80	25	40	1	0	None	DI			NONE	G	S	0	1	0-3 ft		Hammer on TT3
8/9/2013	CON	L-31	9:44:04	9:52:47	HSEA	2	225	45	1	0	Toward	SW-E	DI	SI	NONE	E	S	5	1	0-3 ft		preparing to pull pile; swam towards rig 2,within 2m from rig, dove near rig 2 and surfaced abut 12 m from the pile area
8/9/2013	CON	NA	9:50:49	9:50:53	HSEA	10	115	60	1	0	Parallel	SW-N	DI		NONE	E	S	0	1	0-3 ft		in between piles; distance to pile area
8/9/2013	CON	NA	10:48:27	10:54:12	HSEA	200	95	250	2	0	Parallel	TR-N			NONE	E	S	0	1	0-3 ft		2 adults travelling north, continued to watch one travel north
8/9/2013	CON	N-29	11:20:41	11:20:57	HSEA	30	130	20	1	0	Away	LO	DI		NONE	E	S	0	1	0-3 ft		
8/9/2013	CON	NA	12:30:37	12:32:41	HSEA	13	90	10	1	0	Toward	SW-S	DI		NONE	E	S	5	1	0-3 ft		Crew getting back to work from lunch break; dist to pile=dist to last pile
8/9/2013	CON	L-41	13:13:31	13:14:32	HSEA	15	90	41	1	0	Away	DI			I	E	S	5	1	0-3 ft		hammer on pile
8/9/2013	CON	L-29	13:26:03	13:26:06	HSEA	200	130	200	1	0	Away	SW-S			NONE	E	S	0	1	0-3 ft		just finished vibing
8/9/2013	CON	L-29	13:37:24	13:40:41	HSEA	250	90	400	1	0	None	HO			V	E	S	5	1	0-3 ft		resting on geach log
8/9/2013	CON	J-40	14:00:56	14:01:00	HSEA	15	95	150	1	0	Away	LO	DI		I	E	S	5	2	0-3 ft		prepping to vibe and hammer, when heard the hammer it looked hesitant, started swimming away, impact hammer was 250 meters away from Rig 3
8/9/2013	CON	J-39	14:34:36	14:53:12	HSEA	4	270	15	1	0	Toward	SW-SE	DI		NONE	E	S	0	1	0-3 ft		Moving rig and rigging up next pile N-28; spotted swimming toward rig 2 dove and swam under rig; surfaced about 10 m from where the pile will be stabbed then dove again; sighted again further east closer to the shoreline
8/9/2013	CON	NA	14:40:12	14:40:30	HSEA	115	75	60	1	0	Away	LO	SW-W		NONE	E	S	5	2	0-3 ft		in between piles
8/9/2013	CON	N-28	15:00:58	15:03:05	HSEA	1	0	18	1	0	Toward	SW-S	DI		NONE	E	S	0	1	0-3 ft		Just about to vibe on Rig#2; seal dove and swam under rig; more than 18 m from pile
8/9/2013	CON	NA	16:58:28	16:58:35	HSEA	250	90	300	2	1	Away	LO	SI		NONE	E	S	5	2	0-3 ft		
8/9/2013	POST	NA	17:16:58	17:17:06	HSEA	165	85	155	1	0	Away	SW-S			NONE	E	S	5	2	0-3 ft		done with impact and vibing
8/12/2013	PRE	NA	7:51:08	7:52:09	HSEA	75	100		1	0	Away	SW-S			NONE	G	OC	0	1	0-3 ft		
8/12/2013	CON	NA	7:58:31	7:59:32	HSEA	200	105		1	0	Away	SW-S	DI		NONE	G	OC	0	1	0-3 ft		
8/12/2013	CON	NA	8:15:22	8:16:54	HSEA	300	90		1	0	Away	SW-S	DI		NONE	G	OC	0	1	0-3 ft		
8/12/2013	CON	NA	8:53:14	9:02:53	HSEA	350	100		1	0	Away	SW-S	DI	SW-N	NONE	G	OC	0	1	0-3 ft		Seems to be milling

Date	Event Code	Pile	Start Time	End Time	Species	Dist. To animal (m)	Dir. To animal (deg)	Dist to pile (m)	Best num of animals	Num of juv	Relative motion	Behavior 1	Behavior 2	Behavior 3	Const Type	Visi-bility	Weather	Glare (%)	BSS	Wave ht	Swell Dir	Comments
8/12/2013	CON	NA	8:56:29	8:56:30	HSEA	350	185		1	0	Away	SW-S			NONE	G	OC	0	1	0-3 ft		
8/12/2013	CON	D-23	9:32:45	9:34:09	HSEA	100	360	90	1	0	Toward	SW-S	SI	SW-W	NONE	E	S	0	1	0-3 ft		Stabbing pile; sighted about 50m west of EHW1; lost sight after swimming west last known approximate distance was about 146m from rig1
8/12/2013	CON	NA	9:41:03	9:44:01	HSEA	250	200		1	0	Away	SW-S	DI		NONE	G	OC	0	1	0-3 ft		
8/12/2013	CON	NA	9:59:30	9:59:46	HSEA	30	0	20	1	0	None	DI			NONE	E	S	0	1	0-3 ft		Preparing the next pile; dist to pile=dist to future pile location; seal surfaced and immediately dove
8/12/2013	CON	B-23	10:43:12	10:53:26	HSEA	6	247	87	2	1	Toward	MI	DI		NONE	E	S	0	1	0-3 ft		moving pile; surfaced briefly and dove; surfaced on northwest side of rig1 within a half a meter from rig
8/12/2013	CON	NA	10:55:40	10:55:42	HSEA	100	340		1	0		LO	SI		NONE	G	OC	0	1	0-3 ft		
8/12/2013	CON	NA	11:06:07	11:13:17	HSEA	66	60	72	1	0	Away	MI	SW-N	DI	NONE	E	S	0	1	0-3 ft		preparing hammer; surfaced and swam towards EHW1 south side
8/12/2013	CON	B-23	11:15:53	11:15:54	HSEA	50	270	250	1	0	Away	LO	SI		NONE	G	OC	0	1	0-3 ft		
8/12/2013	CON	C-23	11:32:17	11:33:43	HSEA	24	22	32	1	0	Toward	SW-SE	DI		NONE	E	S	0	1	0-3 ft		hammer is being placed on pile; swimming towards pile frame
8/12/2013	CON	C-24	13:05:40	13:06:46	HSEA	55	270	155	1	0	Away	SW-S	LO		NONE	G	S	0	1	0-3 ft		
8/12/2013	CON	C-24	13:17:29	13:20:38	HSEA	75	190	200	1	0	Away	SW-W	DI		NONE	G	S	0	1	0-3 ft		
8/12/2013	CON	B-24	13:24:10	13:24:12	HSEA	500	190	200	1	0	None	LO	SI		NONE	G	S	0	1	0-3 ft		
8/12/2013	CON	B-24	13:45:03	13:47:08	HSEA	55	15	220	1	0	Away	SW-N	SI		NONE	G	S	0	1	0-3 ft		preparing template
8/12/2013	CON	C-23	14:56:37	14:58:44	HSEA	48	88	38	1	0	Toward	SW-SE	DI		NONE	E	S	0	1	0-3 ft		lifting pile C-24 from the pile barge;
8/12/2013	CON	C-23	15:19:54	15:24:15	HSEA	23	45	18	1	0	Toward	SW-S	DI		NONE	E	S	0	1	0-3 ft		preparing to move pile number B-24; seal dove when worker walked by
8/12/2013	POST	NA	16:10:58	16:11:05	HSEA	10	195	200	2	1	None	LO	DI		NONE	G	S	0	1	0-3 ft		mom and pup
8/12/2013	OTHR	B-23	23:33:28	23:33:35	CASL	1000	195	1150	1	0	Parallel	LO	SI		OTHER	G	OC	0	1	0-3 ft		50 percent sure a casl/ hearing barking earlier
8/13/2013	CON	NA	8:25:02	8:25:12	HSEA	67	180	75	1	1	Parallel	TR-E	SI		NONE	G	OC	20	1	0-3 ft		
8/13/2013	CON	NA	9:24:24	9:25:25	HSEA	40	10	50	1	0	Toward	SW-S			NONE	E	S	0	1	0-3 ft		
8/13/2013	CON	NA	9:28:27	9:29:28	HSEA	45	20	55	1	0	Away	SW-N			NONE	E	S	0	1	0-3 ft		
8/13/2013	CON	NA	12:00:43	12:02:34	HSEA	140	100	57	1	0	Toward	SW-S	DI		NONE	E	S	5	1	0-3 ft		lunch break; dist to pile= dist to pile area

Date	Event Code	Pile	Start Time	End Time	Species	Dist. To animal (m)	Dir. To animal (deg)	Dist to pile (m)	Best num of animals	Num of juv	Relative motion	Behavior 1	Behavior 2	Behavior 3	Const Type	Visi-bility	Weather	Glare (%)	BSS	Wave ht	Swell Dir	Comments
8/13/2013	CON	TT-3	14:57:39	15:07:23	HSEA	40	200	122	1	0	None	SW-N	DI	SI	V	E	S	5	2	0-3 ft		seal surfaced and sank; spotted again by kelsey about 10 m from the pile (not vibing at that time); sank then swam south
8/13/2013	CON	NA	16:13:28	16:13:32	HSEA	65	112	80	1	0	Parallel	RE	SI		NONE	G	S	20	1	0-3 ft		
8/14/2013	CON	NA	7:46:21	7:55:27	HSEA	3	0	12	1	0	Away	SW-NW	DI		NONE	E	S	0	1	0-3 ft		Preparing frame; dist to pile=dist to frame; seal first sighted by Hans on the northwest portion of Rig 1; swam northwest away from the rig
8/14/2013	CON	NA	7:48:06	7:48:10	HSEA	20	15		1	0	None	RE	DI		NONE	E	S	0	0	0-3 ft		
8/14/2013	CON	NA	7:49:45	7:54:37	HSEA	3	0	12	1	0	Away	SW-N	DI		NONE	E	S	0	1	0-3 ft		Preparing frame; dist to pile = distance to frame; small adult seal sighted by Hans on the northwest corner of Rig 1
8/14/2013	CON	J-26	7:58:33	7:58:53	HSEA	25			1	0	Parallel	SW-N	DI		NONE	E	PC	0	0	0-3 ft		Stabbing pile
8/14/2013	CON	NA	8:08:54	8:09:10	HSEA	55	90	85	1	0	Toward	SW-W	MI		NONE	G	OC	0	1	0-3 ft		putting hammer on J-23
8/14/2013	CON	J-26	8:17:51	8:17:54	HSEA	50	350	50	1	0	Toward	SW-SW	SI		V	G	OC	0	1	0-3 ft		
8/14/2013	CON	NA	8:30:57	8:32:09	HSEA	100	90	56	1	0	Parallel	SW-S	DI		NONE	E	S	0	1	0-3 ft		welding template; dist to pile = dist to frame; swimming south under east side concreted platforms
8/14/2013	CON	X-25	9:17:40	9:17:45	HSEA	450	160	300	1	0	None	RE	SI		V	E	PC	0	0	0-3 ft		
8/14/2013	CON	V-25	10:13:26	10:13:28	HSEA	500	135	400	1	1	None	RE			NONE	E	PC	0	0	0-3 ft		
8/14/2013	CON	R-25	13:25:17	13:25:30	HSEA	120	105	75	1	0	None	SW-N			NONE	E	PC	0	0	0-3 ft		
8/14/2013	CON	NA	13:53:21	13:53:28	HSEA	30	270	60	1	0	Toward	LO	SI		NONE	G	PC	0	1	0-3 ft		
8/14/2013	CON	M-25	14:18:34	14:18:37	HSEA	300	110	200	1	0	Parallel	SW-S			NONE	E	PC	0	0	0-3 ft		
8/15/2013	PRE	NA	7:33:15	8:08:09	HSEA	50	220		1	0	None	LO	SI	SW-E	NONE	E	OC	0	1	0-3 ft		70 meters away from Rig 1 wimming around piles.
8/15/2013	CON	NA	9:35:09	9:50:16	HSEA	45	195		1	1	Toward	SW-E	DI		NONE	E	OC	0	1	0-3 ft		Seal went under rig 2
8/15/2013	CON	NA	10:09:22	10:10:27	HSEA	50	270		1	0	Parallel	LO	DI		NONE	E	OC	0	1	0-3 ft		Seal had a reddish back, large head
8/15/2013	CON	NA	10:27:57	10:35:59	HSEA	75	180		1	1	Away	SW-N			NONE	E	OC	0	1	0-3 ft		
8/15/2013	CON	NA	10:39:51	11:02:46	HSEA	25	195		1	1	Away	RE			NONE	E	OC	0	1	0-3 ft		This animal was young, observed with eyes closed.
8/15/2013	CON	NA	10:43:10	10:44:30	CASL	150	290		1	0	Parallel	FO	SW-S		NONE	E	OC	0	1	0-3 ft		
8/15/2013	CON	NA	10:46:21	10:52:01	HSEA	220	180		1	0	Parallel	SW-N			NONE	E	OC	0	1	0-3 ft		
8/15/2013	CON	NA	10:53:17	10:53:45	HSEA	200	295		1	0	None	RE			NONE	E	OC	0	1	0-3 ft		
8/15/2013	CON	NA	11:03:13	11:04:14	HSEA	100	180		1	0	None	RE			NONE	E	OC	0	1	0-3 ft		

Date	Event Code	Pile	Start Time	End Time	Species	Dist. To animal (m)	Dir. To animal (deg)	Dist to pile (m)	Best num of animals	Num of juv	Relative motion	Behavior 1	Behavior 2	Behavior 3	Const Type	Visi-bility	Weather	Glare (%)	BSS	Wave ht	Swell Dir	Comments
8/15/2013	CON	NA	11:17:51	11:18:54	HSEA	150	180	300	1	0	Toward	SW-E			NONE	E	OC	0	1	0-3 ft		
8/15/2013	CON	NA	11:21:01	11:21:10	HSEA	60	180	80	1	1	None	RE			SSI	E	OC	0	1	0-3 ft		same juvenile as sighting 5
8/15/2013	CON	X-26	11:28:34	11:28:40	HSEA	250	145	300	1	0	Parallel	SW-N			I	G	OC	0	1	0-3 ft		
8/15/2013	CON	NA	11:49:12	11:49:16	HSEA	65	335	165	1	0	Parallel	SW-S			NONE	G	OC	0	1	0-3 ft		Hammer on pile
8/15/2013	CON	NA	11:52:09	11:52:24	HSEA	100	190	65	1	1	None	RE			NONE	E	OC	0	1	0-3 ft		same juvenile,getting ready to impact another pile
8/15/2013	CON	NA	12:37:57	12:38:11	HSEA	150	160	100	1	1	None	RE			NONE	E	OC	0	1	0-3 ft		
8/15/2013	CON	NA	13:58:18	14:11:50	HSEA	200	100	300	1	0	Parallel	SW-S	DI		NONE	E	OC	0	1	0-3 ft		kelsey sighted this animal as well her sighting #3 tablet 3
8/15/2013	CON	T-25	13:59:45	13:59:51	HSEA	175	150	230	1	0	Away	SW-S			I	G	OC	0	1	0-3 ft		
8/15/2013	CON	C-26	15:32:29	15:48:01	HSEA	15	0	12	1	0	None	DI	SW-N	DI	V	E	S	0	1	0-3 ft		Just before vibe seal surfaced within a meter from pile; later resurfaced by EHW1 about 60m;
8/15/2013	POST	NA	17:09:55	17:10:50	HSEA	100	195	400	2	0	None	LO	RE		NONE	E	OC	0	1	0-3 ft		after impact
8/15/2013	POST	NA	17:14:56	17:15:40	HSEA	75	90	75	1	0	Toward	SW-SE			NONE	E	OC	0	1	0-3 ft		
8/16/2013	PRE	NA	7:25:06	7:39:26	HSEA	400	180		2	0	Toward	RE	SI		NONE	E	OC	0	1	0-3 ft		
8/16/2013	PRE	NA	7:40:26	7:41:36	HSEA	100	100	300	1	0	Parallel	RE	SI		NONE	E	OC	0	1	0-3 ft		
8/16/2013	CON	X-23	7:54:04	7:54:06	HSEA	100	80	100	1	0	Parallel	SW-N			NONE	E	OC	0	0	0-3 ft		
8/16/2013	CON	NA	8:02:18	8:02:24	HSEA	100	25	150	1	0	Parallel	SW-W			NONE	G	OC	0	1	0-3 ft		
8/16/2013	CON	NA	8:05:01	8:05:15	HSEA	85	345	25	1	0	Toward	RE			NONE	E	OC	0	1	0-3 ft		Hammer on pile X-23
8/16/2013	CON	X-24	8:05:33	8:10:25	HSEA	10	340	35	1	0	Away	SW-S	SI		V	G	OC	0	1	0-3 ft		
8/16/2013	CON	X-24	8:06:37	8:06:54	HSEA	180	95	200	1	0	Parallel	SW-N			V	G	OC	0	1	0-3 ft		
8/16/2013	CON	NA	8:49:19	8:49:20	HSEA	275	160	450	1	0	None	RE	SI		NONE	E	OC	0	1	0-3 ft		
8/16/2013	CON	V-24	8:55:53	8:55:55	HSEA	200	90	250	1	0	Away	SW-S			V	E	OC	0	1	0-3 ft		
8/16/2013	CON	V-24	8:56:21	8:56:34	HSEA	200	100	230	1	0	Away	SW-S	SI		V	G	OC	0	1	0-3 ft		
8/16/2013	CON	B-26	9:01:31	9:01:33	HSEA	200	180	375	1	0	Away	SW-S			V	E	OC	0	1	0-3 ft		
8/16/2013	CON	B-26	9:06:18	9:08:35	HSEA	18	350	16	1	0	Away	TR-NE	DI		V	E	S	0	1	0-3 ft		Seal surfaced about 18 m from nw corner of rig1;swam ene toward EHW1 and sank; stayed outside of the 10m shut-down zone
8/16/2013	OTHR	NA	10:01:28	10:15:36	CASL	900	245	1500	10	0	None	HO	RE		OTHER	E	OC	0	1	0-3 ft		Hauled out on wra fence buoys.
8/16/2013	CON	NA	10:15:38	10:16:39	HSEA	50	195	1100	1	0	Away	SW-SE	DI		NONE	E	OC	0	1	0-3 ft		animal with reddish back
8/16/2013	CON	NA	10:55:59	11:01:51	HSEA	170	110	120	1	0	Toward	SW-NW	SW-S		NONE	E	OC	0	1	0-3 ft		
8/16/2013	CON	NA	10:57:02	11:00:54	HSEA	170	110	120	1	0	Toward	SW-NW	SW-S		NONE	E	OC	0	1	0-3 ft		
8/16/2013	CON	TT-1	11:21:14	11:32:48	HSEA	23	0	31	1	0	Toward	SW-S	DI	SI	V	E	PC	0	1	0-3 ft		just about to drive; re-surfaced under the EHW1 pier and sank

Date	Event Code	Pile	Start Time	End Time	Species	Dist. To animal (m)	Dir. To animal (deg)	Dist to pile (m)	Best num of animals	Num of juv	Relative motion	Behavior 1	Behavior 2	Behavior 3	Const Type	Visi-bility	Weather	Glare (%)	BSS	Wave ht	Swell Dir	Comments
8/16/2013	CON	NA	11:31:44	11:31:45	HSEA	150	250	105	1	0	Toward	SW-NE	DI		NONE	E	OC	0	1	0-3 ft		
8/16/2013	CON	M-24	11:55:15	11:56:39	HSEA	145	90	110	1		Toward	SW-NW	SW-S		V	E	OC	0	1	0-3 ft		this animal surfaced right as started to vibe swimming toward rig, dove and surfaced 10 meters south of of where it first surfaced, swimming away from rig 2
8/16/2013	CON	M-24	12:08:59	12:09:00	CASL	200	270	110	1	0	Away	PO	LO	SW-W	V	E	OC	0	1	0-3 ft		Surfaced four times (porpoising], then surfaced with head out of water twice
8/16/2013	CON	TT-2	13:05:30	13:08:38	HSEA	2	0	12	1	1	Toward	SW-S	LO	DI	NONE	E	PC	0	1	0-3 ft		swam toward rig within 2 m and dove under rig swimming south; construction was moving framing pile
8/16/2013	CON	NA	13:08:44	13:09:48	HSEA	100	100	200	1	0	Toward	SW-N	DI		NONE	E	OC	0	1	0-3 ft		
8/16/2013	CON	TT-2	13:20:17	13:21:05	HSEA	200	180	350	1	0	Away	SW-S	DI		V	E	OC	0	1	0-3 ft		
8/16/2013	CON	TT-3	14:17:43	14:17:44	HSEA	330	180	430	1	0	Away	SW-S			V	E	OC	0	1	0-3 ft		
8/16/2013	CON	TT-4	14:45:07	14:46:27	HSEA	35	0	40	1	0	Toward	SW-S	DI		NONE	E	PC	0	1	0-3 ft		preparing pile extraction; seal sighted about 20m sw corner of EHW1 swimming south towards the mid-north side of rig1
8/16/2013	POST	NA	15:25:37	15:26:38	HSEA	20	80		2	1	None	LO	SI		NONE	E	PC	0	1	0-3 ft		
8/19/2013	PRE	NA	7:20:01	7:20:21	HSEA	100	160		1		None	SW-N			NONE	E	OC	0	1	0-3 ft		
8/19/2013	CON	NA	7:36:23	7:36:28	HSEA	140	140		1		None	SW-N			NONE	E	OC	0	1	0-3 ft		
8/19/2013	CON	NA	7:46:27	7:46:54	HSEA	200	155		1		None	SW-N			NONE	E	OC	0	1	0-3 ft		
8/19/2013	CON	NA	7:49:32	7:50:18	HSEA	100	120		1		None	DI			NONE	E	OC	0	1	0-3 ft		
8/19/2013	CON	NA	8:14:03	8:14:21	HSEA	100	170		1		None	SW-S	DI		NONE	E	OC	0	1	0-3 ft		
8/19/2013	CON	NA	8:14:37	8:14:49	HSEA	80	140		1		None	SW-S			NONE	E	OC	0	1	0-3 ft		
8/19/2013	CON	NA	8:33:20	8:33:32	HSEA	300	160		1		None	MI			NONE	E	OC	0	1	0-3 ft		
8/19/2013	CON	NA	9:01:41	9:02:12	HSEA	85	154		1		None	SW-N	DI		NONE	E	OC	0	1	0-3 ft		
8/19/2013	CON	NA	9:10:29	9:10:55	HSEA	145	116		1		None	SW-S			NONE	E	OC	0	1	0-3 ft		
8/19/2013	CON	NA	9:19:15	9:19:37	HSEA	160	214		1		None	RE			NONE	E	PC	0	1	0-3 ft		
8/19/2013	CON	NA	9:20:01	9:20:23	HSEA	50	106		1		None	LO	DI		NONE	E	PC	0	1	0-3 ft		
8/19/2013	CON	NA	9:20:51	9:22:52	HSEA	43	90		1	0	Toward	TR-S	DI		NONE	E	PC	0	1	0-3 ft		Preparing frame; seal was sighted from the northeast side of Rig 1 swimming south toward Rig 1.
8/19/2013	CON	NA	9:34:11	9:34:18	HSEA	48	180		1		None	DI			NONE	E	PC	0	1	0-3 ft		

Date	Event Code	Pile	Start Time	End Time	Species	Dist. To animal (m)	Dir. To animal (deg)	Dist to pile (m)	Best num of animals	Num of juv	Relative motion	Behavior 1	Behavior 2	Behavior 3	Const Type	Visi-bility	Weather	Glare (%)	BSS	Wave ht	Swell Dir	Comments
8/19/2013	CON	NA	9:36:26	9:36:36	HSEA	55	180		1		None	LO	DI		NONE	E	PC	0	1	0-3 ft		
8/19/2013	CON	NA	9:42:56	9:43:01	HSEA	130	100		1		None	SW-N			NONE	E	PC	10	1	0-3 ft		
8/19/2013	CON	NA	9:43:35	9:49:30	HSEA	95	90	146	1	1	Away	SW-S	SI	MI	NONE	E	PC	0	1	0-3 ft		taking morning break; seal is milling between EHW1 and EHW2 (east side about 50 m from shoreline; dist to pile=dist to future pile location
8/19/2013	CON	NA	9:53:35	9:54:48	HSEA	120	140		1		None	MI	SW-S	DI	NONE	E	PC	10	1	0-3 ft		
8/19/2013	CON	NA	9:59:10	10:03:07	HSEA	26	315		1	1	Parallel	SW-N	DI	LO	NONE	E	S	0	1	0-3 ft		Still on break; seal sighted swimming on the west side of rig1 just ob the inside of the western most piles; surfaced about 27 m from nw corner of rig1 and
8/19/2013	CON	NA	9:59:35	9:59:51	HSEA	170	120		1		None	RE			NONE	E	PC	10	1	0-3 ft		
8/19/2013	CON	NA	10:04:06	10:04:37	HSEA	180	150		1		None	SW-S			NONE	E	PC	10	1	0-3 ft		
8/19/2013	CON	NA	10:06:28	10:06:54	HSEA	90	110		1		None	RE			NONE	E	PC	10	1	0-3 ft		
8/19/2013	CON	NA	10:18:26	10:18:46	HSEA	60	45	40	2	1	Toward	SW-W	SW-S	DI	NONE	E	S	0	1	0-3 ft		Hooking pile X-23
8/19/2013	CON	NA	10:19:47	10:19:53	HSEA	80	150		1		Parallel	RE			NONE	G	PC	10	1	0-3 ft		
8/19/2013	CON	NA	10:26:43	10:27:30	HSEA	116	136		1		None	SW-N			NONE	G	PC	10	1	0-3 ft		
8/19/2013	CON	NA	10:27:33	10:28:42	HSEA	200	190		1		Toward	RE			NONE	G	PC	10	1	0-3 ft		
8/19/2013	CON	NA	10:29:17	10:29:25	HSEA	130	154	10	1		Toward	SW-N			NONE	G	PC	10	1	0-3 ft		
8/19/2013	CON	NA	10:34:11	10:34:30	HSEA	375	170		1		Away	SW-SW			NONE	G	PC	10	1	0-3 ft		
8/19/2013	CON	TT-1	10:37:46	10:38:11	HSEA	30	90	65	1	1	Toward	SW-W	DI		V	E	S	0	1	0-3 ft		Hammer on X-23
8/19/2013	CON	NA	10:46:00	10:46:22	HSEA	90	120	20	1		Away	SW-N			NONE	G	PC	10	1	0-3 ft		
8/19/2013	CON	X-23	10:54:08	10:54:47	HSEA	380	180	320	1		None	MI	DI	MI	V	G	PC	10	1	0-3 ft		
8/19/2013	CON	NA	11:04:08	11:04:36	HSEA	400	235		1		None	RE			NONE	G	PC	10	1	0-3 ft		
8/19/2013	CON	X-23	11:04:18	11:04:20	HSEA	25	45	5	1	1	Toward	DI			NONE	E	S	5	1	0-3 ft		
8/19/2013	CON	NA	11:07:03	11:07:12	HSEA	400	160		2	1	None	RE			NONE	G	PC	10	1	0-3 ft		
8/19/2013	CON	NA	11:13:44	11:14:52	HSEA	70	95		1		None	MI			NONE	G	PC	10	1	0-3 ft		
8/19/2013	CON	V-23	11:34:47	11:38:20	HSEA	35	80	85	1	1	Parallel	SW-N			V	E	S	0	1	0-3 ft		
8/19/2013	CON	V-23	11:36:23	11:36:40	HSEA	30	35	140	1		None	RE			V	G	PC	10	1	0-3 ft		
8/19/2013	CON	V-23	11:38:09	11:38:12	HSEA	50	5	55	1	1	Toward	DI			V	E	S	20	1	0-3 ft		
8/19/2013	CON	V-23	11:39:53	11:40:54	HSEA	75	100	60	1		Away	SW-N			V	G	PC	10	1	0-3 ft		
8/19/2013	CON	V-23	11:40:22	11:40:25	HSEA	70	330	80	1	0	Parallel	DI			V	E	S	0	1	0-3 ft		

Date	Event Code	Pile	Start Time	End Time	Species	Dist. To animal (m)	Dir. To animal (deg)	Dist to pile (m)	Best num of animals	Num of juv	Relative motion	Behavior 1	Behavior 2	Behavior 3	Const Type	Visi-bility	Weather	Glare (%)	BSS	Wave ht	Swell Dir	Comments
8/19/2013	CON	V-23	11:43:34	11:46:05	HSEA	60	10	70	1	1	Away	UN			V	E	S	0	1	0-3 ft		Circling piles closest to shore,behavior included bending of the back upward then lifting the head out of the water,repeated this sequence many times with a splash of the water on the dive down.
8/19/2013	CON	V-23	11:43:57	11:44:16	HSEA	180	88	110	1		Parallel	SW-E			V	G	PC	10	1	0-3 ft		
8/19/2013	CON	V-23	11:47:49	11:53:18	HSEA	30	330	20	1	1	Toward	UN	PL		V	E	S	0	1	0-3 ft		Circling piles closest to shore, swam 15 meters to the pile then swam east away from vibing. Behavior included bending of the back upward then lifting the head out of the water, repeated this sequence many times with a splash of the water to dive down.
8/19/2013	CON	V-23	11:53:37	11:54:28	HSEA	175	120	65	1		None	RE	FO		V	G	PC	10	1	0-3 ft		
8/19/2013	CON	TT-2	12:30:08	12:33:24	HSEA	4	0	15	1	1	Away	LO	DI		NONE	E	S	0	1	0-3 ft		During vibe; surfaced 15m from pile and 4 m from observer; blinked then dove; fish were sighted jumping near seal
8/19/2013	CON	NA	13:10:29	13:11:13	HSEA	45	350	30	1	0	Away	SW-W	LO	DI	NONE	E	S	0	1	0-3 ft		
8/19/2013	CON	NA	13:12:08	13:12:13	HSEA	20	50	10	1	1	None	RE			NONE	E	S	0	1	0-3 ft		
8/19/2013	CON	V-23	13:13:10	13:13:15	HSEA	300	150	280	1		Toward	SW-N			NONE	G	PC	10	1	0-3 ft		
8/19/2013	CON	TT-3	13:20:00	13:21:44	HSEA	35	340	50	1	0	Toward	SW-E			NONE	E	S	0	1	0-3 ft		
8/19/2013	CON	TT-3	13:20:59	13:21:23	HSEA	90	120	80	1	1	None	MI	SW-S		V	G	S	10	1	0-3 ft		
8/19/2013	CON	TT-3	13:27:28	13:31:00	HSEA	82	100	60	1	1	None	MI			NONE	G	S	10	1	0-3 ft		
8/19/2013	CON	TT-3	13:34:58	13:39:15	HSEA	80	80	50	1	1	None	UN			V	G	S	10	1	0-3 ft		pup rubbing nose and sides against pile
8/19/2013	CON	TT-3	13:37:18	13:37:24	HSEA	105	80	45	1		None	RE			V	G	S	10	1	0-3 ft		likely mother of pup in obs 31.2
8/19/2013	CON	TT-3	13:44:44	13:44:47	HSEA	20	270	40	1	0	Away	SW-W	DI		NONE	E	S	0	1	0-3 ft		
8/19/2013	CON	TT-3	13:50:00	13:50:26	HSEA	90	200	150	1	0	None	RE	DI		V	E	S	0	1	0-3 ft		
8/19/2013	CON	TT-3	13:50:20	13:56:00	HSEA	80	78	40	1	1	None	MI			V	G	S	10	1	0-3 ft		
8/19/2013	CON	NA	13:53:15	13:53:44	HSEA	40	290	60	1	0	Toward	SW-E	DI		NONE	E	S	0	1	0-3 ft		
8/19/2013	CON	T-23	14:01:10	14:01:21	HSEA	40	200	35	1	0	None	RE			NONE	E	S	20	1	0-3 ft		
8/19/2013	CON	TT-4	14:03:13	15:43:00	HSEA	105	68	30	1	1	None	MI	RE		V	G	PC	10	1	0-3 ft		pup staying very close to piles, moving from pile to pile.
8/19/2013	CON	NA	14:41:26	14:41:53	HSEA	30	78	70	1		None	LO	SI		NONE	G	PC	10	1	0-3 ft		
8/19/2013	CON	NA	15:32:24	15:32:29	HSEA	76	90	70	1		None	SW-S			NONE	G	PC	10	1	0-3 ft		

Date	Event Code	Pile	Start Time	End Time	Species	Dist. To animal (m)	Dir. To animal (deg)	Dist to pile (m)	Best num of animals	Num of juv	Relative motion	Behavior 1	Behavior 2	Behavior 3	Const Type	Visi-bility	Weather	Glare (%)	BSS	Wave ht	Swell Dir	Comments
8/19/2013	CON	M-23	15:52:53	16:12:41	HSEA	107	52	160	1	1	None	MI			V	G	OC	10	2	0-3 ft		Pup moved to northern most row of piles
8/19/2013	CON	M-23	15:55:09	17:58:29	HSEA	250	80	270	1	0	Away	SW-N	SI		V	E	OC	0	1	0-3 ft		
8/19/2013	CON	J-23	16:57:05	16:57:24	HSEA	80	10	90	1	0	Away	SW-E	SI		V	E	OC	0	1	0-3 ft		
8/19/2013	POST		17:17:29	17:17:33	HSEA	187	120		1		None	SW-S			NONE	G	OC		1	0-3 ft		
8/19/2013	POST		17:29:54	17:30:00	HSEA	200	120		1		None	SW-S			NONE	G	OC	10	1	0-3 ft		
8/20/2013	CON	NA	8:05:34	8:05:42	HSEA	80	90	40	1	0	Parallel	SW-S			NONE	G	S	10	1	0-3 ft		
8/20/2013	CON	B-27	8:10:14	8:14:51	HSEA	23	270	40	1	1	Parallel	LO	DI		NONE	E	S	0	1	0-3 ft		putting hammer on pile; 08:21 mammal security boat passed by within 50 m of pile; looked and dove
8/20/2013	CON	B-27	8:30:15	8:30:21	HSEA	125	148	150	1	0	Away	SW-S			V	G	S	10	1	0-3 ft		
8/20/2013	CON	D-27	9:18:21	9:20:45	HSEA	40	160	60	2	1	Parallel	SW-S			V	G	S	10	1	0-3 ft		Hammer on X-24
8/20/2013	CON	NA	10:08:21	10:11:50	HSEA	10	0	24	1	1	None	RE	LO	DI	NONE	E	S	0	1	0-3 ft		Preparing template for pile C-27; milling around pile C-25 (within 3 feet of pile)
8/20/2013	CON	V-23	10:09:48	10:09:52	HSEA	20	20	80	1	0	None	DI			I	G	S	10	1	0-3 ft		
8/20/2013	CON	V-23	10:17:54	10:17:57	HSEA	85	90	100	1	0		SW-S	DI		I	G	S	10	1	0-3 ft		
8/20/2013	CON	V-23	10:21:07	10:21:35	HSEA	180	150	220	1	0	Away	SW-S	SI		I	G	S	10	1	0-3 ft		
8/20/2013	CON	V-24	10:57:06	10:57:26	HSEA	40	340	150	1	1	Away	SW-S	LO		I	G	S	10	1	0-3 ft		
8/20/2013	CON	NA	13:07:50	13:08:12	HSEA	10	337	5	1	0	Away	TR-NW			NONE	E	S	0	2	0-3 ft		Fast swimming surfaced and quickly continued course
8/20/2013	CON	NA	13:13:20	13:13:24	HSEA	90	100	120	1	0	Parallel	SW-N	SI		NONE	G	S	10	1	0-3 ft		
8/20/2013	CON	T-24	13:20:47	13:55:02	HSEA	49	315	70	1	1	None	LO	RE	UN	I	E	S	0	2	0-3 ft		potentially the same seal as yesterday (potential neonate); same behavior as 8/19/13 nuzzling the piles; arching back out of water; resting; remained in general area even during pile driving (R-23), and vessel activity; dist to pile= dist to B-27
8/20/2013	CON	NA	13:36:31	13:36:36	HSEA	75	160	100	1	0	Away	RE	DI		NONE	G	S	10	1	0-3 ft		Hammer on pile R-23
8/20/2013	CON	R-23	13:40:16	13:40:24	HSEA	60	170	200	1	0	Away	SW-S			I	G	S	10	1	0-3 ft		
8/20/2013	CON	NA	13:54:07	13:54:11	HSEA	30	50	60	1	1	Toward	LO			NONE	G	S	10	1	0-3 ft		Hammer on pile R-24
8/20/2013	CON	R-24	13:55:03	14:12:09	HSEA	5	157	90	1	1	None	MI	LO	VO	I	E	S	0	2	0-3 ft		observed from Butch Gibson (about 5 mwest of rig 1); yoy vocalized immediately as soon as impacting began about 3 times as it surfaced; yoy came within 2 feet from the tied up tug
8/20/2013	CON	R-24	14:00:32	14:00:47	HSEA	45	15	115	1	0	Away	SW-NE	DI		I	G	S	10	1	0-3 ft		
8/20/2013	CON	R-24	14:01:33	14:01:54	HSEA	75	20	100	1	1	None	FL	LO		I	G	S	10	1	0-3 ft		
8/20/2013	CON	R-24	14:06:19	14:08:12	HSEA	50	350	130	1	1	None	RE			I	G	S	10	1	0-3 ft		Same pup sighting 4 tablet . Resting against stern of tug

Date	Event Code	Pile	Start Time	End Time	Species	Dist. To animal (m)	Dir. To animal (deg)	Dist to pile (m)	Best num of animals	Num of juv	Relative motion	Behavior 1	Behavior 2	Behavior 3	Const Type	Visi-bility	Weather	Glare (%)	BSS	Wave ht	Swell Dir	Comments
8/20/2013	CON	NA	14:16:32	14:16:44	HSEA	45	270	60	1	0	None	LO	SI		NONE	G	S	10	1	0-3 ft		Hammer moving off R-24
8/20/2013	CON	M-23	14:34:52	15:23:44	HSEA	40	340	16	1	1	None	DI	LO	MI	NONE	E	S	0	2	0-3 ft		Sighting from NW corner of Rig 1; moved north of Rig 1 nudging pile (40 m from nw corner of rig1, farthest groupings of piles); dist to pile= dist to planned base pile location;
8/20/2013	CON	J-23	15:14:08	15:15:26	HSEA	130	140	180	1	0	Away	SW-SE	DI		I	G	S	10	1	0-3 ft		
8/20/2013	CON	NA	15:28:54	15:28:59	HSEA	90	70	120	1	0	Away	SW-N	DI		NONE	G	S	10	1	0-3 ft		Hammer on pile J-24
8/20/2013	CON	BB-1	15:40:32	16:10:19	HSEA	38	90	30	1	1	Away	LO	MI	UN	V	E	S	0	2	0-3 ft		moved furher east still nuzzling the piles; surfaced and nuzzling D-24; a second seal entered area at 15:50; yoy was barrel rolling when
8/20/2013	CON	BB-1	15:50:57	15:53:58	HSEA	45	90	70	1	0	None	LO	DI		V	E	S	0	2	0-3 ft		surfaced and dove; yoy now nuzzling B-24
8/20/2013	POST	NA	16:10:20	16:40:45	HSEA	5	0	2	1	1	None	RE	UN		NONE	E	S	0	2	0-3 ft		Juvenile sleeping, nuzzling piles. Behavior continued into post monitoring.
8/20/2013	POST	NA	16:10:20	16:36:06	HSEA	12	67	15	1	1	None	LO	SI		NONE	E	S	0	2	0-3 ft		Surfaced, looked then sank; dist to pile= dist to pile area
8/21/2013	CON	NA	8:23:51	8:26:41	HSEA	59	22	176	1	0	None	LO	SI		NONE	E	S	0	2	0-3 ft		sighted nw of the pile field
8/21/2013	CON	X-22	9:34:40	9:41:22	HSEA	106	160	207	2	0	None	LO	DI	SW-SE	NONE	E	S	10	1	0-3 ft		about 20 m from southeast most pile heading towards marginal pier
8/21/2013	CON	J-23	9:55:16	9:55:30	HSEA	45	342	130	1	0	Away	LO	DI		SSI	E	S	10	1	0-3 ft		sighted about 15 m from nw most bouy; location of seal 47.75300 122.72529 (wp 98 gps 4)
8/21/2013	CON	B-22	10:36:44	10:36:45	HSEA	162	90	135	1	0	None	LO	DI	MI	NONE	E	S	10	1	0-3 ft		47.75233 122.72575 vessel location; preparing pile for impact; under survey platform
8/21/2013	CON	B-22	10:37:32	10:42:32	HSEA	60	160	26	1	1	None	LO	DI		NONE	E	S	10	1	0-3 ft		small seal surfaced about 23m from pile near bubble curtain; 47.75233 122.72575 vessel location; preparing pile for impact
8/21/2013	CON	V-22	11:11:46	11:12:47	HSEA	78	90	123	1	0	None	DI			V	E	S	10	1	0-3 ft		
8/21/2013	CON	NA	11:30:52	11:31:13	HSEA	120	90	210	1	0	None	LO	DI		NONE	E	S	10	1	0-3 ft		vessel location at sighting= 47.75043 122.72512
8/21/2013	CON	T-22	11:52:47	11:56:28	HSEA	53	275	65	1	1	None	RE	SI		V	E	S	10	2	0-3 ft		vessel location 47.75261 122.72434
8/21/2013	CON	NA	12:28:34	12:30:13	HSEA	4	205	83	1	1	None	LO	DI		NONE	G	S	10	1	0-3 ft		Seal surfaced within 4m from sw corner of rig 1
8/21/2013	CON	NA	12:48:52	12:52:21	HSEA	87	275	80	1	0	Toward	TR-NE	DI		NONE	G	S	10	1	0-3 ft		dist to pile = dist to pile B-22; sighted from nw corner of rig1

Date	Event Code	Pile	Start Time	End Time	Species	Dist. To animal (m)	Dir. To animal (deg)	Dist to pile (m)	Best num of animals	Num of juv	Relative motion	Behavior 1	Behavior 2	Behavior 3	Const Type	Visi-bility	Weather	Glare (%)	BSS	Wave ht	Swell Dir	Comments
8/21/2013	OTHR	T-22	13:17:45	13:19:43	CASL	1400	220	1500	1	0	None	HO	VO		OTHER	E	S	10	2	0-3 ft		Best count of casl on wra fence at this time. Preparing a pile to vibe
8/21/2013	CON	NA	13:49:33	13:52:52	HSEA	12	0	12	1	1	Toward	LO	SW-S	DI	NONE	G	S	10	1	0-3 ft		sighted from 30 m from nw corner of rig1; dist to pile= dist to where pile
8/21/2013	CON	R-22	13:59:32	13:59:40	HSEA	85	200	50	1	0	Away	LO	SI		NONE	E	S	10	2	0-3 ft		
8/21/2013	CON	R-22	14:41:04	14:41:39	HSEA	40	270	100	1	0	Toward	SW-E	LO	SW-N	NONE	E	S	10	2	0-3 ft		dived approaching observor/vessel
8/21/2013	CON	M-22	15:12:36	15:14:37	HSEA	100	340	120	1	0	Parallel	SW-W	DI		V	G	S	10	1	0-3 ft		spotted seal from ne corner of rig1; swam toward ne corner of the 999 rig about 50m from
8/21/2013	CON	J-22	16:03:40	16:03:42	HSEA	350	180	300	1	0	Toward	LO	SI		V	E	S	30	2	0-3 ft		
8/22/2013	PRE	NA	7:08:58	7:15:00	HSEA	73	182	112	1	0	None	LO	DI		NONE	E	S	10	1	0-3 ft		vessel location 47.75178, 122.72506, dist to pile = dist to where pile will be staked; observed through pre monitoring; seal was sighted about 8 m west of B-1
8/22/2013	CON	NA	7:15:00	7:18:31	HSEA	73	182	112	1	0	None	LO	DI		NONE	E	S	10	1	0-3 ft		vessel location 47.75178, 122.72506, dist to pile = dist to where pile will be staked; observed through pre monitoring
8/22/2013	CON	V-21	8:40:00	8:49:52	HSEA	115	90	87	1	0	Away	TR-N	DI		NONE	E	S	25	1	0-3 ft		sighted swimming north; crew was preparing the hammer for vibe
8/22/2013	CON	T-21	9:20:17	9:23:03	HSEA	50	90	50	1	0	Toward	SW-S	LO	SW-N	NONE	E	S	25	1	0-3 ft		preparing pile for stabbing; sighted seal swimming toward rig 1, stopped looked, and when the pile was being positioned, headed north and dove; dist to pile = dist to where pile is being
8/22/2013	CON	NA	9:58:01	9:58:25	HSEA	250	170	270	1	0	Parallel	SW-N			NONE	G	S	0	1	0-3 ft		
8/22/2013	CON	T-21	10:02:56	10:03:27	HSEA	200	100	230	1	0	Away	SW-S			V	G	S	0	1	0-3 ft		
8/22/2013	CON	NA	10:15:23	10:18:13	HSEA	53	60	93	1	0	None	LO	MI	SI	NONE	E	S	25	0	0-3 ft		morning break; dist to pile= dist to where the next pile will be stabbed
8/22/2013	CON	NA	10:23:31	10:25:32	HSEA	55	115	5	1	0	Away	SW-N	DI		NONE	E	S	5	0	0-3 ft		Still on break; seal spotted 5m from where pile will be stabbed= dist from pile
8/22/2013	CON	R-21	10:57:58	10:59:30	HSEA	53	95	30	1	0	None	LO	DI		NONE	E	S	5	0	0-3 ft		putting hammer on pile; surfaced, looked, and dove
8/22/2013	CON	M-21	11:29:03	11:33:16	HSEA	145	88	124	1	0	Away	DI	SW-N	DI	NONE	E	S	5	0	0-3 ft		moving pile; dist to pile=dist to where pile will be stabbed

Date	Event Code	Pile	Start Time	End Time	Species	Dist. To animal (m)	Dir. To animal (deg)	Dist to pile (m)	Best num of animals	Num of juv	Relative motion	Behavior 1	Behavior 2	Behavior 3	Const Type	Visi-bility	Weather	Glare (%)	BSS	Wave ht	Swell Dir	Comments
8/22/2013	CON	M-21	11:34:12	11:43:58	HSEA	12	125	25	1	1	Away	DI	LO	SI	NONE	E	S	5	0	0-3 ft		stabbing pile; appears to have an orange mark on ventral side; still hanging around rig 1 north side within 4-12 m at 11:43 (placing hammer on pile)
8/22/2013	CON	NA	11:42:02	11:42:08	HSEA	125	190	135	1	0	None	LO	DI		NONE	G	PC	0	1	0-3 ft		Unhooking pile
8/22/2013	CON	M-21	11:46:06	11:48:16	HSEA	12	180	25	3	1	None	LO	DI		NONE	E	PC	5	0	0-3 ft		just about to start vibing; 3 seals sighted at once about 20-30 m from each other; 1 seal dove within 5 m from green pile barge next to rig 1; 1 seal closest to vessel sank; 1 seal next to T-22;
8/22/2013	CON	M-21	11:50:52	11:51:00	HSEA	30	110	60	1	1	Parallel	LO	DI		V	G	PC	0	1	0-3 ft		
8/22/2013	CON	M-21	11:53:07	11:53:41	HSEA	30	45	50	1	1		SW-N	LO	DI	V	G	PC	0	1	0-3 ft		
8/22/2013	CON	J-21	12:14:00	12:15:20	HSEA	235	90	200	1	0	Parallel	SW-S	DI		NONE	E	PC	5	0	0-3 ft		moving pile into position; swimming along shoreline under surveyor stand
8/22/2013	CON	NA	12:17:56	12:18:03	HSEA	40	330	60	1	0	None	LO	SI		NONE	G	PC	0	1	0-3 ft		
8/22/2013	CON	NA	13:59:00	14:01:12	HSEA	53	97	21	1	0	Toward	SW-S	DI		NONE	E	PC	5	1	0-3 ft		Hooking up next pile; dist to pile= dist to template
8/22/2013	CON	X-20	14:15:00	14:30:12	HSEA	48	180	75	1	1	Parallel	SW-NW	DI	MI	NONE	E	PC	5	1	0-3 ft		preparing to stab pile; swimming toward vessel (still tied up at pile B-22); at 14:19 surfaced further southeast milling around the shoreline near the white snag; at14:29 seal moved further west closer to piles in row 1
8/22/2013	CON	X-20	14:33:34	14:35:52	HSEA	428	170	450	1	1	Away	SW-S	DI		V	E	PC	5	1	0-3 ft		potentially same individual as previous swimming south along shoreline towards marginal during vibe
8/22/2013	CON	X-20	14:35:09	14:35:32	HSEA	100	150	130	1	0	Parallel	SW-N	DI		V	G	PC	0	1	0-3 ft		
8/22/2013	CON	X-20	14:39:21	14:39:38	HSEA	80	20	90	1	0	Away	SW-NW	LO	SI	V	G	PC	0	1	0-3 ft		
8/22/2013	CON	V-20	14:46:27	14:49:35	HSEA	8	190	50	1	1	None	FO	SI	LO	NONE	E	PC	5	1	0-3 ft		preparing pile for hook-up; dist to pile=dist to template; seal sighted about 8 m from vessel eating a salmon resurfaced about 12 m south of vessel looking at the west face of rig 1
8/22/2013	CON	V-20	15:12:31	15:15:48	HSEA	70	120	22	1	1	Away	SW-S	DI		NONE	E	PC	5	1	0-3 ft		Hammer placed on pile; seal sighted on the west face of Rig 1 swam south and dove under west end of green pile barge; brown/orange patch on left dorsolateral side

Date	Event Code	Pile	Start Time	End Time	Species	Dist. To animal (m)	Dir. To animal (deg)	Dist to pile (m)	Best num of animals	Num of juv	Relative motion	Behavior 1	Behavior 2	Behavior 3	Const Type	Visi-bility	Weather	Glare (%)	BSS	Wave ht	Swell Dir	Comments
8/22/2013	CON	V-20	15:17:53	15:19:57	HSEA	40	180	57	1	1	None	LO	DI		V	E	PC	5	1	0-3 ft		potentially same individual same brown spot; vibing
8/22/2013	CON	T-20	15:30:31	15:33:06	HSEA	397	162	308	2	1	None	LO	MI		NONE	E	PC	5	1	0-3 ft		preparing pile and template; dist to pile= dist to template; milling around shoreline near white snag
8/22/2013	CON	NA	15:45:01	15:45:19	HSEA	15	190	50	1	1	Parallel	RE	SI		NONE	G	OC	0	1	0-3 ft		About to stab pile T-20
8/22/2013	CON	T-20	15:49:45	15:53:46	HSEA	6	165	60	2	2	None	MI	LO	RE	NONE	E	PC	5	1	0-3 ft		preparing hammer for vibe; 2 seals possibly juveniles, 1 splashing and vocalizing to the other after resting at the surface; smaller one pointed its nose in the air and vocalized a second time shaking its head in the
8/22/2013	CON	T-20	16:01:32	16:01:39	HSEA	70	100	100	1	0	Parallel	SW-N	DI		V	G	PC	0	1	0-3 ft		
8/22/2013	CON	T-20	16:03:35	16:04:09	HSEA	416	120	378	2	1	None	MI	LO	DI	V	E	PC	5	1	0-3 ft		sighted during vibe along shoreline near white snag; later picked up by Kelsey; pacing north to south
8/22/2013	CON	NA	16:06:28	16:06:43	HSEA	10	80	30	1	0	Toward	SW-SW			NONE	G	PC	0	1	0-3 ft		Sighting 11 tablet 2
8/22/2013	CON	T-20	16:06:56	16:07:29	HSEA	83	150	80	1	0	Away	LO	DI		V	E	PC	5	1	0-3 ft		
8/22/2013	CON	T-20	16:07:20	16:07:45	HSEA	90	160	120	2	0	Away	SW-S			NONE	G	PC	0	1	0-3 ft		And 8.1 sighting
8/26/2013	PRE	NA	7:19:25	7:22:46	HSEA	60	190		5	0	None	LO	SP	SI	NONE	E	PC	5	1	0-3 ft		Observed 5 seals up at once near Marginal Pier.
8/26/2013	PRE	NA	7:24:13	7:25:32	HSEA	250	90		2	0	None	LO	SI		NONE	E	PC	5	1	0-3 ft		
8/26/2013	OTHR	NA	8:13:11	8:15:24	CASL	1350	230		9	0	None	HO			OTHER	E	PC	5	1	0-3 ft		Verified count at 9:03, approached fence to 75 meters away
8/26/2013	CON	NA	8:15:27	8:15:28	HSEA	50	350		1	0	Toward	SI			NONE	E	PC	5	1	0-3 ft		
8/26/2013	CON	NA	8:35:25	8:35:43	HSEA	130	270		1	0	Toward	SW-S	LO	SI	NONE	E	PC	5	1	0-3 ft		
8/26/2013	CON	NA	8:38:34	8:40:31	HSEA	150	0		1	0	Toward	SW-E			NONE	E	PC	5	1	0-3 ft		
8/26/2013	CON	NA	8:42:59	8:43:06	HSEA	150	0		1	0	Away	SW-N			NONE	E	PC	5	1	0-3 ft		
8/26/2013	CON	NA	9:28:22	9:28:32	HSEA	300	180		1	0	Away	SW-S			NONE	E	PC	5	1	0-3 ft		
8/26/2013	CON	NA	9:36:42	9:36:43	HSEA	40	292		1	1	Toward	LO	SI		NONE	E	PC	5	1	0-3 ft		
8/26/2013	CON	NA	10:10:24	10:11:30	HSEA	50	90		1	1	Parallel	LO	SI	SW-SE	NONE	E	PC	5	1	0-3 ft		
8/26/2013	CON	NA	10:22:37	10:24:09	HSEA	220	180		1	0	None	SW-S	SP		NONE	E	PC	5	1	0-3 ft		Fast swim back and forth, splashing. Possibly foraging
8/26/2013	CON	NA	10:36:09	10:36:18	HSEA	80	270		1	0	Toward	LO	SI		NONE	E	PC	5	1	0-3 ft		
8/26/2013	CON	NA	11:00:29	11:03:33	HSEA	275	160		1	0	Away	SW-S	LO		NONE	E	PC	5	1	0-3 ft		

Date	Event Code	Pile	Start Time	End Time	Species	Dist. To animal (m)	Dir. To animal (deg)	Dist to pile (m)	Best num of animals	Num of juv	Relative motion	Behavior 1	Behavior 2	Behavior 3	Const Type	Visi-bility	Weather	Glare (%)	BSS	Wave ht	Swell Dir	Comments
8/26/2013	CON	X-22	13:09:32	16:52:36	HSEA	285	195	420	1	0	None	HO	RE		I	E	PC	5	2	0-3 ft		very large 5-6feet, reddish. Have possibly observed this one before. Hauled out on dock near marginal pier. Observed throughout pile impacting. Piles are X-22. X-21, V-21; T-21, T-22, R-21, R-22, M-21. M-22. J-21, J-22. Lifted head often when impacting
8/26/2013	CON	NA	13:25:56	13:25:59	HSEA	30	20	30	1	1	None	LO	DI		NONE	E	PC	0	2	0-3 ft		
8/26/2013	CON	X-21	13:29:47	13:41:59	HSEA	285	195	420	1	0	None	HO			I	E	PC	5	1	0-3 ft		ignore times, refer to initial sighting. Just after impact the two Hass boats docked and blocked view
8/26/2013	CON	X-21	13:32:50	13:32:51	HSEA	50	337	100	1	0	Away	SW-N			I	E	PC	5	2	0-3 ft		
8/26/2013	CON	X-21	13:38:50	13:39:00	HSEA	50	350	110	1	0	None	SI			I	E	PC	5	2	0-3 ft		just was floating with head out of the water [no eyes or nose visible], 10 seconds, then sank
8/26/2013	CON	V-21	14:01:09	14:01:12	HSEA	50	195	90	1	0	None	SI			I	E	PC	5	2	0-3 ft		
8/26/2013	CON	T-22	14:37:51	14:37:56	HSEA	10	350	62	1	0	None	DI			I	E	PC	5	2	0-3 ft		
8/26/2013	CON	R-22	15:09:15	15:09:16	HSEA	25	145	220	1	0	None	SI			NONE	E	PC	5	2	0-3 ft		Nose up in air, then did a twirl and sank
8/26/2013	CON	j-22	16:46:16	16:46:17	HSEA	20	180	90	1	0	Toward	DI			NONE	E	PC	5	1	0-3 ft		
8/26/2013	CON	J-22	16:52:59	16:53:22	HSEA	60	85	90	1	1	None	SW-N	LO	DI	I	G	L	0	1	0-3 ft		
8/26/2013	POST	j-22	17:03:21	17:03:31	HSEA	50	270	100	1	0	Away	SW-SE			NONE	E	PC	5	1	0-3 ft		
8/26/2013	POST	j-22	17:21:46	17:21:47	HSEA	50	180	100	1	0	Toward	DI			NONE	E	PC	5	1	0-3 ft		
8/26/2013	POST	j-22	17:22:42	17:22:29	HSEA	50	180	400	1	0	Parallel	LO	DI		NONE	E	PC	5	1	0-3 ft		
8/27/2013	CON	M-20	9:24:38	9:25:01	HSEA	50	10	60	1	0	None	LO	SI		NONE	E	OC	0	1	0-3 ft		Hammer on pile M-20
8/27/2013	CON	M-20	9:28:02	9:28:08	HSEA	90	25	120	1	0	Away	SW-E	DI		V	G	OC	0	1	0-3 ft		
8/27/2013	CON	M-20	9:29:32	9:29:38	HSEA	20	10	50	1	0	Toward	LO	SW-SW	SI	V	G	OC	0	1	0-3 ft		
8/27/2013	CON	M-20	9:32:22	9:32:39	HSEA	50	0	150	1	0	None	LO	SI		V	E	OC	0	1	0-3 ft		May have been sighting [KAD] was seeing aproaching the rig/pile during vibe, sighting #3 at 9:29
8/27/2013	CON	NA	10:10:17	10:10:26	HSEA	30	0	130	1	1	Parallel	DI			NONE	E	OC	0	1	0-3 ft		
8/27/2013	CON	J-20	10:41:28	10:41:37	HSEA	20	45	110	1	1	None	RE	SI		V	E	OC	0	1	0-3 ft		A small pup [, with his nose up out of the water, then sank slowly
8/27/2013	CON	J-20	11:01:51	11:01:58	HSEA	25	0	125	1	0	None	LO	SI		NONE	E	OC	0	1	0-3 ft		
8/27/2013	CON	X-19	11:42:28	11:42:37	HSEA	30	90	70	1	0	Parallel	SW-N	LO		V	G	PC	0	1	0-3 ft		
8/27/2013	CON	NA	13:29:34	13:29:53	HSEA	30	45	55	1	0	Toward	LO	SW-SW	SI	NONE	G	S	0	1	0-3 ft		Hammer on pile
8/27/2013	CON	V-19	13:32:41	1:32:49	HSEA	10	90	110	1	1	None	RE	DI		V	E	OC	0	1	0-3 ft		Resting at surface, whole body. Small [2.5-3 feet]
8/27/2013	CON	NA	14:01:37	14:01:44	HSEA	120	90	60	1	0	Parallel	SW-W	DI		NONE	E	OC	0	1	0-3 ft		

Date	Event Code	Pile	Start Time	End Time	Species	Dist. To animal (m)	Dir. To animal (deg)	Dist to pile (m)	Best num of animals	Num of juv	Relative motion	Behavior 1	Behavior 2	Behavior 3	Const Type	Visi-bility	Weather	Glare (%)	BSS	Wave ht	Swell Dir	Comments
8/27/2013	CON	NA	14:05:29	14:05:57	HSEA	40	20	60	1	0	Toward	LO	SW-W	SI	NONE	G	PC	0	1	0-3 ft		Hammer on pile T-19
8/27/2013	OTHR	NA	14:45:41	14:55:45	CASL	75	220		9		None	DI	HO		OTHER	E	OC	0	1	0-3 ft		fence and outer survey
8/28/2013	PRE	NA	8:14:01	8:16:23	HSEA	50	90	100	1	0	None	LO	SI		NONE	G	PC	0	1	0-3 ft		
8/28/2013	PRE	NA	8:21:17	8:21:29	HSEA	75	105	175	1	0	Toward	SW-NW			NONE	G	PC	0	1	0-3 ft		
8/28/2013	PRE	NA	8:29:17	8:29:18	HSEA	10	250	150	1	0	None	SI			NONE	G	PC	0	1	0-3 ft		
8/28/2013	CON	V-22	8:30:53	8:30:54	HSEA	40	0	100	1	0	None	LO	SI		NONE	G	PC	0	1	0-3 ft		
8/28/2013	CON	V-22	8:43:16	8:43:40	HSEA	60	0	100	1	0	Parallel	SW-W	SI		NONE	G	PC	0	1	0-3 ft		
8/28/2013	CON	V-22	8:56:00	8:56:17	HSEA	380	160	480	1	0	Away	SW-S			I	G	PC	0	1	0-3 ft		just finished impact
8/28/2013	CON	V-22	8:57:49	8:57:54	HSEA	90	45	120	1	0	Parallel	SW-S	DI		I	E	PC	15	1	0-3 ft		
8/28/2013	CON	V-22	8:59:05	8:59:07	HSEA	70	190	110	1	0	None	LO	SI		I	G	PC	5	1	0-3 ft		
8/28/2013	CON	V-22	9:02:02	9:03:10	HSEA	20	180	65	1	0	None	LO			I	G	PC	0	1	0-3 ft		Animal was floating, whole body visible, for 10-15 seconds
8/28/2013	CON	NA	9:31:54	9:36:39	HSEA	87	0	195	1	1	None	LO	DI	RE	NONE	G	PC	0	1	0-3 ft		Pup. Nose in the air [not looking but no behavior code this, sank, surfaced a few minutes later, whole body floating, then dove
8/28/2013	CON	NA	9:46:39	9:46:46	HSEA	54	90	70	1	1	None	LO	DI		NONE	G	PC	0	1	0-3 ft		Floating at surface more than looking
8/28/2013	CON	NA	9:54:26	10:02:49	HSEA	350	135	300	1	0	Toward	SW-N	SW-S		NONE	G	PC	0	1	0-3 ft		
8/28/2013	CON	NA	9:58:53	9:59:25	HSEA	65	180	100	1	0	None	LO	SI	SW-W	NONE	G	PC	0	1	0-3 ft		
8/28/2013	CON	NA	10:06:34	10:06:46	HSEA	150	270	259	1		Parallel	SW-S			NONE	G	PC	0	1	0-3 ft		looked like something in his mouth
8/28/2013	CON	NA	10:13:22	10:14:02	HSEA	75	120	100	1	0	Toward	RE	DI		NONE	G	PC	0	1	0-3 ft		
8/28/2013	CON	NA	10:23:41	10:23:48	HSEA	305	185	405	1	0	Away	SW-S			NONE	G	PC	0	1	0-3 ft		
8/28/2013	CON	X-20	10:37:29	10:37:32	HSEA	400	160	500	1	0	Away	SW-S			I	G	PC	0	1	0-3 ft		
8/28/2013	CON	X-20	10:38:01	10:38:05	HSEA	20	180	110	1	0	None	LO	DI		I	G	PC	0	1	0-3 ft		
8/28/2013	CON	X-20	10:39:03	10:39:06	HSEA	200	90	300	1	0	Away	SW-S			I	G	PC	0	1	0-3 ft		
8/28/2013	CON	X-20	10:47:06	10:47:08	HSEA	200	100	175	1	0	None	SP			I	G	PC	0	1	0-3 ft		large splash, did not see animal but too big of splash for fish
8/28/2013	CON	NA	11:23:54	11:24:04	HSEA	60	90	150	1	0	Away	SW-S			NONE	G	S	0	1	0-3 ft		
8/28/2013	CON	T-19	13:12:31	13:12:34	HSEA	123	68	156	1	0	Parallel	SW-S	DI		SSI	E	PC	15	1	0-3 ft		
8/28/2013	CON	T-19	13:17:24	16:42:25	HSEA	310	200	435	1	0	None	HO	RE	LO	I	G	S	0	1	0-3 ft		This animal was hauled out during soft start also. Animal has some reddish color to its back Hauled out during piles T-19, T-20, V-20, M-20, J-20. Animal lifts head during
8/28/2013	CON	NA	14:45:58	14:46:10	HSEA	70	0	150	1	1	None	LO	RE		NONE	G	S	0	1	0-3 ft		nose up again, resting
8/28/2013	CON	NA	16:04:30	16:04:35	HSEA	112	90	120	2		Parallel	SW-N	DI		NONE	E	PC	15	0	0-3 ft		

Date	Event Code	Pile	Start Time	End Time	Species	Dist. To animal (m)	Dir. To animal (deg)	Dist to pile (m)	Best num of animals	Num of juv	Relative motion	Behavior 1	Behavior 2	Behavior 3	Const Type	Visi-bility	Weather	Glare (%)	BSS	Wave ht	Swell Dir	Comments
8/28/2013	CON	NA	16:06:11	16:06:15	HSEA	75	100	150	1	0	Parallel	SW-N			NONE	G	S	0	1	0-3 ft		
8/28/2013	OTHR	NA	16:37:55	16:39:18	CASL	50	220		14		None	HO	RE	LO	OTHER	G	PC	0	1	0-3 ft		Mammal survey of WRA fence
8/29/2013	CON	NA	8:26:56	8:28:42	HSEA	77	180	110	1	1	Away	SW-S	DI		NONE	G	OC	0	1	0-3 ft		traveling away from rig 1
8/29/2013	CON	R-19	8:50:14	8:50:18	HSEA	30	10	25	1	0	Away	SW-N			NONE	M	R	0	0	0-3 ft		
8/29/2013	CON	NA	9:33:10	9:34:19	HSEA	55	90	60	1	1	Toward	SW-SW	SI		NONE	G	PC	0	1	0-3 ft		moving between piles
8/29/2013	CON	M-19	10:24:33	10:27:27	HSEA	120	95	125	1	0	Parallel	TR-N	DI		V	E	PC	0	1	0-3 ft		
8/29/2013	CON	J-19	11:18:13	11:18:18	HSEA	45	20	40	1	0	None	MI	DI		NONE	G	L	0	1	0-3 ft		
8/29/2013	CON	J-19	11:33:00	11:35:54	HSEA	100	90	100	1	1	Parallel	SW-S	DI	TR-S	NONE	G	L	0	0	0-3 ft		
8/29/2013	CON	NA	13:48:40	13:50:11	HSEA	23	180	85	1	0	None	LO	SI		NONE	M	R	0	3	0-3 ft		
8/29/2013	CON	NA	14:09:28	14:09:32	HSEA	110	20	150	1	0	Away	DI			NONE	M	R	0	3	0-3 ft		Obseved short period of time.
8/29/2013	POST		16:23:35	16:23:36	HSEA	75	85	75	1	0	Parallel	SW-S			NONE	G	OC		1	0-3 ft		
8/30/2013	PRE	NA	8:08:39	8:08:47	HSEA	200	114		1	0	None	TR-N			NONE	G	S	10	2	0-3 ft		
8/30/2013	CON	NA	9:22:00	9:22:06	HSEA	200	160	200	1	0	None	LO			NONE	G	S	10	2	0-3 ft		
8/30/2013	CON	NA	9:28:47	9:29:06	HSEA	70	68		1	1	None	LO	VO		NONE	G	S	10	1	0-3 ft		
8/30/2013	CON	NA	9:38:29	9:38:36	HSEA	260	194		1	0	None	SW-N			NONE	G	S	10	1	0-3 ft		
8/30/2013	CON	T-24TD	9:42:14	9:42:19	HSEA	25	270	75	1	0	None	FL	SI		I	E	PC	15	1	0-3 ft		
8/30/2013	CON	NA	10:06:54	10:07:09	HSEA	50	310		1	0	None	LO			NONE	G	S	10	1	0-3 ft		
8/30/2013	CON	NA	10:25:34	10:25:38	HSEA	120	218		1	0	None	DI			NONE	G	S	10	2	0-3 ft		
8/30/2013	CON	NA	10:42:56	10:42:57	HSEA	135	83		1	0	None	LO	DI		NONE	G	S	10	1	0-3 ft		
8/30/2013	CON	NA	10:51:34	10:51:36	HSEA	190	53	90	1	0	None	LO	DI		NONE	G	S	10	1	0-3 ft		
8/30/2013	CON	NA	11:08:27	11:08:32	HSEA	60	130	230	1	0	None	LO	DI		NONE	G	PC	10	1	0-3 ft		
8/30/2013	CON	T24-TD	11:35:40	11:35:47	HSEA	125	50	60	1	0	Away	TR-N			NONE	G	S	10	1	0-3 ft		
8/30/2013	CON	T-25TC	11:36:07	11:36:10	HSEA	75	250	100	1	0	Away	FL	SI		I	E	PC	15	1	0-3 ft		
8/30/2013	CON	T26-TD	11:53:32	11:53:41	HSEA	176	48	100	1	0	None	LO	SI		NONE	G	S	10	1	0-3 ft		
8/30/2013	CON	NA	12:06:10	12:06:11	HSEA	100	136	80	1	0	Away	LO	DI		I	G	S	10	1	0-3 ft		
8/30/2013	CON	NA	12:35:47	12:36:04	HSEA	150	165		1	0	Toward	TR-N	DI		NONE	G	PC	0	1	0-3 ft		
8/30/2013	CON	NA	12:38:52	12:38:59	HSEA	170	196		1	0	Away	SW-S			NONE	G	PC	0	1	0-3 ft		
8/30/2013	CON	NA	13:02:55	13:03:00	HSEA	90	100		1	0	Away	SW-S	DI		NONE	G	PC	10	1	0-3 ft		
8/30/2013	CON	NA	13:13:48	13:13:51	HSEA	75	328		1	0	None	SW-S	DI		NONE	G	PC	0	1	0-3 ft		
8/30/2013	CON	NA	13:53:58	13:54:38	HSEA	75	330		1	0	None	SW-S	DI		NONE	G	PC	10	1	0-3 ft		

Date	Event Code	Pile	Start Time	End Time	Species	Dist. To animal (m)	Dir. To animal (deg)	Dist to pile (m)	Best num of animals	Num of juv	Relative motion	Behavior 1	Behavior 2	Behavior 3	Const Type	Visi-bility	Weather	Glare (%)	BSS	Wave ht	Swell Dir	Comments
8/30/2013	CON	NA	14:07:50	14:08:09	HSEA	5	280		1	0	None	LO	SW-S		NONE	G	PC	0	1	0-3 ft		Placing bubble curtain
8/30/2013	CON	X.8-40	14:11:01	14:17:01	HSEA	300	230	100	1	0	None	FL			I	E	PC	15	1	0-3 ft		
8/30/2013	CON	W-40	14:48:40	14:48:50	HSEA	50	220	50	1	0	None	SI			I	E	PC	50	1	0-3 ft		
9/3/2013	PRE	NA	9:05:22	9:06:59	HSEA	30	295		1	1	None	LO	SI		NONE	G	PC	0	1	0-3 ft		
9/3/2013	CON	NA	9:37:46	9:37:47	HSEA	95	180		1	1	None	RE	DI		NONE	G	PC	0	1	0-3 ft		Whole body resting, floating, at surface right next to boat tied up to a rig.
9/3/2013	CON	NA	9:47:54	9:48:01	HSEA	250	10		1	0	Parallel	SW-E			NONE	G	PC	0	1	0-3 ft		
9/3/2013	CON	NA	9:50:24	9:50:31	CASL	220	180		1	0	Away	SW-S			NONE	G	PC	0	1	0-3 ft		
9/3/2013	CON	NA	9:55:40	9:58:23	HSEA	25	290		1	1	None	LO	SW-S		NONE	G	PC	0	1	0-3 ft		Tossed up nose three times, possibly eating. Surfaced a few minutes later at 200 degrees, swimmimg slowly
9/3/2013	CON	NA	10:26:40	10:34:31	HSEA	350	356		1	0	Parallel	SW-E	DI		NONE	G	PC	0	1	0-3 ft		
9/3/2013	CON	T.8-40	10:55:46	10:55:55	HSEA	175	345	275	1	0	Away	SW-W			NONE	G	PC	0	1	0-3 ft		
9/3/2013	CON	T.8-40	11:13:28	11:13:36	HSEA	50	0	70	1	1	Toward	SW-S	LO		SSI	G	PC	0	1	0-3 ft		Animal swimming very fast but straight toward the pile. Looking at observer boat as swimming. Exhibiting behaviors indictive of flushing, fleeing.
9/3/2013	CON	T.8-40	11:20:10	11:20:55	HSEA	450	150	550	1	0	Away	SW-S			I	G	PC	0	1	0-3 ft		
9/3/2013	CON	T.8-40	11:24:32	11:24:50	HSEA	80	270	150	1	0	Away	SW-SE			I	G	PC	0	1	0-3 ft		
9/3/2013	CON	T.8-40	11:53:29	11:53:55	HSEA	220	136	305	1	0	Toward	SW-N	DI		NONE	G	PC	0	1	0-3 ft		
9/3/2013	CON	T.8-40	12:02:13	12:02:41	HSEA	75	195	500	1	1	Parallel	SW-E	DI		NONE	G	PC	0	1	0-3 ft		
9/3/2013	CON	T.8-40	12:02:43	12:03:11	HSEA	80	170	500	2	0	None	PL			NONE	G	PC	0	1	0-3 ft		Playing or breeding
9/3/2013	CON	T.8-40	12:07:54	12:07:56	HSEA	124	10	120	1	1	Away	SW-N			NONE	G	PC	0	1	0-3 ft		
9/3/2013	CON	NA	12:17:20	12:17:24	HSEA	40	254	300	1		Parallel	SW-E	DI		NONE	G	PC	0	1	0-3 ft		
9/3/2013	CON	NA	12:29:36	12:29:50	HSEA	30	350	70	1	0	Away	SW-S	DI		NONE	E	OC	15	1	0-3 ft		
9/3/2013	CON	NA	12:36:49	12:36:57	HSEA	50	190	80	1	0	None	SW-W	LO		NONE	E	PC	0	1	0-3 ft		Putting hammer on pile T.1-40
9/3/2013	CON	NA	12:38:43	12:38:59	HSEA	40	250	70	1	0	None	LO			NONE	E	PC	0	1	0-3 ft		Hammer on pile T.1-40
9/3/2013	CON	T.1-40	12:44:59	12:45:25	HSEA	85	240	115	1	0	Parallel	SW-SE			I	E	PC	10	1	0-3 ft		
9/3/2013	CON	T.1-40	12:48:05	12:48:25	HSEA	60	290	75	1	0	Away	SW-E	SW-S		I	E	PC	10	1	0-3 ft		swam east then quickly changed direction south
9/3/2013	CON	T.1-40	12:51:21	12:51:35	HSEA	110	210	140	1	0	Away	SW-SE			I	E	PC	10	1	0-3 ft		
9/3/2013	CON	NA	13:01:46	13:02:09	HSEA	60	200	95	1	0	Away	SW-SW	LO		NONE	E	S	10	1	0-3 ft		Pause from impact
9/3/2013	CON	NA	13:05:13	13:05:28	HSEA	115	250	90	1	0	Parallel	SW-E			NONE	E	PC	15	1	0-3 ft		Hammer lifted off pile T.1-40

Date	Event Code	Pile	Start Time	End Time	Species	Dist. To animal (m)	Dir. To animal (deg)	Dist to pile (m)	Best num of animals	Num of juv	Relative motion	Behavior 1	Behavior 2	Behavior 3	Const Type	Visi-bility	Weather	Glare (%)	BSS	Wave ht	Swell Dir	Comments
9/3/2013	CON	T.5-39	13:19:06	13:19:32	HSEA	50	240	80	1	0		LO	SI		NONE	E	PC	15	1	0-3 ft		Placing hammer on pile T.5-39
9/3/2013	CON	T.5-39	13:21:53	13:22:19	HSEA	40	250	85	1	0	None	LO	SI		NONE	E	PC	15	1	0-3 ft		Hammer on pile T.5-39
9/3/2013	CON	T.5-39	13:25:04	13:25:17	HSEA	45	245	85	1	0	Parallel	LO	SW-E		NONE	E	PC	10	1	0-3 ft		
9/3/2013	CON	T.5-39	13:27:21	13:27:29	HSEA	200	70	228	1	0	Away	SW-S			NONE	G	PC	0	1	0-3 ft		Just prior to impact
9/3/2013	CON	T.5-39	13:27:50	13:27:53	HSEA	50	70	170	1	0	Toward	SW-W	DI		NONE	G	PC	0	1	0-3 ft		Just prior to impact
9/3/2013	CON	T.5-39	13:27:51	13:29:22	HSEA	60	200	90	1	0	Parallel	SW-E			NONE	E	PC	15	1	0-3 ft		About to start impact on pile T.5-39
9/3/2013	CON	T.5-39	13:33:11	13:34:30	HSEA	90	200	120	1	0	Parallel	SW-E			I	E	PC	15	1	0-3 ft		Harbor seal is staying around the same location as a diver. Has a circular swimming pattern of diving west and swimming
9/3/2013	CON	T.5-39	13:40:34	13:40:52	HSEA	60	240	90	1	0	Away	MI	SI		NONE	E	PC	15	1	0-3 ft		Bubble curtain moving to next pile
9/3/2013	CON	NA	13:43:24	13:43:30	HSEA	70	230	110	1	0	Away	RE	DI		NONE	E	S	15	1	0-3 ft		Bubble curtain moving to next pile
9/3/2013	CON	NA	13:46:05	13:46:15	HSEA	50	180	80	1	0	Parallel	SW-W	RE	LO	NONE	E	S	15	1	0-3 ft		Bubble curtain moving to next pile
9/3/2013	CON	S-39	13:49:42	13:52:25	HSEA	300	320	400	1	0	Parallel	LO	SW-S		NONE	G	PC	0	1	0-3 ft		
9/3/2013	CON	S-39	13:50:26	13:51:02	HSEA	50	249	80	1	0	Parallel	SW-E	LO		NONE	E	S	15	1	0-3 ft		Placing hammer on pile S-39
9/3/2013	CON	S-39	13:55:17	13:57:47	HSEA	100	240	130	1	0	Parallel	SW-E			I	E	S	10	1	0-3 ft		
9/3/2013	CON	S-39	13:56:04	13:56:09	HSEA	70	270	135	1	1	None	LO			I	G	PC	0	1	0-3 ft		
9/3/2013	CON	S-39	13:57:53	13:58:04	HSEA	30	150	65	1	0	None	LO	SI		I	E	S	10	1	0-3 ft		
9/3/2013	CON	R.2-39	14:39:26	14:39:32	HSEA	150	270	300	1	0	Toward	SW-SE			I	G	PC	0	1	0-3 ft		
9/3/2013	CON	R.2-38	15:38:12	15:38:20	HSEA	250	100	150	1	0	Away	SW-S			NONE	G	PC	0	1	0-3 ft		
9/3/2013	OTHR	NA	16:17:23	16:19:42	CASL	60	270		14	13	None	HO			OTHER	G	PC	0	1	0-3 ft		2 hauled out on south outer fence, 12 hauled out between #6 and #7 buoys wra fence
9/4/2013	PRE	NA	8:05:12	8:05:54	HSEA	200	80	110	1	0	Away	SW-N	DI		NONE	G	L	0	1	0-3 ft		
9/4/2013	CON	NA	8:09:20	8:09:33	HSEA	78	160	90	1	0	None	LO	SI		NONE	G	L	10	1	0-3 ft		observed looking south, then popped head up 8" and sank.
9/4/2013	CON	M-18	8:22:17	8:22:22	HSEA	92	80	85	1		Away	SW-SE	SI		NONE	G	L	0	1	0-3 ft		may be same as sighting 1
9/4/2013	CON	NA	9:38:58	9:39:12	HSEA	35	35	65	1	1	Toward	SW-SE	DI		NONE	G	OC	0	1	0-3 ft		observed swimming toward pile M-18 while lifting J-18. dove to the north, away from pile.
9/4/2013	CON	X-17	11:48:19	11:48:28	HSEA	25	5	115	1	1	None	LO	SI		NONE	G	PC	0	1	0-3 ft		observed while pile X-17
9/4/2013	CON	V-17	13:36:46	13:37:39	HSEA	22	20	110	1	1	Toward	SW-S	DI		NONE	G	PC	0	1	0-3 ft		observed next to B-24
9/4/2013	CON	T-17	14:16:05	14:17:10	CASL	250	270	350	1	0	None	TR-N			NONE	G	PC	0	1	0-3 ft		observed traveling north at a moderate speed while hammer was being put onto pile T-17.
9/4/2013	CON	T-17	14:19:06	14:22:03	HSEA	200	68	225	1		Parallel	SW-S			V	E	OC	15	1	0-3 ft		

Date	Event Code	Pile	Start Time	End Time	Species	Dist. To animal (m)	Dir. To animal (deg)	Dist to pile (m)	Best num of animals	Num of juv	Relative motion	Behavior 1	Behavior 2	Behavior 3	Const Type	Visi-bility	Weather	Glare (%)	BSS	Wave ht	Swell Dir	Comments
9/4/2013	CON	T-17	14:24:33	14:24:41	HSEA	400	120	325	1	0	Away	SW-S	DI		NONE	G	PC	0	1	0-3 ft		observed between vibratory hammer activity on T-17 (surveying location d pile before final drive)
9/4/2013	CON	T-17	14:49:02	14:49:07	HSEA	30	338	25	1	1	None	RE	DI		NONE	E	OC	15	1	0-3 ft		
9/4/2013	CON	T-17	14:52:00	14:52:30	HSEA	75	338	50	1	1	None	RE	DI		V	E	PC	15	1	0-3 ft		
9/4/2013	CON	NA	15:02:41	15:02:46	HSEA	90	65	65	1	1	Away	SW-SW	DI		NONE	G	OC	0	1	0-3 ft		
9/5/2013	CON	X-17	9:08:52	9:10:45	HSEA	80	320	200	1		Away	DI	SW-W		SSI	G	R	0	1	0-3 ft		
9/5/2013	CON	NA	9:26:00	9:26:05	HSEA	40	4	100	1		None	DI	RE		NONE	G	R	0	1	0-3 ft		
9/5/2013	CON	NA	9:30:13	9:30:16	HSEA	290	80	280	1		Parallel	SW-N			NONE	G	R	0	1	0-3 ft		bubbl curtain on
9/5/2013	CON	NA	9:36:19	9:37:05	HSEA	290	80	280	1		Parallel	SW-N			NONE	G	R	0	1	0-3 ft		bubble curtain on
9/5/2013	CON	NA	9:45:07	9:45:29	HSEA	40	4	100	1		None	DI			NONE	G	R	0	1	0-3 ft		
9/5/2013	PRE	X-18	10:49:51	10:49:53	HSEA	200	45	150	2		Parallel	SW-N			NONE	G	OC	0	1	0-3 ft		
9/5/2013	CON	X-18	10:53:09	10:53:11	HSEA	100	160	150	1		Parallel	SW-S			I	G	OC	0	1	0-3 ft		
9/5/2013	CON	X-18	11:03:13	11:03:24	HSEA	110	68	120	1		Parallel	SW-N	DI		I	E	OC	15	0	0-3 ft		
9/5/2013	CON	V-17	11:17:07	11:17:21	HSEA	25	74	30	1	1	None	RE	DI		NONE	G	OC	0	1	0-3 ft		bubble curtain
9/5/2013	CON	V-17	11:22:08	11:22:11	HSEA	42	360	30	1	1	None	DI	RE		NONE	G	OC	0	1	0-3 ft		
9/5/2013	CON	V-17	11:35:18	11:35:20	HSEA	150	90	200	1		Parallel	SW-S			I	G	OC	0	1	0-3 ft		
9/5/2013	CON	V-17	11:36:56	11:37:22	HSEA	200	158	220	1	0	Away	SW-S	DI		I	E	OC	15	0	0-3 ft		
9/5/2013	CON	V-17	11:38:39	11:38:46	HSEA	250	158	266	1	0	Away	SW-S	DI		I	E	OC	15	0	0-3 ft		
9/5/2013	CON	V-17	11:40:32	11:40:35	UNKW	90	80	200	1		None	SI			I	G	OC	0	1	0-3 ft		un-id marine mamal snout
9/5/2013	CON	V-17	11:43:37	11:43:43	HSEA	200	135	230	1	1	Away	SW-S	SI		I	E	PC	15	0	0-3 ft		
9/5/2013	PRE	V-18	12:37:03	12:37:06	HSEA	10	360	30	1	1	None	RE	DI		NONE	G	OC	0	1	0-3 ft		
9/5/2013	PRE	V-18	12:39:48	12:40:04	HSEA	10	360	30	1	1	None	RE			NONE	G	OC	0	1	0-3 ft		
9/5/2013	CON	NA	12:42:41	12:42:50	HSEA	80	112	100	1	1	Parallel	SW-N	DI		NONE	E	OC	15	0	0-3 ft		
9/5/2013	CON	NA	12:46:28	12:46:42	HSEA	110	112	130	1	1	Parallel	SW-S	SI		NONE	E	PC	15	0	0-3 ft		
9/5/2013	CON	V-18	12:49:38	12:49:39	HSEA	230	180	350	1		Parallel	SW-S			I	G	OC	0	1	0-3 ft		
9/5/2013	CON	V-18	12:57:09	12:57:10	HSEA	210	108	300	1		Toward	SW-NE			I	G	OC	0	1	0-3 ft		
9/5/2013	CON	V-17	13:11:41	13:11:45	HSEA	15	90	50	1	1	Away	SW-E	DI		I	E	PC	15	0	0-3 ft		
9/5/2013	CON	V-17	13:20:44	13:20:46	HSEA	220	120	300	1		Parallel	SW-N			I	G	OC	0	1	0-3 ft		
9/5/2013	CON	V-17	13:23:15	13:23:20	HSEA	100	90	120	1	1	Parallel	SW-S			I	E	OC	15	0	0-3 ft		
9/5/2013	CON	NA	13:39:40	13:39:41	HSEA	20	160	40	1		None	RE	DI		NONE	G	OC	0	1	0-3 ft		bubble net in
9/5/2013	CON	NA	13:48:13	13:48:32	HSEA	218	80	250	1		Parallel	SW-S			NONE	G	OC	0	1	0-3 ft		bubble net in
9/5/2013	CON	NA	13:53:10	13:53:11	HSEA	5	85	30	1	1	None	RE	DI		NONE	G	OC	0	1	0-3 ft		
9/5/2013	CON	NA	13:53:15	13:53:16	HSEA	70	300	100	1		Toward	DI	SW-NE		NONE	G	OC	0	1	0-3 ft		
9/5/2013	CON	J-19	13:57:17	13:57:18	HSEA	70	160	40	1	1	None	RE	DI		I	G	OC	0	1	0-3 ft		
9/5/2013	CON	J-19	13:59:34	14:00:05	HSEA	200	135	225	1		Away	SW-S	DI		I	E	PC	15	0	0-3 ft		
9/5/2013	CON	NA	14:23:18	14:23:19	HSEA	50	80	200	1		Parallel	SW-N			NONE	G	OC	0	1	0-3 ft		

Date	Event Code	Pile	Start Time	End Time	Species	Dist. To animal (m)	Dir. To animal (deg)	Dist to pile (m)	Best num of animals	Num of juv	Relative motion	Behavior 1	Behavior 2	Behavior 3	Const Type	Visi-bility	Weather	Glare (%)	BSS	Wave ht	Swell Dir	Comments
9/5/2013	CON	M-19	14:24:27	14:24:29	HSEA	50	140	125	1		Parallel	SW-N			NONE	G	OC	0	1	0-3 ft		
9/5/2013	CON	NA	14:26:18	14:26:32	HSEA	25	90	50	1	1	None	MI	SI		NONE	E	PC	15	0	0-3 ft		
9/5/2013	CON	M-19	14:28:41	14:28:43	HSEA	100	28	250	1		Parallel	SW-S			I	G	OC	0	1	0-3 ft		
9/5/2013	CON	M-19	14:29:36	14:29:59	HSEA	180	90	200	1	1	None	MI	LO	SI	I	E	PC	15	0	0-3 ft		
9/5/2013	CON	M-19	14:31:24	14:31:48	HSEA	175	112	195	1	1	None	MI	DI		I	E	PC	15	0	0-3 ft		
9/5/2013	CON	M-19	14:31:53	14:31:53	HSEA	263	110	350	1		Parallel	SW-S			I	E	PC	15	1	0-3 ft		
9/5/2013	CON	NA	14:34:40	14:34:53	HSEA	85	112	105	1	1	None	MI	DI		NONE	E	PC	15	0	0-3 ft		
9/5/2013	CON	NA	14:36:32	14:36:47	HSEA	120	112	140	1	1	None	MI	SI		NONE	E	PC	15	0	0-3 ft		
9/5/2013	CON	NA	14:39:11	14:39:17	HSEA	20	110	50	2		Toward	SW-W			NONE	E	PC	15	1	0-3 ft		two seals within 20m of eachother
9/5/2013	CON	NA	14:42:04	14:42:26	HSEA	80	68	120	1	0	Parallel	SW-S	SI		NONE	E	PC	15	0	0-3 ft		
9/5/2013	CON	V-22	14:42:20	14:42:36	HSEA	100	68	120	1	1	Parallel	SW-N	DI		NONE	E	PC	15	0	0-3 ft		
9/5/2013	CON	NA	14:48:36	14:48:49	HSEA	40	68	60	1	0	None	RE	SI		NONE	E	S	15	1	0-3 ft		
9/5/2013	CON	NA	14:48:51	14:49:01	HSEA	76	68	95	1	0	None	RE	MI	DI	NONE	E	S	15	0	0-3 ft		
9/5/2013	CON	R-19	14:51:31	14:51:32	HSEA	30	280	70	1		None	RE			I	E	PC	15	1	0-3 ft		
9/5/2013	CON	R-19	14:53:23	14:53:36	HSEA	80	90	100	1	0	None	MI	SI		I	E	PC	15	1	0-3 ft		
9/5/2013	CON	NA	14:56:36	14:56:45	HSEA	130	68	150	1	0	None	MI	DI		NONE	E	S	15	0	0-3 ft		
9/5/2013	CON	R-19	14:59:45	14:59:47	HSEA	15	0	150	1		Parallel	DI			I	E	PC	15	1	0-3 ft		
9/5/2013	CON	NA	15:14:27	15:14:28	HSEA	250	220	325	1		Away	SW-S			NONE	E	PC	15	1	0-3 ft		
9/5/2013	CON	NA	15:19:19	15:19:29	HSEA	120	68	140	1	0	None	RE	MI	SI	NONE	E	S	15	0	0-3 ft		
9/5/2013	CON	NA	15:22:52	15:22:55	HSEA	95	68	115	1	0	None	MI	SI		NONE	E	PC	15	0	0-3 ft		
9/5/2013	CON	J-18	15:25:14	15:25:33	HSEA	95	112	115	1	0	Parallel	SW-S	DI		I	E	PC	15	1	0-3 ft		
9/5/2013	CON	J-18	15:25:35	15:25:53	HSEA	65	68	85	1	1	Away	SW-E	SI		I	E	PC	15	1	0-3 ft		
9/5/2013	CON	M-18	15:51:21	15:51:23	HSEA	86	90	107	1	1	Away	SW-E	DI		I	E	S	15	0	0-3 ft		
9/5/2013	CON	T-18	16:05:41	16:05:50	HSEA	125	90	145	1	0	Parallel	SW-S			NONE	E	PC	15	0	0-3 ft		
9/5/2013	CON	NA	16:05:55	16:05:56	HSEA	80	180	80	1	1	None	SW-N	DI		NONE	E	PC	15	1	0-3 ft		
9/5/2013	CON	T-18	16:07:26	16:07:50	HSEA	145	135	165	1	0	Parallel	SW-S	DI		I	E	PC	15	0	0-3 ft		
9/5/2013	CON	T-18	16:09:17	16:09:29	HSEA	148	136	168	1	0	None	RE	DI		I	E	PC	15	1	0-3 ft		
9/5/2013	CON	T-18	16:09:25	16:09:26	HSEA	262	174	350	1	1	Parallel	SW-S			I	E	PC	15	1	0-3 ft		
9/5/2013	CON	T-18	16:10:22	16:10:24	HSEA	120	158	145	1	0	None	RE	SI		I	E	OC	15	0	0-3 ft		
9/5/2013	CON	NA	16:36:33	16:36:45	HSEA	120	112	140	1	1	None	RE	SI		NONE	E	OC	15	0	0-3 ft		
9/5/2013	CON	NA	16:36:46	16:36:47	HSEA	60	138	100	1		None	DI	RE		NONE	E	PC	15	1	0-3 ft		
9/5/2013	CON	NA	16:43:53	16:44:01	HSEA	180	135	200	1	1	Away	SW-S	DI		NONE	E	PC	15	0	0-3 ft		
9/5/2013	CON	NA	16:50:41	16:50:45	HSEA	180	90	200	1	0	None	RE	MI	SI	NONE	E	PC	15	0	0-3 ft		
9/5/2013	CON	R-18	17:13:56	17:14:07	HSEA	160	90	180	1	0	None	MI	RE	SI	NONE	E	PC	15	1	0-3 ft		
9/5/2013	CON	R-18	17:14:11	17:14:21	HSEA	60	70	140	1		Parallel	SW-N			I	E	PC	15	1	0-3 ft		
9/6/2013	PRE		7:38:11	7:38:24	HSEA	30	274		1		None	TR-SW	DI		NONE	G	L	0	1	0-3 ft		

Date	Event Code	Pile	Start Time	End Time	Species	Dist. To animal (m)	Dir. To animal (deg)	Dist to pile (m)	Best num of animals	Num of juv	Relative motion	Behavior 1	Behavior 2	Behavior 3	Const Type	Visi-bility	Weather	Glare (%)	BSS	Wave ht	Swell Dir	Comments
9/6/2013	PRE		7:56:02	7:56:07	HSEA	300	130		1	1	None	TR-S			NONE	G	L	0	1	0-3 ft		
9/6/2013	PRE	N-17	7:58:14	7:58:50	HSEA	60	270	85	1	0	Parallel	DI			NONE	G	OC	0	1	0-3 ft		
9/6/2013	CON		8:10:52	8:11:08	HSEA	60	80		1		None	RE	DI		NONE	G	L	0	1	0-3 ft		
9/6/2013	CON		8:26:23	8:26:31	HSEA	300	208	300	1		None	RE	SI		NONE	G	L	0	1	0-3 ft		
9/6/2013	CON	NA	8:40:48	8:40:58	HSEA	75	290	120	1	0	Parallel	SW-S	DI		NONE	G	OC	0	1	0-3 ft		
9/6/2013	CON	NA	9:22:16	9:22:27	HSEA	30	18	110	1		Toward	SW-W	DI		NONE	G	R	0	1	0-3 ft		
9/6/2013	CON	NA	9:26:49	9:27:10	HSEA	70	128	50	1	1	Away	SW-N			NONE	G	R	0	1	0-3 ft		
9/6/2013	CON	J-17	9:29:02	9:29:29	HSEA	70	84	100	1	1	Away	RE	SW-N		V	G	R	0	1	0-3 ft		
9/6/2013	CON	J-17	9:32:25	9:32:31	HSEA	100	60	120	1	1	Away	SW-N			V	G	R	0	1	0-3 ft		
9/6/2013	CON	J-17	9:40:20	9:40:27	HSEA	100	60	120	1	1	Away	SW-N			V	G	R	0	1	0-3 ft		
9/6/2013	CON	NA	9:46:43	9:46:50	HSEA	140	34	180	1	1	None	RE	DI		NONE	G	R	0	1	0-3 ft		
9/6/2013	CON	NA	10:03:02	10:03:23	HSEA	90	130	60	1	1	None	RE	DI		NONE	G	R	0	1	0-3 ft		
9/6/2013	CON	NA	10:19:56	10:20:09	HSEA	150	18	290	1		None	RE	DI		NONE	G	R	0	1	0-3 ft		Moving barge
9/6/2013	CON	NA	10:27:59	10:28:20	HSEA	260	160	120	1		None	SW-SW			NONE	G	R	0	1	0-3 ft		Moving barge
9/6/2013	CON	NA	10:31:33	10:31:51	HSEA	160	110	10	1		None	RE			NONE	G	R	0	1	0-3 ft		Moving barge
9/6/2013	CON	NA	10:43:48	10:44:00	HSEA	80	78	100	1		None	LO	SI		NONE	G	R	0	1	0-3 ft		
9/6/2013	CON	NA	10:52:29	10:54:44	HSEA	140	200	190	1	0	Away	SW-NW			NONE	G	OC	0	1	0-3 ft		
9/6/2013	CON	NA	10:54:39	10:55:01	HSEA	30	190	60	1	1	Away	SW-NW	LO		NONE	G	OC	0	1	0-3 ft		
9/6/2013	CON	NA	11:01:41	11:01:47	HSEA	175	120	225	1	1	None	LO	DI		NONE	G	OC	0	1	0-3 ft		
9/6/2013	CON	X-16	11:04:50	11:04:54	HSEA	125	90	175	1	1	Parallel	SW-N	LO	DI	V	G	OC	0	1	0-3 ft		In between vibe hammer on/off
9/6/2013	CON	NA	11:07:11	11:07:30	HSEA	40	89	90	1		None	LO	SI		NONE	G	R	0	1	0-3 ft		
9/6/2013	CON	X-16	11:09:26	11:09:32	HSEA	30	180	80	1	0	Away	SW-N	LO	SW-S	V	G	OC	0	1	0-3 ft		
9/6/2013	CON	X-16	11:14:07	11:14:19	HSEA	50	100	100	1	1	None	LO	UN		V	G	OC	0	1	0-3 ft		Just vibed, possibly foraging. Swam in a zig zag quickly, Likely one of the animals in sighting 5 or
9/6/2013	CON	X-16	11:24:24	11:24:33	HSEA	300	170	280	1		Toward	SW-N	DI		V	G	R	0	1	0-3 ft		
9/6/2013	CON	NA	11:39:40	11:40:03	HSEA	60	80	60	1		None	MI			NONE	G	R	0	1	0-3 ft		
9/6/2013	CON	NA	11:44:16	11:44:21	HSEA	80	160	70	1		None	RE			NONE	G	R	0	1	0-3 ft		
9/6/2013	CON	NA	11:46:30	11:46:37	HSEA	20	207	100	1		None	LO	SI		NONE	G	R	0	1	0-3 ft		
9/6/2013	CON	NA	11:49:21	11:49:51	HSEA	250	164	220	1		None	SW-S	DI		NONE	G	OC	0	1	0-3 ft		
9/6/2013	CON	NA	11:54:10	11:54:19	HSEA	120	190	70	1		Toward	SW-SE	DI		NONE	G	OC	0	1	0-3 ft		
9/6/2013	CON	NA	11:57:10	11:57:30	HSEA	50	90	80	1		None	RE			NONE	G	OC	0	1	0-3 ft		

Date	Event Code	Pile	Start Time	End Time	Species	Dist. To animal (m)	Dir. To animal (deg)	Dist to pile (m)	Best num of animals	Num of juv	Relative motion	Behavior 1	Behavior 2	Behavior 3	Const Type	Visi-bility	Weather	Glare (%)	BSS	Wave ht	Swell Dir	Comments
9/6/2013	CON	NA	11:59:46	11:59:54	HSEA	40	110	30	2		None	SW-E	DI		NONE	G	OC	0	1	0-3 ft		
9/6/2013	CON	V-16	12:01:24	12:02:17	HSEA	170	100	220	2	0	Parallel	SW-N	LO	DI	V	G	OC	0	1	0-3 ft		
9/6/2013	CON	V-16	12:06:05	12:06:06	HSEA	150	75	200	1	0	Parallel	SW-N			V	G	OC	0	1	0-3 ft		one of
9/6/2013	CON	V-16	12:06:06	12:06:15	HSEA	150	75	200	1	0	Parallel	SW-N			V	G	OC	0	1	0-3 ft		Stopped vibe while animal was still swimming north
9/6/2013	CON	NA	12:13:47	12:14:01	HSEA	170	350	220	1		None	LO	SI		NONE	G	OC	0	1	0-3 ft		
9/6/2013	CON	NA	12:28:43	12:47:47	HSEA	10	280	2	1	1	None	MI			NONE	G	OC	0	1	0-3 ft		Juvenile milling around work area as crew takes lunch
9/6/2013	CON	NA	12:55:34	12:55:51	HSEA	220	38	230	1		None	LO			NONE	G	OC	0	1	0-3 ft		
9/6/2013	CON	NA	13:02:44	13:03:12	HSEA	12	204	100	1		Toward	SW-E	SI		NONE	G	OC	0	1	0-3 ft		
9/6/2013	CON	NA	13:08:05	13:09:31	HSEA	10	40	200	1	0	None	LO	DI		NONE	G	OC	0	1	0-3 ft		
9/6/2013	CON	NA	13:12:16	13:12:22	HSEA	75	100	65	1		Away	SW-N			NONE	G	OC	0	1	0-3 ft		stabbing pile
9/6/2013	CON	NA	13:20:15	13:20:40	HSEA	280	176	270	2		Away	SW-S			NONE	G	OC	0	1	0-3 ft		
9/6/2013	CON	NA	13:22:25	13:22:27	HSEA	40	10	60	1	1	Parallel	LO	DI		V	G	OC	0	1	0-3 ft		
9/6/2013	CON	NA	13:32:18	13:32:40	HSEA	85	274	160	1		Parallel	SW-S			NONE	G	OC	0	1	0-3 ft		
9/6/2013	CON	NA	13:53:39	13:53:45	HSEA	65	115	50	1	1	Toward	SW-S	DI		NONE	G	OC	0	1	0-3 ft		
9/6/2013	CON	NA	13:56:21	13:56:25	HSEA	180	54	200	1		None	RE			NONE	G	OC	0	1	0-3 ft		
9/6/2013	CON	NA	13:59:04	13:59:10	HSEA	280	200	270	1		Away	SW-SW	DI		NONE	G	OC	0	1	0-3 ft		
9/6/2013	CON	NA	14:03:55	14:04:05	HSEA	40	50	60	1		Away	SW-N			NONE	G	OC	0	1	0-3 ft		
9/6/2013	CON	NA	14:05:02	14:05:03	HSEA	220	80	240	1		None	RE			NONE	G	OC	0	1	0-3 ft		
9/6/2013	CON	NA	14:12:31	14:12:45	HSEA	280	176	260	1		None	RE	DI		NONE	G	PC	0	1	0-3 ft		
9/6/2013	CON	NA	14:15:03	14:15:18	HSEA	260	184	240	1		None	RE	DI		NONE	G	PC	0	1	0-3 ft		
9/6/2013	CON	NA	14:22:40	14:23:52	HSEA	260	186	240	1		None	RE			NONE	G	PC	0	1	0-3 ft		
9/6/2013	CON	NA	14:25:41	14:26:03	HSEA	280	220	290	1		None	LO	SI		NONE	G	PC	0	1	0-3 ft		
9/6/2013	CON	NA	14:27:16	14:27:28	HSEA	280	222	290	1		None	MI			NONE	G	PC	0	1	0-3 ft		
9/6/2013	CON	NA	14:35:14	14:35:20	HSEA	100	68	120	1		Toward	SW-S			NONE	G	PC	0	1	0-3 ft		positioning pile
9/6/2013	CON	NA	14:39:02	14:39:08	HSEA	70	112	70	1		None	LO	SI		NONE	G	PC	0	1	0-3 ft		stabbing
9/6/2013	CON	NA	14:46:38	14:46:40	HSEA	25	28	80	1		Toward	SW-S			NONE	G	PC	0	1	0-3 ft		Placing hammer
9/6/2013	CON	NA	14:48:24	14:48:27	HSEA	100	60	130	1		Away	SW-NE			NONE	G	PC	0	1	0-3 ft		PLACING HAMMER
9/6/2013	CON	R-16	14:51:35	14:51:40	HSEA	200	180	230	1	0	Away	SW-SW			V	G	OC	0	1	0-3 ft		
9/6/2013	CON	NA	15:05:41	15:05:47	HSEA	300	188	300	3		None	SW-N			NONE	G	PC	0	0	0-3 ft		3 animals within about 20m of each other
9/6/2013	CON	NA	15:09:50	15:10:22	HSEA	200	184	130	1		Toward	SW-N			NONE	G	PC	0	0	0-3 ft		

Date	Event Code	Pile	Start Time	End Time	Species	Dist. To animal (m)	Dir. To animal (deg)	Dist to pile (m)	Best num of animals	Num of juv	Relative motion	Behavior 1	Behavior 2	Behavior 3	Const Type	Visi-bility	Weather	Glare (%)	BSS	Wave ht	Swell Dir	Comments
9/6/2013	CON	NA	15:10:31	15:11:52	HSEA	300	182	280	1		Away	SW-S			NONE	G	PC	0	0	0-3 ft		LIFTING PILE
9/6/2013	CON	NA	15:14:08	15:14:19	HSEA	70	110	60	1		Away	SW-N	DI		NONE	G	PC	0	0	0-3 ft		lifting pile
9/6/2013	CON	NA	15:16:08	15:17:32	HSEA	180	40	200	1		Away	MI	RE		NONE	G	PC	0	0	0-3 ft		lifting pile
9/6/2013	CON	NA	15:24:35	15:24:47	HSEA	300	230	290	1		None	RE	SI		NONE	G	PC	0	0	0-3 ft		
9/6/2013	CON	NA	15:28:05	15:28:51	HSEA	300	208	280	2		None	RE	SW-E		NONE	G	PC	0	1	0-3 ft		
9/6/2013	CON	NA	15:53:54	15:54:01	HSEA	25	308	125	1		None	LO	SI		NONE	G	PC	0	1	0-3 ft		
9/6/2013	CON	NA	16:01:27	16:03:26	HSEA	80	124	100	1	1	None	RE	DI	RE	NONE	G	PC	0	1	0-3 ft		LIFTING PILE
9/6/2013	CON	J-16	16:22:15	16:22:30	HSEA	250	160	300	1	0	Parallel	SW-S			V	G	OC	0	0	0-3 ft		
9/6/2013	POST	J-16	16:33:52	16:33:59	HSEA	320	80	350	1	0	Parallel	SW-S			NONE	G	OC	0	0	0-3 ft		
9/6/2013	POST	NA	16:41:49	16:42:10	HSEA	30	0	25	1	1	Toward	LO	SI		NONE	G	OC	0	0	0-3 ft		
9/9/2013	CON	NA	10:16:03	10:16:25	HSEA	20	225	30	1		Toward	SW-NW			NONE	M	F	10	1	0-3 ft		
9/9/2013	CON	NA	10:18:34	10:18:43	HSEA	10	0	50	1		None	DI			NONE	M	F	10	1	0-3 ft		
9/9/2013	CON	X-15	10:22:12	10:22:31	HSEA	30	180	100	1		None	DI	LO		V	M	F	10	1	0-3 ft		
9/9/2013	CON	X-15	10:28:37	10:28:46	HSEA	115	100	135	1	0	Parallel	SW-N	DI		V	E	S	0	1	0-3 ft		swimming north very close to shore
9/9/2013	CON	NA	10:32:17	10:32:35	HSEA	20	90	50	1		Away	SW-S	DI		NONE	M	F	10	1	0-3 ft		
9/9/2013	CON	NA	10:53:31	10:53:46	HSEA	20	135	200	1		Toward	LO	DI		NONE	P	F	10	1	0-3 ft		
9/9/2013	CON	NA	11:03:52	11:04:08	HSEA	30	60	100	1		None	LO			NONE	P	F	10	1	0-3 ft		
9/9/2013	CON	V-15	11:06:42	11:06:50	HSEA	78	150	100	1	0	Toward	SW-NW	SI		V	E	S	0	1	0-3 ft		swimming toward rig, but far away.
9/9/2013	CON	NA	11:12:18	11:12:27	HSEA	10	125	40	1		None	LO	SI		NONE	M	F	10	1	0-3 ft		
9/9/2013	CON	NA	11:23:35	11:23:43	HSEA	15	100	20	1		None	LO	DI		NONE	G	F	10	1	0-3 ft		
9/9/2013	CON	NA	11:27:56	11:28:11	HSEA	20	90	40	1		None	LO	DI		NONE	G	F	10	1	0-3 ft		
9/9/2013	CON	R-15	13:08:11	13:08:16	HSEA	30	60	100	1	1	Away	LO	SW-E	SI	V	E	S	20	2	0-3 ft		
9/9/2013	CON	NA	13:21:19	13:21:26	HSEA	150	180	40	1	1	Toward	SW-N	DI		NONE	E	S	20	2	0-3 ft		
9/9/2013	CON	NA	13:25:06	13:27:55	HSEA	10	200	50	1		None	DI	LO	MI	NONE	E	S	20	2	0-3 ft		
9/9/2013	CON	NA	13:34:32	13:43:55	HSEA	35	90	35	1	1	None	LO	SI	SP	NONE	E	S	20	2	0-3 ft		
9/9/2013	CON	M-15	13:40:22	13:40:36	HSEA	8	0	8	1	1	Toward	SW-S	LO	DI	NONE	E	S	0	1	0-3 ft		Swimming around r-15. dove under barge on the south. Observed while crew changing from pile clamps to hammer
9/9/2013	CON		15:36:29	15:36:39	HSEA	50	260	50	1	0	Parallel	SW-S	DI		NONE	E	S	0	1	0-3 ft		
9/9/2013	CON	NA	16:00:43	16:01:05	HSEA	20	90	40	1		None	DI	LO		NONE	E	S	20	2	0-3 ft		

Date	Event Code	Pile	Start Time	End Time	Species	Dist. To animal (m)	Dir. To animal (deg)	Dist to pile (m)	Best num of animals	Num of juv	Relative motion	Behavior 1	Behavior 2	Behavior 3	Const Type	Visi-bility	Weather	Glare (%)	BSS	Wave ht	Swell Dir	Comments
9/9/2013	CON	NA	16:07:29	16:07:38	HSEA	40	90	30	1		None	DI	LO		NONE	E	S	20	2	0-3 ft		
9/9/2013	CON	V.1-W6	17:00:35	17:03:41	HSEA	5	90	30	1		None	LO	DI		V	E	S	20	2	0-3 ft		
9/9/2013	CON	V.1-W6	17:09:57	17:10:20	HSEA	30	90	50	1		None	DI	LO		V	E	S	20	2	0-3 ft		
9/10/2013	CON	NA	10:16:06	10:16:13	HSEA	40	20	60	1	1	None	LO	SI		NONE	E	S	25	2	0-3 ft		Tilted head back then sank. Picking up bubble curtain
9/10/2013	CON	NA	10:48:35	10:48:41	HSEA	50	45		1	0	None	RE	SI		NONE	E	S	25	2	0-3 ft		Rig #1 moving bubble curtain around batter pile, Rig #2 moving equipment around barge
9/10/2013	CON	NA	10:52:49	10:53:01	HSEA	70	20	40	1	0	None	LO	SI		NONE	E	S	25	2	0-3 ft		Still placing bubble curtain
9/10/2013	CON	NA	11:07:26	11:07:30	HSEA	20	200	110	1	0	None	LO	SI		NONE	E	S	25	2	0-3 ft		
9/10/2013	CON	NA	11:24:49	11:25:07	HSEA	170	10	225	1		None	LO	SI		NONE	E	S	25	2	0-3 ft		placing vibe hammer
9/10/2013	CON	X-14	11:31:50	11:32:10	HSEA	170	10	225	1		None	LO	SI		V	E	S	25	2	0-3 ft		~15 sec after vibe off
9/10/2013	CON	NA	11:42:19	11:51:13	HSEA	60	90	50	1		None	LO	SI		NONE	E	S	25	2	0-3 ft		
9/10/2013	CON	NA	11:58:04	12:12:11	HSEA	170	10	220	1		None	LO	SI		NONE	E	S	25	2	0-3 ft		stabbing v14
9/10/2013	CON	NA	12:07:18	16:28:56	HSEA	360	180	310	1		None	HO			NONE	E	S	25	2	0-3 ft		did not move for V14, X14, T14, M14, R14 vibe
9/10/2013	CON		12:08:15	12:08:35	HSEA	100	20	130	1	0	Parallel	SW-S	DI		NONE	E	S	15	1	0-3 ft		Hammer on pile
9/10/2013	CON	NA	12:09:34	12:09:35	HSEA	170	10	225	1		None	LO	FL	SI	NONE	E	S	25	2	0-3 ft		placing vibe hammer
9/10/2013	CON		12:10:31	12:10:35	HSEA	95	150	120	1	0	Parallel	SW-S	DI		NONE	E	S	15	1	0-3 ft		Hammer on pile
9/10/2013	CON	NA	12:14:33	12:18:52	HSEA	110	25	180	1		Parallel	LO	SW-S	DI	NONE	E	S	25	2	0-3 ft		after short vibe, hammer taken off for fix
9/10/2013	CON	NA	12:26:01	12:26:19	HSEA	85	180	60	1		None	SI			NONE	E	S	25	2	0-3 ft		
9/10/2013	CON	NA	12:30:42	12:32:52	HSEA	50	120	30	1		None	LO	SI		NONE	B	S	25	2	0-3 ft		
9/10/2013	CON	NA	12:41:38	12:44:03	UNKW	150	270	260	1		Away	PO	SW-S	SI	NONE	B	S	25	2	0-3 ft		sea lion, sp unknown. swam away toward fencing, surfacing and splashing frequently. Possibly 2 animals.
9/10/2013	CON	V-14	12:47:09	12:47:27	HSEA	100	15	190	1		None	LO	SI		V	B	S	25	2	0-3 ft		
9/10/2013	CON		12:56:55	12:57:17	HSEA	20	270		1	1	None	LO	DI		NONE	E	S	15	1	0-3 ft		Dove backwards,9
9/10/2013	CON	NA	14:18:05	14:22:34	HSEA	135	190	40	1		Toward	LO	SW-NE	SI	NONE	B	S	25	2	0-3 ft		pile T14 in the air, then stabbing
9/10/2013	CON	NA	14:28:27	14:47:50	HSEA	40	90	55	1		Toward	SW-N	LO	DI	NONE	E	S	25	2	0-3 ft		impact hammer in the air, on pile but not impacting
9/10/2013	CON	NA	14:56:05	14:56:16	HSEA	130	180	200	1		None	LO	SI		NONE	B	S	25	2	0-3 ft		impact hammer on pile, vibe pile in the air
9/10/2013	CON	R-14	15:10:04	15:10:31	HSEA	55	280	115	1		None	LO	SI		V	B	S	25	2	0-3 ft		
9/10/2013	CON	NA	15:17:55	15:18:07	HSEA	60	105	63	1		None	LO	SI		NONE	B	S	25	2	0-3 ft		
9/10/2013	CON	NA	15:55:10	15:56:19	HSEA	90	185	120	1		None	LO	SI		NONE	B	S	25	2	0-3 ft		vibe hammer in air

Date	Event Code	Pile	Start Time	End Time	Species	Dist. To animal (m)	Dir. To animal (deg)	Dist to pile (m)	Best num of animals	Num of juv	Relative motion	Behavior 1	Behavior 2	Behavior 3	Const Type	Visi-bility	Weather	Glare (%)	BSS	Wave ht	Swell Dir	Comments
9/10/2013	CON	M-14	16:01:06	16:03:36	HSEA	60	140	35	1		Toward	SW-N	LO	SI	V	B	S	25	2	0-3 ft		resurfaced, looking around, sank during vibe pile M-14
9/10/2013	CON	NA	16:10:41	16:10:49	HSEA	110	165	245	1		Toward	SW-N	LO	DI	NONE	B	S	25	2	0-3 ft		
9/10/2013	POST	NA	17:44:01	17:44:20	HSEA	15	95	75	2	1	Away	SW-S	LO	DI	NONE	B	S	25	2	0-3 ft		continued to monior after vibe post for possible impact driving
9/11/2013	PRE		8:05:48	8:06:06	HSEA	400	350		1	0	None	RE			NONE	E	S	25	0	0-3 ft		
9/11/2013	PRE	NA	8:15:28	12:57:18	HSEA	350	180		1	0	None	HO			NONE	E	S	25	0	0-3 ft		Hauled out on dock next to Marginal
9/11/2013	CON	NA	8:26:40	8:26:52	HSEA	250	110		1	0	Away	SW-NE			NONE	E	S	25	0	0-3 ft		Seal swimming straight for an area wirh forage fish feeding, at least 10 areas where waters active with forage fish feeding.
9/11/2013	CON	NA	8:32:11	8:32:15	HSEA	50	100		2	0	Away	SW-S			NONE	E	S	25	0	0-3 ft		
9/11/2013	CON	NA	8:37:54	8:38:05	HSEA	30	25		1	0	Parallel	SW-E			NONE	E	S	25	0	0-3 ft		
9/11/2013	CON	NA	8:55:10	8:55:20	HSEA	50	0		1	0	None	RE	LO	SI	NONE	E	S	25	1	0-3 ft		
9/11/2013	CON	NA	9:24:48	9:24:51	HSEA	30	170	100	1		Toward	SW-E			NONE	E	S	25	1	0-3 ft		
9/11/2013	CON	NA	9:42:38	9:43:09	HSEA	10	250	40	1	1	None	LO			NONE	E	S	25	1	0-3 ft		
9/11/2013	CON	V-13	10:11:17	10:11:20	HSEA	40	270	55	1	1	Away	SW-W	DI		NONE	E	S	0	1	0-3 ft		stabbing
9/11/2013	CON	V-13	10:27:31	10:27:39	HSEA	15	90	350	1	1	Toward	LO			V	E	S	25	1	0-3 ft		same juvenille in sighting 8, closer to batter pile that will be impacted (v.1 w6
9/11/2013	CON	T-13	11:02:48	11:02:55	HSEA	60	15	70	1	0	Toward	SW-S	DI		NONE	E	S	0	1	0-3 ft		between stabbing and vibing
9/11/2013	CON	V.1-W6	11:08:48	11:09:22	HSEA	10	0	60	1	1	None	RE			SSI	E	S	25	1	0-3 ft		
9/11/2013	CON	NA	11:34:53	11:35:13	HSEA	50	90	60	1	0	None	LO	SI		NONE	E	S	25	1	0-3 ft		seconds before impact
9/11/2013	CON	NA	11:45:38	11:49:00	HSEA	100	90	50	1	1	None	RE	DI		NONE	E	S	25	1	0-3 ft		nose up, resting. Immediarely after impact
9/11/2013	CON	NA	14:24:39	14:24:45	HSEA	35	45		1	1	Toward	SW-SW	DI		NONE	E	S	0	0	0-3 ft		
9/11/2013	CON	NA	14:32:25	14:32:41	HSEA	5	80	35	3	2	Away	SW-NE	LO	DI	NONE	E	S	20	1	0-3 ft		observed swimming NE. came from under rig then surfaced looked at observer and dove
9/11/2013	CON	NA	14:46:32	14:46:36	HSEA	75	270		1	0	Away	SW-NW	DI		NONE	E	S	25	1	0-3 ft		
9/11/2013	CON	NA	15:04:15	15:04:31	HSEA	250	100	275	2	1	Away	LO	DI		NONE	E	S	0	1	0-3 ft		
9/11/2013	CON	NA	15:12:45	15:13:31	HSEA	300	120	200	1	0	Away	SW-S	DI		NONE	E	S	25	1	0-3 ft		
9/11/2013	CON	NA	15:18:43	15:18:49	HSEA	350	140		1	1	Toward	SW-N			NONE	E	S	25	0	0-3 ft		Possibly animal in sighting 14
9/11/2013	CON	NA	15:34:08	15:37:09	HSEA	325	100		1	1	Away	SW-S			NONE	E	S	25	1	0-3 ft		
9/11/2013	CON	NA	15:51:51	15:52:37	HSEA	15	160		1	0	Toward	SW-NW	DI		NONE	E	S	25	1	0-3 ft		

Date	Event Code	Pile	Start Time	End Time	Species	Dist. To animal (m)	Dir. To animal (deg)	Dist to pile (m)	Best num of animals	Num of juv	Relative motion	Behavior 1	Behavior 2	Behavior 3	Const Type	Visi-bility	Weather	Glare (%)	BSS	Wave ht	Swell Dir	Comments
9/11/2013	CON	R-13	16:06:19	16:06:26	HSEA	25	260	45	1	1	Parallel	LO	DI		NONE	E	S	20	1	0-3 ft		lifting R-13
9/11/2013	CON	R-13	16:12:03	16:12:05	HSEA	200	110	200	1	0	Parallel	SW-N			NONE	E	S	0	1	0-3 ft		
9/11/2013	CON	NA	16:51:58	16:52:53	HSEA	100	160	100	1	0	Away	SW-S			NONE	E	S	25	1	0-3 ft		
9/11/2013	OTHR	NA	17:09:11	17:11:11	CASL	70	270		19	19	None	HO			OTHER	E	S	25	1	0-3 ft		Most animals hauled out between bouys 6 and 7 on WRA fence
9/12/2013	PRE	NA	8:18:06	8:19:18	HSEA		90		2		Toward	SW-S			NONE	E	F	0	1	0-3 ft		
9/12/2013	CON	NA	8:20:24	8:20:29	HSEA	35	140		1		Parallel	LO	SW-W		NONE	E	F	0	1	0-3 ft		This was one of the same seals as sighting 2
9/12/2013	CON	NA	8:32:08	8:32:56	HSEA	90	180		1		Toward	RE	SW-E		NONE	G	F	0	1	0-3 ft		
9/12/2013	CON	NA	9:16:28	9:16:54	HSEA	25	180		1		None	LO			NONE	G	F	0	1	0-3 ft		
9/12/2013	CON	NA	9:31:05	9:31:18	HSEA	5	112	50	1	0	None	RE	SI		NONE	P	F	0	0	0-3 ft		
9/12/2013	CON	NA	9:39:46	9:39:52	HSEA	10	90		1		Away	SW-N			NONE	G	F	0	1	0-3 ft		
9/12/2013	CON	NA	9:48:08	9:48:21	HSEA	30	270		1		None	LO			NONE	G	F	0	1	0-3 ft		
9/12/2013	CON	J-13	10:06:20	10:06:47	HSEA	110	180	200	1		Toward	SW-E			NONE	G	OC	0	1	0-3 ft		
9/12/2013	CON	J-13	10:27:33	10:27:42	HSEA	50	270	150	1		Parallel	SW-N			NONE	G	OC	0	1	0-3 ft		
9/12/2013	CON	V-23	10:32:03	10:32:09	HSEA	30	180	180	1		Away	SW-N			SSI	G	OC	0	1	0-3 ft		animal on east side of rig; pile on west side
9/12/2013	CON	V-24	10:59:40	10:59:53	HSEA	40	270	200	1		Toward	SW-NE			I	G	OC	10	1	0-3 ft		
9/12/2013	CON	R-23	11:15:34	11:16:20	HSEA	70	340	85	1	1	Toward	LO	DI		NONE	E	S	0	1	0-3 ft		
9/12/2013	CON	R-23	11:24:25	11:24:47	HSEA	40	180	200	1		Away	SW-S			NONE	G	PC	10	1	0-3 ft		
9/12/2013	CON	R-23	11:28:41	11:28:46	HSEA	125	350	70	1	1	Away	SW-N			I	E	S	0	0	0-3 ft		same as suzanne sighting 11
9/12/2013	CON	R-23	11:30:48	11:30:58	HSEA	120	350	40	1	1	Toward	SW-S	DI		I	E	S	0	0	0-3 ft		
9/12/2013	CON	NA	11:37:44	11:37:50	HSEA	120	350	45	1	1	None	MI			NONE	E	S	0	0	0-3 ft		
9/12/2013	CON	NA	11:41:34	11:42:05	HSEA	5	115	60	1	1	None	MI	SI		NONE	E	S	0	0	0-3 ft		
9/12/2013	CON	T-22	11:43:18	11:43:36	HSEA	30	180	220	1	1	Away	SW-N	LO	DI	NONE	G	S	5	1	0-3 ft		
9/12/2013	CON	T-22	12:16:24	12:16:29	HSEA	25	180	450	1	1	Parallel	RE	DI		NONE	G	S	5	1	0-3 ft		At marginal dock to grab something
9/12/2013	CON	X-12	13:05:00	13:05:16	HSEA	30	30	60	1		Away	SW-SW	LO		V	G	S	5	1	0-3 ft		
9/12/2013	CON	X-12	13:12:35	13:12:50	HSEA	45	180	110	1		Away	SW-SW			NONE	G	S	5	1	0-3 ft		
9/12/2013	CON		13:22:19	13:22:24	HSEA	50	270		1	1	Away	SW-E			NONE	G	S	15	1	0-3 ft		
9/12/2013	CON	X-21	14:01:45	14:02:15	HSEA	25	290	68	1		Away	SW-N	SW-SE	DI	NONE	G	S	10	1	0-3 ft		
9/12/2013	CON	T-21	14:30:00	14:30:13	HSEA	30	90	70	1		Parallel	RE	DI		NONE	G	S	10	1	0-3 ft		
9/12/2013	CON	T-12	14:49:52	14:49:58	HSEA	90	70	190	1		Away	SW-W			V	G	S	10	1	0-3 ft		
9/12/2013	CON		14:57:09	14:57:13	HSEA	70	90		1		Toward	SW-E			NONE	G	S	10	1	0-3 ft		

Date	Event Code	Pile	Start Time	End Time	Species	Dist. To animal (m)	Dir. To animal (deg)	Dist to pile (m)	Best num of animals	Num of juv	Relative motion	Behavior 1	Behavior 2	Behavior 3	Const Type	Visi-bility	Weather	Glare (%)	BSS	Wave ht	Swell Dir	Comments
9/12/2013	CON	NA	15:27:05	15:27:33	HSEA	60	90	50	1	1	None	RE	SI		NONE	E	S	10	0	0-3 ft		
9/12/2013	CON		16:07:03	16:07:28	HSEA	30	180		1		None	LO	DI		NONE	G	S	10	2	0-3 ft		
9/12/2013	POST		16:46:23	16:46:28	HSEA	100	150		1		None	LO	DI		NONE	G	S	10	2	0-3 ft		
9/12/2013	OTHR		17:02:13	17:06:14	CASL				16						OTHER	G	S	20	2	0-3 ft		Count of animals hauled out on perimeter fence
9/13/2013	PRE	NA	9:17:20	9:38:11	HSEA	100	5		1	0	Toward	LO	SI		NONE	G	F	0	1	0-3 ft		Same animal looking and diving several times
9/13/2013	CON	NA	9:39:16	9:39:43	HSEA	200	120		1	0	None	LO	DI		NONE	G	F	0	1	0-3 ft		
9/13/2013	CON	NA	9:41:43	9:42:11	HSEA	10	45		2	1	None	LO	DI		NONE	G	F	0	1	0-3 ft		
9/13/2013	CON	NA	9:49:43	9:59:37	HSEA	325	20		1	0	None	DI			NONE	G	F	0	1	0-3 ft		
9/13/2013	CON	NA	10:05:32	10:05:50	HSEA	214	0		1	0	None	LO	SI		NONE	G	F	0	1	0-3 ft		
9/13/2013	CON	NA	10:20:36	10:21:24	HSEA	215	180		1	0	Parallel	LO	DI		NONE	G	F	0	1	0-3 ft		
9/13/2013	CON	NA	10:44:45	10:45:06	HSEA	10	45		1	1	Parallel	SW-N	LO	DI	NONE	G	F	0	1	0-3 ft		
9/13/2013	CON	NA	10:51:26	10:54:10	HSEA	25	270		2	0	None	LO	DI		NONE	G	F	0	1	0-3 ft		Bubble curtain on but no hammering yet
9/13/2013	CON	NA	10:57:02	10:57:06	HSEA	200	180		1	0	None	LO	DI		NONE	G	F	0	1	0-3 ft		
9/13/2013	CON	NA	11:03:51	11:04:41	HSEA	50	45	50	1	0	Toward	LO	DI		NONE	G	F	0	1	0-3 ft		
9/13/2013	CON	NA	13:04:16	13:04:28	HSEA	78	150		1	0	Away	RE	SI		NONE	G	F	0	1	0-3 ft		
9/13/2013	CON	NA	13:27:34	13:29:16	HSEA	175	0		1	0	None	LO	SI		NONE	G	F	0	1	0-3 ft		
9/13/2013	CON	NA	13:42:42	13:42:45	HSEA	10	60	40	1		Parallel	SW-S	DI		NONE	G	OC	0	1	0-3 ft		
9/13/2013	CON	NA	13:47:20	13:50:10	HSEA	25	355	139	1	0	Toward	LO	DI		NONE	G	F	0	1	0-3 ft		
9/13/2013	CON	NA	14:06:41	14:07:30	HSEA	60	0	75	1	0	None	LO	SI		NONE	G	F	0	1	0-3 ft		
9/13/2013	CON	NA	14:26:22	14:26:29	HSEA	15	20		1	1	Away	SW-NW	SI		NONE	G	F	0	1	0-3 ft		
9/13/2013	CON	NA	14:29:51	14:30:00	HSEA	50	30	55	1	0	Toward	SW-NW	DI		NONE	G	F	0	1	0-3 ft		
9/13/2013	CON	S-38	14:32:55	14:33:00	HSEA	5	30	60	1		Parallel	LO	DI		NONE	G	OC	0	1	0-3 ft		
9/13/2013	CON	R-38	14:40:59	14:41:30	HSEA	200	199	225	1	0	Away	SW-N	DI		SSI	G	F	0	1	0-3 ft		
9/13/2013	CON	NA	15:26:30	15:26:44	HSEA	25	90		1	0	None	LO	DI		NONE	G	F	0	1	0-3 ft		
9/13/2013	CON	N-38	15:36:20	15:36:27	HSEA	45	75	100	1		Away	SW-NE			NONE	G	OC	10	1	0-3 ft		
9/13/2013	CON	NA	15:46:59	15:48:03	CASL	50	180	40	1	0	Away	SW-S	PO		NONE	G	F	0	1	0-3 ft		
9/13/2013	CON	NA	15:51:17	15:52:00	HSEA	25	270	50	1	0	None	LO	DI		NONE	G	F	0	1	0-3 ft		
9/13/2013	CON	NA	15:54:20	15:55:00	HSEA	100	0	125	1	1	None	LO	SI		NONE	G	F	0	1	0-3 ft		
9/13/2013	CON	N-38	15:58:30	15:58:45	HSEA	50	120	80	1	1	Parallel	SW-NE			NONE	G	OC	10	1	0-3 ft		

Date	Event Code	Pile	Start Time	End Time	Species	Dist. To animal (m)	Dir. To animal (deg)	Dist to pile (m)	Best num of animals	Num of juv	Relative motion	Behavior 1	Behavior 2	Behavior 3	Const Type	Visi-bility	Weather	Glare (%)	BSS	Wave ht	Swell Dir	Comments
9/13/2013	CON	NA	16:00:46	16:01:25	HSEA	70	270	25	1	0	Toward	SW-N			NONE	G	F	0	1	0-3 ft		
9/13/2013	CON	N-38	16:06:59	16:07:04	HSEA	100	0	50	1	1	Toward	SW-N	DI		SSI	G	F	0	1	0-3 ft		
9/13/2013	CON	L-38	16:39:17	16:39:34	HSEA	50	270	75	1	1	Away	LO	DI		I	G	F	0	1	0-3 ft		
9/13/2013	POST		17:20:10	17:20:12	HSEA	30	90		1		Away	SW-NE	DI		NONE	G	OC	10	1	0-3 ft		
9/16/2013	PRE		9:05:49	9:10:05	HSEA	56	210	50	1	0	None	LO	SI		NONE	G	OC	0	2	0-3 ft		preparing equipment for impact; dist to pile=dist to pile area, recorded by DS
9/16/2013	CON	X-15	10:40:25	10:41:05	HSEA	200	90	250	2		Parallel	SW-N	LO		I	G	OC	0	2	0-3 ft		traveling north parallel to beach, lost sight - on transect
9/16/2013	CON	X-15	10:56:19	10:56:24	HSEA	60	110		1		Parallel	SW-S			NONE	G	OC	0	2	0-3 ft		
9/16/2013	CON	X-14	11:13:23	11:15:44	HSEA	76	90	90	1	0	Parallel	SW-N	SI		NONE	G	OC	10	1	0-3 ft		preparig pile for impact
9/16/2013	CON	X-14	11:33:27	11:34:14	HSEA	100	90	250	2		Parallel	SW-S	LO		I	G	OC	0	2	0-3 ft		first seal sighted between ss and impact, dove as impact began, second seal was traveling south along shore during impact looking then dove
9/16/2013	CON	X-14	11:41:18	11:41:53	HSEA	200	90	250	1		Parallel	SW-S	LO		NONE	G	OC	0	2	0-3 ft		lost sight-on transect , seal sighted between impact, surveying pile
9/16/2013	CON	X-14	11:44:48	11:44:55	HSEA	170	150	275	1		Parallel	SW-S			I	G	OC	0	2	0-3 ft		
9/16/2013	CON	X-13	12:49:44	13:00:28	HSEA	252	90	258	1	0	Parallel	SW-S	SI	SW-N	I	G	OC	10	1	0-3 ft		seal sw s then changed directions during impact; at 12:57 sighted swimming south; sighted again at 13:00 swimmig further south toward marginal
9/16/2013	CON	X-13	13:00:50	13:04:01	HSEA	254	90	268	1	0	None	LO	RE	SI	I	G	L	10	1	0-3 ft		
9/16/2013	CON	X-12	13:15:06	13:20:34	HSEA	50	90	60	1	0	None	LO	RE	SI	NONE	G	L	10	1	0-3 ft		sighted under surveyor stand
9/16/2013	CON		13:28:17	13:28:20	CASL	50	0	250	1		None	DI			NONE	G	R	0	2	0-3 ft		very brief sughting then dove facing west
9/16/2013	CON	V-15	13:32:06	13:35:44	CASL	300	270	500	2		None	BR	PL		I	G	R	0	2	0-3 ft		breaching repeatedly, appeared to be 2 animals, possibly playing? Breaching for approx 3 minutes in the same area, did not appear to be traveling, lost sight as boat made transect, likely one individual from sighting #6
9/16/2013	CON	V-14	14:23:03	14:26:19	HSEA	265	87	267	1	0	Away	LO	SI		I	G	L	10	1	0-3 ft		
9/16/2013	CON	V-14	14:35:58	14:37:29	HSEA	278	103	285	1	0	None	LO	SI	SW-S	I	G	L	10	1	0-3 ft		swimming towards white stump.
9/16/2013	CON	V-13	14:54:45	14:56:50	HSEA	49	0	30	1	0	None	LO	SI		I	G	L	10	1	0-3 ft		
9/16/2013	CON	V-13	15:06:23	15:13:29	HSEA	269	90	278	1	0	None	LO	RE	DI	I	G	L	10	1	0-3 ft		along bank sighted during impact
9/16/2013	CON	V-12	15:53:33	15:53:44	HSEA	60	70	220	1	1	None	RE	DI		I	G	R	0	2	0-3 ft		
9/17/2013	PRE	NA	7:43:52	7:44:31	HSEA	50	110		1		None	LO	SI		NONE	G	OC	0	1	0-3 ft		
9/17/2013	PRE	NA	7:50:06	7:50:24	HSEA	250	0		1		None	LO	SI		NONE	G	OC	0	1	0-3 ft		

Date	Event Code	Pile	Start Time	End Time	Species	Dist. To animal (m)	Dir. To animal (deg)	Dist to pile (m)	Best num of animals	Num of juv	Relative motion	Behavior 1	Behavior 2	Behavior 3	Const Type	Visi-bility	Weather	Glare (%)	BSS	Wave ht	Swell Dir	Comments
9/17/2013	PRE	NA	7:52:34	7:52:39	HSEA	70	75		1		None	MI	DI		NONE	G	OC	0	1	0-3 ft		Side of head very white
9/17/2013	PRE	NA	7:55:31	7:56:04	HSEA	20	90		1	1	None	LO	SI		NONE	G	OC	0	1	0-3 ft		
9/17/2013	PRE	NA	7:57:29	7:57:32	HSEA	200	135		1		None	LO	SI		NONE	G	OC	0	1	0-3 ft		
9/17/2013	PRE	NA	7:59:00	7:59:12	HSEA	250	120		1		None	MI	LO	SI	NONE	G	OC	0	1	0-3 ft		
9/17/2013	PRE	NA	8:02:45	8:02:51	HSEA	35	100		1		None	LO	SI		NONE	G	OC	0	1	0-3 ft		Reddish head
9/17/2013	PRE	NA	8:07:57	8:08:19	HSEA	80	90		1		None	LO	SI		NONE	G	OC	0	1	0-3 ft		
9/17/2013	PRE	NA	8:09:49	8:10:05	HSEA	50	180		1	1	None	LO	SI		NONE	G	OC	0	1	0-3 ft		Small, dark individual
9/17/2013	CON	NA	8:12:45	8:12:52	HSEA	15	205		1	1	None	LO	SI		NONE	G	OC	0	1	0-3 ft		Looking at vessel
9/17/2013	CON	NA	8:20:04	8:20:33	HSEA	275	90		1		None	FO			NONE	G	OC	0	1	0-3 ft		Appeared to be foraging, moving rapidly in one area, lots of fish around
9/17/2013	CON	NA	8:32:49	8:32:52	HSEA	50	90		1		None	LO	SI		NONE	G	OC	0	1	0-3 ft		
9/17/2013	CON	NA	8:33:51	8:33:53	HSEA	60	180		1		None	RE	LO	SI	NONE	G	OC	0	1	0-3 ft		
9/17/2013	CON	NA	8:36:37	8:36:41	HSEA	15	35		1	1	None	LO	SI		NONE	G	OC	0	1	0-3 ft		Small dark individual
9/17/2013	CON	NA	8:38:56	8:39:34	HSEA	100	90		2		None	RE	SI		NONE	G	OC	0	1	0-3 ft		2 animals resting approx 100 m apart
9/17/2013	CON	NA	8:41:25	8:41:30	HSEA	35	80		1		None	SI			NONE	G	OC	0	1	0-3 ft		
9/17/2013	CON	NA	8:43:19	8:44:10	HSEA	200	270		1		None	RE	SI		NONE	G	OC	0	1	0-3 ft		Larger pale individual
9/17/2013	CON	NA	8:50:06	8:50:10	HSEA	250	129		1		None	SW-S	SI		NONE	G	OC	0	1	0-3 ft		
9/17/2013	CON	NA	9:10:39	9:10:43	HSEA	70	90		1		None	LO	SI		NONE	G	OC	0	1	0-3 ft		
9/17/2013	CON	NA	9:39:21	9:39:52	HSEA	220	45		1		None	MI	SI		NONE	G	OC	0	1	0-3 ft		
9/17/2013	CON	NA	9:47:36	9:48:02	HSEA	25	0		1	1	None	FO	LO	SI	NONE	G	OC	0	1	0-3 ft		Appeared to be foraging, moving swiftly just under surfare in circles, surfaced looking then sank
9/17/2013	CON	X-12	9:49:57	9:51:59	HSEA	158	90	137	1	0	Parallel	SW-N			NONE	G	OC	0	1	0-3 ft		preparing bubble curtain around pile
9/17/2013	CON	NA	9:57:41	9:57:50	HSEA	180	220		1		None	LO	SI		NONE	G	OC	0	1	0-3 ft		
9/17/2013	CON	X-12	10:13:17	10:16:50	HSEA	257	160	270	1	0	None	LO	SI	SW-N	I	G	OC	0	1	0-3 ft		vessel observer potentially sighted it; sighted again sw-n 10:16
9/17/2013	CON	X-12	10:16:27	10:16:45	HSEA	140	0	375	1		Away	SW-NE	SI		I	G	OC	0	1	0-3 ft		
9/17/2013	CON	NA	10:22:01	10:22:12	HSEA	100	35		1		Toward	SW-SE	LO	SI	NONE	G	OC	0	1	0-3 ft		
9/17/2013	CON	NA	10:26:31	10:26:45	HSEA	50	90		1		Toward	SW-E	LO	SI	NONE	G	OC	0	1	0-3 ft		
9/17/2013	CON	T-12	10:29:24	10:32:37	HSEA	246	115	267	1	0	None	LO	SI		NONE	G	OC	0	1	0-3 ft		hammer is on the pile, seal sighted near white snag;
9/17/2013	CON	NA	10:35:43	10:35:54	HSEA	80	85		1		Away	SW-S	LO	SI	NONE	G	OC	0	1	0-3 ft		

Date	Event Code	Pile	Start Time	End Time	Species	Dist. To animal (m)	Dir. To animal (deg)	Dist to pile (m)	Best num of animals	Num of juv	Relative motion	Behavior 1	Behavior 2	Behavior 3	Const Type	Visi-bility	Weather	Glare (%)	BSS	Wave ht	Swell Dir	Comments
9/17/2013	CON	T-12	10:36:06	10:38:16	HSEA	248	110	269	1	0	None	RE	DI	SW-N	I	G	OC	0	1	0-3 ft		sighted before impact and during near white snag
9/17/2013	CON	T-12	10:46:11	10:49:00	HSEA	40	100	70	1	1	None	LO	SI		I	G	OC	0	1	0-3 ft		sighted on southeast corner of rig on side; later surfaced milling further south of rig
9/17/2013	CON	T-12	10:51:28	10:51:34	HSEA	110	80	65	1		Toward	SW-E	SI		I	G	OC	0	1	0-3 ft		
9/17/2013	CON	T-12	10:56:34	10:57:02	HSEA	49	90	69	1	0	Parallel	SW-N	DI		NONE	G	OC	0	1	0-3 ft		just finished driving pile
9/17/2013	CON	NA	10:56:40	10:57:16	HSEA	60	90		2		None	MI	LO	SI	NONE	G	OC	0	1	0-3 ft		2 sighted just after impact stopped just south of barges, likely one of ind from sighting 23
9/17/2013	CON	NA	11:08:44	11:08:50	HSEA	70	270		1		None	RE	SI		NONE	G	OC	0	1	0-3 ft		Resting in piles north of rig 1, seal was approx 80 m from pile about to
9/17/2013	CON	R-12	11:19:06	11:19:27	HSEA	70	95	75	1	1	None	LO	SI		I	G	OC	0	1	0-3 ft		
9/17/2013	CON	NA	11:33:07	11:33:11	HSEA	15	270		1	1	None	DI			NONE	G	OC	0	1	0-3 ft		
9/17/2013	CON	M-12	11:39:20	11:51:25	HSEA	55	0	45	1	0	Parallel	SW-W	DI	SW-E	I	G	OC	0	1	0-3 ft		pacing east to west just outside the white spill ring
9/17/2013	CON	M-12	11:45:48	11:46:05	HSEA	50	90	95	1		None	LO	SI		I	G	OC	0	1	0-3 ft		
9/17/2013	CON	M-12	11:47:42	11:47:44	HSEA	80	270	80	1		None	LO			I	G	OC	0	1	0-3 ft		in piles approx 80 m from impact pile
9/17/2013	CON	T-13	12:44:33	12:48:59	HSEA	265	90	280	1	0	None	RE	DI		NONE	G	OC	0	1	0-3 ft		putting hammer on the pile; sighted from eastern side of rig
9/17/2013	CON	T-13	12:48:51	12:48:52	HSEA	50	0	35	1	0	None	DI			SSI	G	OC	0	1	0-3 ft		
9/17/2013	CON	T-13	12:49:27	12:49:33	HSEA	5	0	110	1		None	SI			SSI	G	OC	0	1	0-3 ft		
9/17/2013	CON	T-13	12:57:07	13:01:08	HSEA	53	260	55	1	0	None	LO	SI		I	G	OC	0	1	0-3 ft		sighting located on northwest corner of rig 1; potentially same seal as previous
9/17/2013	CON	T-13	12:57:40	12:57:43	HSEA	30	160	200	1	1	None	LO	SI		I	G	OC	0	1	0-3 ft		likely same ind as #30
9/17/2013	CON	T-13	13:01:32	13:01:34	HSEA	267	110	278	1	0	Away	SW-S	DI		NONE	G	OC	0	1	0-3 ft		seal sighted along shoreline after impacting T-13
9/17/2013	CON	NA	13:12:25	13:12:37	HSEA	200	180		1		Parallel	SW-W			NONE	G	OC	0	1	0-3 ft		
9/17/2013	CON	R-13	13:14:11	13:14:13	HSEA	45	0	35	1	0	Away	LO	DI		NONE	G	OC	0	1	0-3 ft		putting hammer on the pile; possibly the same seal that has been hanging around
9/17/2013	CON	R-13	13:18:24	13:19:21	HSEA	190	90	250	1		Parallel	SW-S			I	G	OC	0	1	0-3 ft		
9/17/2013	CON	R-13	13:19:23	13:19:27	HSEA	10	180	100	1	1	Parallel	LO			I	G	OC	0	1	0-3 ft		
9/17/2013	CON	R-13	13:21:48	13:25:38	HSEA	268	98	287	1	0	Away	SW-S	DI		NONE	G	OC	0	1	0-3 ft		this is a resight Paula's 33; hammer was off
9/17/2013	CON	NA	13:23:24	13:23:29	HSEA	20	90		1	1	None	LO	SI		NONE	G	OC	0	1	0-3 ft		
9/17/2013	CON	R-13	13:32:06	13:32:08	HSEA	87	0	67	1	0	None	LO	SI		NONE	G	OC	0	1	0-3 ft		possibly the same indv. Hanging around the pile area
9/17/2013	CON	NA	13:32:22	13:32:26	HSEA	25	180		1		Toward	SW-S	LO		NONE	G	OC	0	1	0-3 ft		
9/17/2013	CON	R-13	13:36:13	13:36:16	HSEA	30	280	130	1	1	None	LO	SI		I	G	OC	0	1	0-3 ft		
9/17/2013	CON	NA	13:51:32	13:51:35	HSEA	25	90		1		None	LO	SI		NONE	G	OC	0	1	0-3 ft		

Date	Event Code	Pile	Start Time	End Time	Species	Dist. To animal (m)	Dir. To animal (deg)	Dist to pile (m)	Best num of animals	Num of juv	Relative motion	Behavior 1	Behavior 2	Behavior 3	Const Type	Visi-bility	Weather	Glare (%)	BSS	Wave ht	Swell Dir	Comments
9/17/2013	CON	J-13	14:03:51	14:05:54	HSEA	100	90	136	1	0	Parallel	SW-S	DI		NONE	G	OC	0	1	0-3 ft		swimming south between shoreline and surveyor stand; placing bubble curtain on pile
9/17/2013	CON	NA	14:04:39	14:04:44	HSEA	40	350		1	0	Away	SW-W			NONE	G	OC	0	1	0-3 ft		
9/17/2013	CON	NA	14:07:30	14:09:27	HSEA	35	0		1	1	Toward	SW-N			NONE	G	OC	0	1	0-3 ft		
9/17/2013	CON	NA	14:12:45	14:12:53	HSEA	20	180		1	1	Toward	LO			NONE	G	OC	0	1	0-3 ft		
9/17/2013	CON	J-13	14:14:54	14:16:02	HSEA	220	110	280	1		Away	SW-S			I	G	OC	0	1	0-3 ft		
9/17/2013	CON	J-13	14:16:11	14:16:15	HSEA	80	300	150	1		Away	SW-N			I	G	OC	0	1	0-3 ft		
9/17/2013	CON	J-13	14:16:35	14:22:32	HSEA	70	0	86	1	0	None	MI	LO	SI	I	G	OC	0	1	0-3 ft		possibly the same indv. Hanging around the pile area; same as Paula's sighting 40
9/17/2013	CON	J-13	14:19:10	14:20:00	HSEA	310	45	250	1		Parallel	SW-S			I	G	OC	0	1	0-3 ft		pale ind
9/17/2013	CON	J-13	14:23:06	14:24:06	HSEA	150	135	250	1		Away	SW-S	LO		I	G	OC	0	1	0-3 ft		sighted during impact, still at surface when impact ended
9/17/2013	CON	NA	14:32:40	14:34:38	HSEA	290	100		1	0	Parallel	SW-N	SI		NONE	G	OC	0	1	0-3 ft		
9/17/2013	CON	NA	14:37:51	14:38:17	HSEA	45	30		1		None	LO			NONE	G	OC	0	1	0-3 ft		
9/17/2013	CON	NA	14:38:19	14:38:21	HSEA	40	150		1		None	LO	SI		NONE	G	OC	0	1	0-3 ft		
9/17/2013	CON	NA	14:40:44	14:40:45	HSEA	45	80		1		None	SW-N	SI		NONE	G	OC	0	1	0-3 ft		
9/17/2013	CON	T-14	14:42:42	14:42:48	HSEA	60	80	80	1		None				I	G	OC	0	1	0-3 ft		
9/17/2013	CON	T-15	15:09:45	15:10:15	HSEA	100	0	70	1	0	Away	SW-E	LO	DI	I	G	OC	0	1	0-3 ft		
9/17/2013	CON	T-15	15:11:57	15:11:59	HSEA	10	90	100	1	1	None	LO	SI		I	G	OC	0	1	0-3 ft		
9/17/2013	CON	R-14	15:27:10	15:32:51	HSEA	275	100	300	1	0	Away	SW-SE	DI		NONE	G	OC	0	1	0-3 ft		along shoreline near white snag
9/17/2013	CON	NA	15:59:49	15:59:52	HSEA	50	0		1		None	SI			NONE	G	OC	0	1	0-3 ft		
9/17/2013	CON	NA	16:00:34	16:00:36	HSEA	100	145		1		Toward	DI			NONE	G	OC	0	1	0-3 ft		
9/17/2013	CON	NA	16:13:43	16:13:56	HSEA	250	170		1		None	LO	SI		NONE	G	PC	5	1	0-3 ft		
9/17/2013	CON	NA	16:17:56	16:18:00	HSEA	100	180		1		None	RE	LO	SI	NONE	G	PC	5	1	0-3 ft		
9/17/2013	CON	NA	16:20:52	16:20:55	HSEA	30	160		1		None	LO	SI		NONE	G	PC	5	1	0-3 ft		
9/17/2013	CON	NA	16:24:00	16:24:03	HSEA	20	270		1		None	LO	SI		NONE	G	PC	5	1	0-3 ft		
9/17/2013	OTHR	NA	16:36:28	16:40:38	CASL				22		None	RE			OTHER	G	PC	0	1	0-3 ft		2 hauled out on vessel, 20 hauled our on wra fence
9/18/2013	PRE	NA	7:40:38	7:43:49	HSEA	50	89	100	1	0	None	LO	DI		NONE	E	S	25	1	0-3 ft		
9/18/2013	PRE	NA	8:00:53	8:01:29	HSEA	100	90		1	1	None	MI	SI		NONE	E	PC	25	1	0-3 ft		
9/18/2013	PRE	NA	8:06:57	8:07:48	CASL	120	180		1		Away	SW-S	LO	DI	NONE	E	PC	25	1	0-3 ft		Moving toward Delta
9/18/2013	PRE	NA	8:26:17	8:26:26	HSEA	100	0		1		None	RE	LO	SI	NONE	E	PC		1	0-3 ft		
9/18/2013	CON		8:36:28	8:36:34	HSEA	50	300		1	0	Toward	SW-E			NONE	G	PC	0	1	0-3 ft		

Date	Event Code	Pile	Start Time	End Time	Species	Dist. To animal (m)	Dir. To animal (deg)	Dist to pile (m)	Best num of animals	Num of juv	Relative motion	Behavior 1	Behavior 2	Behavior 3	Const Type	Visi-bility	Weather	Glare (%)	BSS	Wave ht	Swell Dir	Comments
9/18/2013	CON	NA	8:36:58	8:44:09	HSEA	130	180		1	1	None	RE	LO	SI	NONE	E	PC		1	0-3 ft		
9/18/2013	CON	NA	8:41:32	8:41:48	HSEA	135	170		1	0	Away	SW-S	DI		NONE	E	PC	0	1	0-3 ft		
9/18/2013	CON	NA	8:45:44	8:45:59	HSEA	100	180	100	1		None	LO	SI		NONE	E	PC	0	1	0-3 ft		
9/18/2013	CON	NA	8:47:43	8:49:58	HSEA	80	350		1		Parallel	SW-N	LO	SI	NONE	E	PC	0	1	0-3 ft		
9/18/2013	CON	NA	8:52:04	8:52:18	HSEA	125	110		1		Away	SW-S	LO	SI	NONE	E	PC	0	1	0-3 ft		
9/18/2013	CON	J-12	8:54:49	8:54:59	HSEA	35	95	20	1	0	Away	SW-N			V	G	PC	0	1	0-3 ft		
9/18/2013	CON	J-12	8:58:13	8:58:19	HSEA	60	70	50	1	0	None	LO	SI		V	G	PC	0	1	0-3 ft		
9/18/2013	CON	J-12	8:59:38	9:00:01	HSEA	160	60	100	1		None				V	E	PC	0	1	0-3 ft		
9/18/2013	CON	NA	9:19:14	9:19:28	HSEA	160	135		1		None	MI	LO		NONE	E	PC	0	1	0-3 ft		
9/18/2013	CON	NA	9:23:06	9:23:25	HSEA	100	150		1		None	MI	LO	SI	NONE	E	PC	0	1	0-3 ft		
9/18/2013	CON		9:23:31	9:23:45	HSEA	50	90	40	1	0	Toward	SW-SW	LO	SI	NONE	G	PC	0	1	0-3 ft		
9/18/2013	CON	NA	9:30:28	9:30:43	HSEA	145	120		1		None	LO	SI		NONE	E	PC	0	1	0-3 ft		
9/18/2013	CON	NA	9:32:19	9:32:24	HSEA	250	140		1		Parallel	SW-N			NONE	E	PC	0	1	0-3 ft		Moving north along beach, pale individual
9/18/2013	CON		9:34:06	9:34:13	HSEA	45	45	40	1	0	Away	SW-NW			NONE	G	PC	0	1	0-3 ft		
9/18/2013	CON		9:35:01	9:35:31	HSEA	80	180	100	1	0	None	RE	SI		NONE	G	PC	0	1	0-3 ft		
9/18/2013	CON	NA	9:36:39	9:37:01	HSEA	40	260		1	1	Parallel	SW-N	LO	SI	NONE	E	PC	0	1	0-3 ft		Very silver face 7 neck, few spots, black ring around R eye
9/18/2013	CON	NA	9:46:11	9:50:09	HSEA	250	135		1		None	RE	LO	SI	NONE	E	PC	0	1	0-3 ft		Pale individual, sank then resurfaced
9/18/2013	CON	NA	9:53:45	9:55:44	HSEA	55	95		1		None	LO	SI		NONE	E	PC	0	1	0-3 ft		Just outside of piles then sank, resurfaced milling in piles then sank again
9/18/2013	CON		10:02:27	10:02:34	HSEA	50	45	40	1	0	Toward	SW-S			NONE	G	PC	0	1	0-3 ft		
9/18/2013	CON	NA	10:04:14	10:04:45	HSEA	170	150		1		Away	SW-S	LO	SI	NONE	E	PC	0	1	0-3 ft		
9/18/2013	CON	NA	10:15:26	10:16:48	HSEA	100	350		1		Away	SW-NW	LO	SI	NONE	E	PC	0	1	0-3 ft		Resurfaced twice still moving NNW
9/18/2013	CON		10:24:52	10:24:58	HSEA	35	340	45	1	0	Away	SW-E			NONE	G	PC	0	1	0-3 ft		
9/18/2013	CON		10:28:27	10:29:50	HSEA	145	80	135	2	0	Away	SW-N	SI		NONE	G	PC	0	1	0-3 ft		
9/18/2013	CON		10:32:07	10:33:45	HSEA	60	350	70	1	1	Away	FL	RE		NONE	G	PC	0	1	0-3 ft		Juvenile floating-resting in between piles near divers
9/18/2013	CON		10:36:49	10:37:02	HSEA	75	45	65	1	0		SW-W			NONE	G	PC	0	1	0-3 ft		
9/18/2013	CON	NA	10:47:24	10:51:59	HSEA	47	200		1	0	Away	LO	DI		NONE	G	OC	0	1	0-3 ft		Sighted swimming around pile N-35
9/18/2013	CON	NA	10:49:17	10:49:52	HSEA	80	180		1	1	None	LO	SI		NONE	E	PC	0	1	0-3 ft		
9/18/2013	CON	NA	10:53:53	10:53:59	HSEA	85	95		1		None	LO	SI		NONE	E	PC	0	1	0-3 ft		
9/18/2013	CON		10:54:47	10:54:53	HSEA	10	270	43	1	0	None	LO	SI		NONE	G	PC	0	1	0-3 ft		Many white spots on face

Date	Event Code	Pile	Start Time	End Time	Species	Dist. To animal (m)	Dir. To animal (deg)	Dist to pile (m)	Best num of animals	Num of juv	Relative motion	Behavior 1	Behavior 2	Behavior 3	Const Type	Visi-bility	Weather	Glare (%)	BSS	Wave ht	Swell Dir	Comments
9/18/2013	CON	NA	10:57:30	10:57:46	HSEA	75	95	75	1	1	Away	SW-N	LO	SI	NONE	E	PC	0	1	0-3 ft		surfaced during a pause in vibe of X11
9/18/2013	CON	NA	11:36:39	12:07:58	HSEA	35	260		1	0	Away	DI	LO	SW-SW	NONE	G	OC	0	1	0-3 ft		
9/18/2013	CON	NA	11:38:21	11:38:38	HSEA	70	100		1	1	Parallel	LO	DI		NONE	E	PC	0	1	0-3 ft		Dove facing south
9/18/2013	CON	NA	11:47:54	11:51:40	HSEA	120	160		1	1	None	LO	SI		NONE	E	PC	0	1	0-3 ft		Sightings #20-22 probably same seal, resurfaced in same general area milling, looking
9/18/2013	CON	NA	11:56:04	11:56:24	HSEA	30	95		1		Toward	SW-E	LO	SI	NONE	E	PC	0	1	0-3 ft		Larger individual, moderately spotted head
9/18/2013	CON	NA	12:22:09	12:22:14	HSEA	130	160		1		Parallel	LO	SI		NONE	E	PC	0	1	0-3 ft		
9/18/2013	CON	NA	12:23:15	12:23:38	HSEA	230	125		1		Away	SW-S	DI		NONE	E	PC	0	1	0-3 ft		
9/18/2013	CON	NA	12:25:10	12:25:18	HSEA	50	180		1		Parallel	SW-S	LO	SI	NONE	E	PC	0	1	0-3 ft		
9/18/2013	CON	NA	12:29:20	12:45:07	HSEA	60	200		2	1	None	MI	LO	DI	NONE	G	OC	0	1	0-3 ft		
9/18/2013	CON	NA	12:36:03	12:36:09	HSEA	45	0		1		None	LO	SI		NONE	E	PC	0	1	0-3 ft		
9/18/2013	CON		12:37:09	12:37:14	HSEA	75	260	85	1	0	None	LO	SI		NONE	G	S	0	1	0-3 ft		
9/18/2013	CON	NA	12:40:17	12:40:35	HSEA	85	345		1	1	None	LO	SI		NONE	E	PC	0	1	0-3 ft		Very dark head
9/18/2013	CON	NA	12:47:52	12:48:18	HSEA	40	0		1		Away	SW-N	LO	SI	NONE	E	PC	0	1	0-3 ft		Larger individual, yellowish head heavily spotted (very small spots)
9/18/2013	CON	T-11	12:51:32	12:52:56	CASL	235	260	350	1		Parallel	TR-S			V	E	PC	0	1	0-3 ft		moving rapidly toward Delta
9/18/2013	CON	R-11	13:05:43	13:30:38	HSEA	20	275		1	0	Away	LO	DI		V	G	OC	0	1	0-3 ft		Sighted right next to pile J-37; moving/milling closer to observer vessel 13:20
9/18/2013	CON	NA	13:14:57	13:15:39	HSEA	50	200		1		Away	SW-SW	LO	SI	NONE	E	PC	0	1	0-3 ft		
9/18/2013	CON	NA	13:21:42	13:22:20	HSEA	70	95		1		None	RE	LO	DI	NONE	E	PC	0	1	0-3 ft		Larger almost entirely white individual, little spotting visible on dorsal when it dove
9/18/2013	CON	NA	13:26:54	13:26:55	HSEA	75	90		1		Parallel	LO	SI		NONE	E	PC	0	1	0-3 ft		
9/18/2013	CON	R-11	13:30:50	13:30:53	HSEA	25	90	110	1	1	Parallel	SW-N	LO	SI	V	E	PC	0	1	0-3 ft		
9/18/2013	CON	M-11	14:02:20	14:02:48	HSEA	30	25	150	1	1	Toward	SW-SW	DI		NONE	E	PC	0	1	0-3 ft		stabbing pile M11
9/18/2013	CON		14:37:17	14:37:25	HSEA	120	85	110	1	0	Away	SW-N			NONE	G	S	0	1	0-3 ft		
9/18/2013	CON		14:38:58	14:39:18	HSEA	55	35	30	1	0	Away	SW-NE			NONE	G	S	0	1	0-3 ft		
9/18/2013	CON	NA	14:45:56	14:54:17	HSEA	54	10		1	0	None	MI	LO	DI	NONE	G	OC	0	1	0-3 ft		Swimming under concrete surveyor stand north
9/18/2013	CON		14:47:43	14:47:58	HSEA	25	300	35	1	0	Toward	SW-SE	SI		NONE	G	S	0	1	0-3 ft		
9/18/2013	CON		14:52:08	14:52:19	HSEA	60	45	70	1	0	None	MI			NONE	G	S	0	1	0-3 ft		circling around pile near shore
9/18/2013	CON	NA	15:01:17	15:01:21	HSEA	30	290		1	1	None	LO	SI		NONE	E	PC	0	1	0-3 ft		

Date	Event Code	Pile	Start Time	End Time	Species	Dist. To animal (m)	Dir. To animal (deg)	Dist to pile (m)	Best num of animals	Num of juv	Relative motion	Behavior 1	Behavior 2	Behavior 3	Const Type	Visi-bility	Weather	Glare (%)	BSS	Wave ht	Swell Dir	Comments
9/18/2013	CON	J-11	15:05:27	15:15:33	HSEA	45	150		1		None	LO	SI		V	E	PC	0	1	0-3 ft		Prob resight of #35
9/18/2013	CON	J-11	15:06:26	15:06:35	HSEA	60	290	39	1	0	Toward	SW-S	LO		V	G	S	0	1	0-3 ft		
9/18/2013	CON	J-11	15:14:12	15:14:20	HSEA	30	15	55	1	1	Toward	LO	SI		V	G	S	0	1	0-3 ft		looked towards activity then sank
9/18/2013	CON		15:16:17	15:16:31	HSEA	40	25	60	1	1	Toward	SW-S	LO		NONE	G	S	0	1	0-3 ft		looked and swam at me N to S
9/18/2013	CON	J-11	15:17:47	15:18:00	HSEA	30	25	60	1	1	None	LO	DI		V	G	S	0	1	0-3 ft		Dove in respnse to noise of hammer turning on
9/18/2013	POST	NA	15:55:57	15:58:52	HSEA	50	5		1	0	Away	LO	DI		NONE	G	OC	0	1	0-3 ft		Close to EHW1 about 40m sw
9/18/2013	CON	NA	16:15:28	16:22:51	HSEA	45	90		1	1	None	LO	SI		NONE	E	PC	0	1	0-3 ft		Resurfaced again just north of vessel moving away from rig 1, resurfaced again still
9/19/2013	PRE	NA	8:23:25	8:24:16	CASL	50	90		1		Parallel	DI	LO	SW-S	NONE	P	F	0	1	0-3 ft		Slowly moving S along outside of piles
9/19/2013	CON	V.1-W8	8:27:41	8:50:16	HSEA	30	289	45	1	0	Toward	LO	RE	DI	NONE	B	F	0	1	0-3 ft		
9/19/2013	PRE	NA	8:30:12	8:30:52	HSEA	40	45		1		Toward	RE	SW-NE	SI	NONE	P	F	0	1	0-3 ft		Moving slowly toward piles
9/19/2013	PRE		8:31:56	8:32:55	HSEA	35	45	25	1	0	None	LO	DI		NONE	B	F	0	1	0-3 ft		Looked then quickly slapped head down to dive, swam South towards pile, fog is too thick to
9/19/2013	CON	NA	8:42:25	8:43:01	HSEA	40	30		1		None	RE	LO	DI	NONE	P	F	0	1	0-3 ft		Prob same ind as sighting #2
9/19/2013	CON	NA	9:06:44	9:07:44	HSEA	25	180		2	1	None	LO	SI		NONE	P	F	0	1	0-3 ft		2 ind approx 40m apart, resurfacing and generally moving away from rig 1
9/19/2013	CON	V.1-W8	9:08:00	9:20:05	HSEA	12	0	7	1	1	None	LO	DI		NONE	B	F	0	1	0-3 ft		Inside 10m from pile 9:08-9:17;
9/19/2013	CON	NA	9:10:24	9:10:28	HSEA	75	80		1		Away	LO	SI		NONE	M	PC	0	1	0-3 ft		Surfaced S of green barge moving S along piles away from rig 1
9/19/2013	CON	NA	9:14:14	9:14:25	HSEA	50	90		1		None	LO	SI		NONE	M	PC	0	1	0-3 ft		
9/19/2013	CON		9:15:13	9:15:20	HSEA	50	250	70	1	0	None	MI	SI		NONE	P	F	0	1	0-3 ft		
9/19/2013	CON		9:17:26	9:17:43	HSEA	30	340	20	1	0	Parallel	RE			NONE	P	F	0	1	0-3 ft		
9/19/2013	CON		9:18:53	9:19:02	HSEA	40	270	50	1	0	Away	SW-N	SI		NONE	P	F	0	1	0-3 ft		
9/19/2013	CON		9:20:06	9:20:21	HSEA	20	270	40	1	0	Toward	SW-E	SI		NONE	P	F	0	1	0-3 ft		Black spots on face
9/19/2013	CON	NA	9:22:24	9:22:41	HSEA	80	0		1		None	LO	MI	SI	NONE	M	PC	0	1	0-3 ft		
9/19/2013	CON		9:24:50	9:25:15	HSEA	40	190	80	1	0	Toward	SW-S			NONE	P	F	0	1	0-3 ft		
9/19/2013	CON		9:27:11	9:27:32	HSEA	115	250	140	2	0	Parallel	SW-N	SI		NONE	P	F	0	1	0-3 ft		second seal appeared seconds after this sighting 50 SW of this seal
9/19/2013	CON	V.1-W8	9:29:46	9:33:06	HSEA	17	270	78	1	0	Parallel	LO	MI	SI	NONE	B	F	0	1	0-3 ft		
9/19/2013	CON	NA	9:31:47	9:34:24	HSEA	85	90		1	1	None	RE	SI		NONE	M	PC	0	1	0-3 ft		Inside piles south of green barge resting, sinking, resurfacing

Date	Event Code	Pile	Start Time	End Time	Species	Dist. To animal (m)	Dir. To animal (deg)	Dist to pile (m)	Best num of animals	Num of juv	Relative motion	Behavior 1	Behavior 2	Behavior 3	Const Type	Visi-bility	Weather	Glare (%)	BSS	Wave ht	Swell Dir	Comments
9/19/2013	CON	NA	9:32:32	9:32:37	HSEA	25	90		1		None	LO	SI		NONE	M	PC	0	1	0-3 ft		
9/19/2013	CON	V.1-W8	9:34:01	9:38:29	HSEA	23	290	75	2	1	Away	LO	RE	DI	NONE	B	F	0	1	0-3 ft		cow calf pair adult is potentially same as last sighting; moved further west outside piles at 9:34
9/19/2013	CON		9:37:16	9:37:33	HSEA	200	190	195	1	0	None	MI			NONE	P	F	0	1	0-3 ft		
9/19/2013	CON	NA	9:41:41	9:42:14	HSEA	50	180		1		None	RE	SI		NONE	M	PC	0	1	0-3 ft		
9/19/2013	CON		9:42:27	9:42:33	HSEA	20	300	30	1	0	Toward	SW-E			NONE	P	F	0	1	0-3 ft		
9/19/2013	CON		9:43:41	9:43:46	HSEA	50	90	40	1	0	None	LO	SI		NONE	P	F	0	1	0-3 ft		
9/19/2013	CON	NA	10:04:31	10:04:33	HSEA	165	150		1		None	LO	SI		NONE	E	PC	0	1	0-3 ft		
9/19/2013	CON	NA	10:17:46	10:18:04	HSEA	75	90		1	1	None	RE	DI		NONE	E	PC	0	1	0-3 ft		
9/19/2013	CON	NA	10:19:39	10:20:10	HSEA	90	160		1		None	LO	SI		NONE	E	PC	0	1	0-3 ft		
9/19/2013	CON	NA	10:21:28	10:23:43	HSEA	70	100		1	1	Away	MI	LO	SI	NONE	E	PC	0	1	0-3 ft		
9/19/2013	CON	V.1-W8	10:23:03	10:24:21	HSEA	10	0	32	1	0	None	LO	DI		NONE	G	PC	0	1	0-3 ft		sighted east of the pile
9/19/2013	CON	NA	10:35:31	10:37:05	HSEA	72	120		1	1	Toward	SW-S	DI	LO	NONE	E	PC	0	1	0-3 ft		
9/19/2013	CON	V.1-W8	10:45:32	10:45:56	HSEA	1	0	15	1	0	None	UN			NONE	G	PC	0	1	0-3 ft		Sighted swimming under water turned sharply after investigating a jellyfish; never surfaced
9/19/2013	CON	NA	10:48:25	10:48:28	HSEA	100	135		1		Toward	SW-E	LO	SI	NONE	E	PC	0	1	0-3 ft		
9/19/2013	CON	V-10	10:50:34	10:50:58	HSEA	50	135	70	1	1	Toward	SW-E	LO	SI	V	E	PC	0	1	0-3 ft		
9/19/2013	CON	NA	11:11:54	11:11:57	HSEA	130	0		1		None	LO	SI		NONE	E	PC	0	1	0-3 ft		
9/19/2013	CON	NA	11:14:13	11:14:16	HSEA	50	90		1	1	None	LO	SI		NONE	E	PC	0	1	0-3 ft		
9/19/2013	CON	T-10	11:26:40	11:26:56	HSEA	95	100	60	1		Toward	SW-S	DI		V	E	PC	0	1	0-3 ft		
9/19/2013	CON	V.1-W8	12:20:49	12:38:14	HSEA	40	270	40	1	0	Toward	LO	SI		NONE	E	PC	0	1	0-3 ft		
9/19/2013	CON	NA	12:22:13	12:23:00	HSEA	75	90		1	0	Toward	SW-S			NONE	E	PC	0	1	0-3 ft		
9/19/2013	CON	NA	13:03:41	13:03:48	HSEA	130	160		1		None	LO	SI		NONE	E	PC	0	1	0-3 ft		
9/19/2013	CON	NA	13:08:32	13:08:39	HSEA	120	150		1		None	LO	SI		NONE	E	PC	0	1	0-3 ft		
9/19/2013	CON	NA	13:13:22	13:14:38	HSEA	70	90		1		None	SW-N	DI		NONE	E	PC	0	1	0-3 ft		
9/19/2013	CON	NA	13:15:38	13:15:52	HSEA	150	90		1		None	SW-N			NONE	E	PC	0	1	0-3 ft		
9/19/2013	CON	NA	14:36:47	14:36:52	HSEA	91	0		1		Away	SW-SE	SI		NONE	E	S	0	1	0-3 ft		
9/19/2013	CON	NA	14:42:48	14:43:05	HSEA	25	280		1	1	None	LO	SI		NONE	E	S	0	1	0-3 ft		
9/19/2013	CON	V.1-W8	14:44:20	14:45:37	HSEA	2	0	35	1	1	None	LO	RE	SI	NONE	E	PC	0	1	0-3 ft		

Date	Event Code	Pile	Start Time	End Time	Species	Dist. To animal (m)	Dir. To animal (deg)	Dist to pile (m)	Best num of animals	Num of juv	Relative motion	Behavior 1	Behavior 2	Behavior 3	Const Type	Visi-bility	Weather	Glare (%)	BSS	Wave ht	Swell Dir	Comments
9/19/2013	CON	NA	14:51:18	14:51:43	HSEA	15	0		1	1	None	LO	SI		NONE	E	S	0	1	0-3 ft		
9/19/2013	CON	NA	14:55:15	14:55:31	HSEA	25	30		2	1	Away	SW-SE	DI		NONE	E	S	0	1	0-3 ft		Very dark juvenile, adult heavily spotted
9/19/2013	CON	NA	15:05:24	15:05:32	HSEA	140	150		1		None	LO	SI		NONE	E	S	0	1	0-3 ft		
9/20/2013	PRE	NA	8:25:24	8:25:35	HSEA	10	270		1	0	None	LO	SI		NONE	E	S	0	1	0-3 ft		
9/20/2013	PRE	NA	8:26:53	8:27:00	HSEA	30	0		1	1	None	SW-E			NONE	E	S	0	1	0-3 ft		
9/20/2013	PRE	NA	8:50:06	8:52:03	HSEA	30	350		1	0	Toward	SW-N	DI		NONE	E	S	0	1	0-3 ft		
9/20/2013	PRE	NA	8:57:59	8:58:07	HSEA	100	260		1	0	Away	SW-NW	DI		NONE	E	S	0	1	0-3 ft		
9/20/2013	CON	NA	9:09:35	9:10:19	HSEA	115	200		1	1	Toward	SW-N			NONE	E	S	0	1	0-3 ft		
9/20/2013	CON	NA	9:10:22	9:10:32	HSEA	90	248		1	0	Parallel	SW-E			NONE	E	S	0	1	0-3 ft		
9/20/2013	CON	NA	9:21:04	9:21:10	HSEA	65	254		1	0	Parallel	SW-S			NONE	E	S	0	1	0-3 ft		
9/20/2013	CON	NA	9:25:29	9:26:17	HSEA	120	200		1	0	Parallel	SW-E			NONE	E	S	0	1	0-3 ft		
9/20/2013	CON	NA	9:28:07	9:32:49	HSEA	180	360		1	0	None	LO			NONE	E	S	0	1	0-3 ft		
9/20/2013	CON	NA	9:34:36	9:34:48	HSEA	70	140		1	0	Toward	LO			NONE	E	S	0	1	0-3 ft		
9/20/2013	CON	NA	9:36:29	9:36:38	HSEA	125	250		1	1	None	LO			NONE	E	S	0	1	0-3 ft		KAD saw this animal jump out of the water onto a rope. It made it onto the rope, stayed for a few seconds and back flipped into water
9/20/2013	CON	NA	9:40:21	9:40:51	HSEA	75	284		1	1	Parallel	SW-S			NONE	E	S	0	1	0-3 ft		
9/20/2013	CON	NA	9:44:08	9:44:09	HSEA	100	90		1	0	Toward	SW-N			NONE	E	S	0	1	0-3 ft		
9/23/2013	CON	NA	9:24:35	9:24:39	HSEA	60	150		1	1	None	LO	SI		NONE	G	OC	0	2	0-3 ft		
9/23/2013	CON	NA	9:48:51	9:52:30	HSEA	20	180		1	1	None	LO	SI	DI	NONE	G	OC	0	2	0-3 ft		Resurfaced in same area, looked, dove quickly
9/23/2013	CON	NA	10:32:42	10:32:54	HSEA	30	100		1		None	LO	SI		NONE	G	OC	0	2	0-3 ft		Near pile post impact
9/23/2013	CON	NA	10:36:09	10:36:22	HSEA	70	90		1		None	LO	SI		NONE	G	OC	0	2	0-3 ft		
9/23/2013	CON	R-10	13:39:43	13:41:20	HSEA	256	90	280	1	0	None	LO	SI		V	E	PC	0	1	0-3 ft		
9/23/2013	CON	R-10	13:47:30	13:49:11	HSEA	276	90	290	1	0	None	LO	SI		NONE	E	PC	0	1	0-3 ft		potentially same individual as previous sighting, in the same area
9/23/2013	CON	M-10	14:22:54	14:23:14	HSEA	10	0	22	1	0	Toward	LO	DI		NONE	E	PC	0	1	0-3 ft		
9/23/2013	CON	M-10	14:45:37	14:45:51	HSEA	267	90	287	1	0	Parallel	SW-N	DI		I	E	PC	0	1	0-3 ft		
9/23/2013	CON	M-10	14:50:31	14:52:26	HSEA	268	90	288	1	0	Parallel	SW-N	DI		V	E	PC	0	1	0-3 ft		
9/23/2013	CON	NA	16:06:18	16:06:22	HSEA	25	270		1		Away	SW-SW	LO	DI	NONE	G	OC	0	2	0-3 ft		Rusty colored body visible when it dove, larger individual
9/23/2013	CON	J-10	16:08:45	16:10:01	HSEA	14	87	35	1	1	Parallel	SW-N	DI		NONE	G	L	0	1	0-3 ft		

Date	Event Code	Pile	Start Time	End Time	Species	Dist. To animal (m)	Dir. To animal (deg)	Dist to pile (m)	Best num of animals	Num of juv	Relative motion	Behavior 1	Behavior 2	Behavior 3	Const Type	Visi-bility	Weather	Glare (%)	BSS	Wave ht	Swell Dir	Comments
9/24/2013	CON	NA	7:49:00	7:49:19	HSEA	120	30		1		None	LO	SI		NONE	E	PC	0	1	0-3 ft		
9/24/2013	CON	NA	7:52:09	7:52:40	HSEA	125	90		1		Parallel	SW-S			NONE	E	PC	0	1	0-3 ft		
9/24/2013	CON	NA	8:00:13	8:00:36	HSEA	130	90		1	1	Parallel	SW-S	SI		NONE	E	PC	0	1	0-3 ft		
9/24/2013	CON	NA	8:06:31	8:06:50	HSEA	70	90		1	1	None	MI	LO	SI	NONE	E	PC	0	1	0-3 ft		possibly a resight
9/24/2013	CON	NA	8:09:04	8:09:26	HSEA	220	180		1		None	LO	SI		NONE	E	PC	0	1	0-3 ft		
9/24/2013	CON	NA	8:30:00	8:30:30	HSEA	130	20		1		Parallel	SW-S	LO	SI	NONE	E	PC	0	1	0-3 ft		
9/24/2013	CON	NA	8:33:20	8:33:49	HSEA	30	90		1		Parallel	SW-S	SI		NONE	E	PC	0	1	0-3 ft		
9/24/2013	CON	NA	8:53:39	8:53:43	HSEA	140	90		1		None	SW-S	SI		NONE	E	PC	0	1	0-3 ft		
9/24/2013	CON	NA	9:11:17	9:11:46	HSEA	250	180		1		None	RE	LO		NONE	E	PC	0	1	0-3 ft		Large rusty colored animal hauled out on platform at north end of marginal
9/24/2013	CON	NA	9:38:01	9:39:58	CASL	120	90		1		Parallel	SW-S	DI		NONE	E	PC	0	1	0-3 ft		
9/24/2013	CON	NA	9:52:59	9:53:22	HSEA	150	90		1	1	None	MI	LO		NONE	E	PC	0	1	0-3 ft		Milling in piles north of rig 2
9/24/2013	CON	NA	10:06:05	10:06:10	HSEA	55	20	30	1	0	Parallel	SW-W			NONE	G	OC	0	1	0-3 ft		
9/24/2013	CON	NA	10:39:04	10:39:06	HSEA	100	20		1		None	SW-S	SI		NONE	E	PC	0	1	0-3 ft		
9/24/2013	CON	NA	10:39:43	10:39:49	HSEA	70	90		1	1	None	LO			NONE	E	PC	0	1	0-3 ft		
9/24/2013	CON	NA	10:40:55	10:41:45	CASL	80	140		1		Parallel	SW-S	DI		NONE	E	PC	0	1	0-3 ft		
9/24/2013	CON	NA	11:06:17	11:06:22	HSEA	180	270		1		None	RE			NONE	E	PC	0	1	0-3 ft		
9/24/2013	CON	NA	12:47:40	12:47:42	HSEA	50	270		1		None	LO			NONE	E	PC	0	1	0-3 ft		Amongst piles pre impact approx 80m
9/24/2013	CON	X-10	13:05:51	13:06:09	HSEA	80	0	190	1		Away	SW-N	DI		I	E	PC	0	1	0-3 ft		moving N on edge of piles
9/24/2013	CON	V-11	13:46:00	13:46:26	HSEA	40	280	145	1	1	Away	LO	SI		I	G	R	0	1	0-3 ft		likely resight of #15
9/24/2013	CON	T-11	14:48:00	14:48:12	HSEA	80	35	180	1		Parallel	SW-S	SI		I	G	L	0	1	0-3 ft		
9/24/2013	CON	NA	15:17:56	15:18:01	HSEA	45	90		1	1	None	LO	SI		NONE	G	L	0	1	0-3 ft		
9/24/2013	CON	NA	15:20:42	15:20:46	HSEA	130	0		1		Away	SW-NE	DI		NONE	G	L	0	1	0-3 ft		
9/24/2013	CON	NA	16:17:40	16:17:53	HSEA	60	300		1		None	RE	LO	SI	NONE	G	R	0	1	0-3 ft		
9/24/2013	CON	R-11	16:21:57	16:22:05	HSEA	75	350	150	1		Away	SW-NE	SI		I	G	R	0	1	0-3 ft		
9/24/2013	CON	R-11	16:24:56	16:24:57	HSEA			28	1		None	LO	SI		I	G	R	0	1	0-3 ft		
9/24/2013	CON	R-11	16:30:15	16:30:24	HSEA	100	120	180	1		Parallel	SW-S	SI		I	G	R	0	1	0-3 ft		pos recorded by Dana also
9/24/2013	CON	R-11	16:33:23	16:35:24	HSEA	169	90	234	1	0	None	LO	MI	SI	I	P	L	0	1	0-3 ft		sighted in eastern most pile area near surveyor stand
9/24/2013	CON	R-10	16:51:12	16:53:11	HSEA	78	90		2	1	None	LO	SL	DI	NONE	P	L	0	1	0-3 ft		
9/24/2013	CON	R-10	16:55:23	16:57:53	HSEA	260	154	275	2	1	Away	SL	DI	SW-S	I	P	PC	0	1	0-3 ft		calf splashing about before it dove; moving towards marginal
9/24/2013	CON	R-10	16:58:25	17:08:27	HSEA	67	87	98	1	0	None	LO	DI	MI	I	P	PC	0	1	0-3 ft		hanging out near surveyor stand

Date	Event Code	Pile	Start Time	End Time	Species	Dist. To animal (m)	Dir. To animal (deg)	Dist to pile (m)	Best num of animals	Num of juv	Relative motion	Behavior 1	Behavior 2	Behavior 3	Const Type	Visi-bility	Weather	Glare (%)	BSS	Wave ht	Swell Dir	Comments
9/24/2013	OTHR		17:14:30	17:21:33	CASL				33			RE			OTHER	G	OC	0	0	0-3 ft		North Delta 3, south Delta 13, WRA fence 17
9/24/2013	POST	NA	17:21:23	17:22:54	HSEA	260	180		3	1	Away	SW-S			NONE	P	PC	0	1	0-3 ft		Heading towards marginal
9/25/2013	CON	NA	8:41:28	8:41:30	HSEA	75	90		1	1	Parallel	SW-S	DI		NONE	E	PC	0	2	0-3 ft		
9/25/2013	CON	NA	9:25:33	9:25:44	HSEA	45	0	40	1		None	LO	SI		NONE	G	OC	0	2	0-3 ft		sank just before impact
9/25/2013	CON	M-10	9:34:28	9:38:30	HSEA	5	0	18	1	1	None	LO	DI		NONE	G	OC	5	2	0-3 ft		
9/25/2013	CON	NA	11:27:02	11:27:13	HSEA	45	35	25	1		None	LO	SI		NONE	E	PC	10	3	0-3 ft		positioning pile in shoe
9/25/2013	CON	NA	13:21:08	13:21:28	HSEA	50	45	80	1	0	None	RE			NONE	E	PC	0	2	0-3 ft		Head tilted back nose in air
9/25/2013	CON	NA	14:13:51	14:14:05	HSEA	45	115	85	1		None	LO	DI		NONE	E	S	10	2	0-3 ft		
9/25/2013	CON	R-9	14:41:16	14:41:29	HSEA	50	90	75	1	0	None	LO	SI		NONE	E	PC	0	2	0-3 ft		
9/25/2013	CON	R-9	14:55:01	14:55:03	HSEA	20	70	120	1	1	None	LO	SI		V	E	PC	10	2	0-3 ft		
9/25/2013	CON	R-9	15:02:01	15:02:16	HSEA	60	90	120	1	1	Toward	LO	SI		NONE	E	S	10	1	0-3 ft		
9/25/2013	CON	M-9	15:33:03	15:33:13	HSEA	55	90	115	1	1	None	LO	SI		V	E	S	10	1	0-3 ft		
9/25/2013	CON	M-9	16:08:30	16:08:34	HSEA	50	100	60	1	1	Toward	SW-S	LO	SI	NONE	E	S	10	1	0-3 ft		
9/25/2013	POST	NA	16:36:43	16:36:48	HSEA	135	100		1	1	Toward	SW-S	LO	SI	NONE	E	S	10	1	0-3 ft		
9/25/2013	POST	NA	16:47:28	16:47:40	HSEA	50	180		1	0	None	LO	SI		NONE	E	S	10	1	0-3 ft		
9/25/2013	POST	NA	16:52:31	16:52:39	HSEA	70	100		1	0	Away	SW-S			NONE	E	S	10	1	0-3 ft		
9/26/2013	PRE	NA	8:58:01	9:00:05	HSEA	30	0		1	0	None	RE	LO	MI	NONE	P	F	0	1	0-3 ft		Resting just west of piles then resurfaced in piles just north of rig 2
9/26/2013	PRE	NA	9:05:28	9:07:18	HSEA	30	180		1	0	Toward	SW-E	LO		NONE	P	F	0	1	0-3 ft		Resurfaced moving south in piles
9/26/2013	PRE	NA	9:07:50	9:09:14	HSEA	45	20		1	0	Toward	SW-E	DI		NONE	P	F	0	1	0-3 ft		
9/26/2013	PRE	NA	9:11:54	9:11:59	HSEA	75	10		2	0	None	LO	PL	DI	NONE	P	F	0	1	0-3 ft		
9/26/2013	PRE	NA	9:14:24	9:14:27	HSEA	60	160		1	0	None	LO			NONE	P	F	0	1	0-3 ft		
9/26/2013	CON	NA	9:14:36	9:14:49	HSEA	30	205	60	1		Toward	SW-N	SI	FL	NONE	P	F	0	0	0-3 ft		placing hammer on pile
9/26/2013	PRE	NA	9:15:42	9:15:45	HSEA	30	90		1	0	Away	SW-S			NONE	P	F	0	1	0-3 ft		
9/26/2013	CON	NA	9:18:00	9:18:09	HSEA	45	295	30	1		None	FL	SI		NONE	P	F	0	0	0-3 ft		placing hammer on pile
9/26/2013	PRE	NA	9:19:04	9:19:08	HSEA	160	270		1	0	Parallel	SW-S			NONE	P	F	0	1	0-3 ft		
9/26/2013	PRE	NA	9:23:09	9:23:15	HSEA	30	60		1		Toward	LO	SI		NONE	P	F	0	1	0-3 ft		In piles near pre impact pile
9/26/2013	CON	NA	9:28:48	9:28:59	HSEA	35	315	35	1		Toward	FL	SW-E	DI	NONE	P	F	0	0	0-3 ft		placing hammer on pile
9/26/2013	CON	NA	9:35:20	9:37:24	HSEA	50	180		1	0	None	LO	SI		NONE	P	F	0	1	0-3 ft		
9/26/2013	CON	NA	9:39:29	9:39:37	HSEA	40	270	45	1		None	LO	SI		NONE	P	F	0	1	0-3 ft		bubble curtain on. Before impact start.

Date	Event Code	Pile	Start Time	End Time	Species	Dist. To animal (m)	Dir. To animal (deg)	Dist to pile (m)	Best num of animals	Num of juv	Relative motion	Behavior 1	Behavior 2	Behavior 3	Const Type	Visi-bility	Weather	Glare (%)	BSS	Wave ht	Swell Dir	Comments
9/26/2013	CON	V.1-W7	9:43:00	9:44:11	HSEA	40	0	90	2	2	None	MI	LO	DI	SSI	M	F	0	1	0-3 ft		1 animal dove quickly upon first SS, resurfaced, both milling, probable resight of #5
9/26/2013	CON	V.1-W7	9:45:16	9:45:59	HSEA	35	280	30	1		None	LO	SI		I	P	F	0	1	0-3 ft		surfaced 90m away, resurfaced closer
9/26/2013	CON	V.1-W7	9:46:13	9:46:44	HSEA	25	90	80	1	1	Toward	SW-NE	LO	SI	I	M	F	0	1	0-3 ft		in piles, pale individual
9/26/2013	CON	V.1-W7	9:48:38	9:48:42	HSEA	95	340	40	2	1	Toward	SW-SE	DI		I	P	F	0	1	0-3 ft		
9/26/2013	CON	V1-W7	9:53:34	9:53:46	HSEA	120	150	200	1	0	Away	SW-S	DI		I	M	F	0	1	0-3 ft		moving south near beach
9/26/2013	CON	NA	10:14:03	10:33:50	HSEA	55	290	35	3	1	Toward	FL	SW-E	DI	NONE	M	F	0	1	0-3 ft		one spotted further south 90m from pile
9/26/2013	CON	X-8	10:22:55	10:22:58	HSEA	60	90	150	1	0	None	LO	SI		NONE	M	PC	0	1	0-3 ft		sighted during pause in vibe, sank prior to restart of vibe
9/26/2013	CON	NA	10:25:32	10:25:35	HSEA	90	90		1	0	Away	SW-N			NONE	M	PC	0	1	0-3 ft		
9/26/2013	CON	NA	10:38:04	10:38:24	HSEA	42	90		1	0	Away	SW-NE	LO	DI	NONE	G	PC	0	1	0-3 ft		
9/26/2013	CON	NA	11:04:42	11:04:49	HSEA	100	0		1	0	None	RE	SI		NONE	G	PC	0	1	0-3 ft		
9/26/2013	CON	NA	12:03:11	12:03:20	HSEA	150	15		1	0	None	LO	MI	SI	NONE	G	PC	0	1	0-3 ft		
9/26/2013	CON	T-8	13:08:06	13:08:11	HSEA	80	180	40	1	0	None	LO	SI		NONE	G	PC	0	1	0-3 ft		just pre-vibe
9/26/2013	CON	T-8	13:14:39	13:14:40	HSEA	20	180	100	1	0	Parallel	LO	SI		V	G	PC	10	1	0-3 ft		
9/26/2013	CON	T-8	13:23:22	13:23:28	HSEA	50	195	140	1	0	Toward	LO	SI		NONE	G	PC	10	1	0-3 ft		
9/26/2013	CON	R-8	13:32:40	13:32:59	HSEA	20	150	100	1	0	Parallel	SW-E	RE		NONE	G	PC	10	1	0-3 ft		Very light animal. Eyes appeared to be closed, a bit of reddish grey on head
9/26/2013	CON	NA	14:33:46	14:34:07	HSEA	45	5	55	1		Toward	SW-S	LO	SI	NONE	E	PC	0	1	0-3 ft		sank 10s before vibe on
9/26/2013	CON	M-8	14:38:32	14:39:02	HSEA	135	20	145	1		Away	SW-NE	LO	DI	V	E	PC	0	1	0-3 ft		surfaced after vibe off, dove on vibe restart
9/26/2013	CON	R-8	15:22:44	15:25:54	HSEA	170	0	290	1	0	None	LO	SI		NONE	G	PC	10	1	0-3 ft		
9/26/2013	CON	R-8	15:36:16	15:36:30	HSEA	30	330	130	1	1	Toward	SW-SE			NONE	G	PC	10	1	0-3 ft		
9/26/2013	CON	NA	15:37:01	15:37:18	HSEA	85	5	90	1		None	SW-E	SW-W	SI	NONE	E	S	0	1	0-3 ft		
9/26/2013	CON	J-8	15:40:04	15:40:10	HSEA	190	0	320	1	0	None	SI			V	G	PC	10	1	0-3 ft		
9/26/2013	CON	J-8	15:41:10	15:47:15	HSEA	150	15	160	1	0	Parallel	SW-E	SW-S	SW-W	V	G	PC	10	1	0-3 ft		Seemed to be slowly approaching piles and pile being vibed. Animal surfaced near barge and [NWG] recorded animal
9/26/2013	CON	NA	15:45:20	15:45:31	HSEA	130	0	125	1		Parallel	SW-W	SI		NONE	E	S	0	1	0-3 ft		
9/26/2013	CON	NA	15:50:26	15:50:35	HSEA	55	316	35	1		Toward	SW-S	SI		NONE	E	S	0	1	0-3 ft		in vetween vibe, before vibe on.
9/26/2013	CON	NA	15:53:00	15:53:07	HSEA	10	45	65	1		None	LO	DI		NONE	E	S	0	1	0-3 ft		in vetween vibe, before vibe on.
9/26/2013	POST	NA	16:43:39	16:43:58	HSEA	35	0	45	1		Toward	MI	LO	DI	NONE	E	S	0	1	0-3 ft		
9/26/2013	OTHR	NA	16:50:44	16:50:57	CASL	60			37		None	HO	RE		OTHER	G	PC	10	1	0-3 ft		9 north package, 14, south package, 14 wra fence. About half juveniles

Date	Event Code	Pile	Start Time	End Time	Species	Dist. To animal (m)	Dir. To animal (deg)	Dist to pile (m)	Best num of animals	Num of juv	Relative motion	Behavior 1	Behavior 2	Behavior 3	Const Type	Visi-bility	Weather	Glare (%)	BSS	Wave ht	Swell Dir	Comments
9/27/2013	CON	NA	14:22:27	14:22:45	HSEA	40	70		1	1	None	LO	SI		NONE	E	OC	0	3	0-3 ft		
9/27/2013	CON	NA	14:25:45	14:26:35	HSEA	30	90		1	1	None	FO	SI		NONE	E	OC	0	3	0-3 ft		Fish in mouth, at surface on back, fish stolen by gull
9/27/2013	CON	V.1-W5	14:40:18	14:40:19	HSEA	30	40	60	1	0	None	MI	DI		NONE	G	OC	10	2	0-3 ft		
9/27/2013	CON	V.1-W5	15:25:17	15:25:24	HSEA	35	10	125	1		None	LO	DI		V	E	OC	0	2	0-3 ft		
9/27/2013	POST	NA	15:52:56	15:53:02	HSEA	15	180		1		Toward	SW-N	LO	DI	NONE	E	OC	0	2	0-3 ft		
9/28/2013	CON	NA	9:52:16	9:52:23	HSEA	40	30		1		None	RE	SI		NONE	G	L	0	2	0-3 ft		
9/28/2013	CON	NA	10:18:39	10:18:54	HSEA	30	290		1		None	RE	DI		NONE	G	R	0	2	0-3 ft		
9/28/2013	CON	V.1-W5	10:25:28	10:25:47	HSEA	45	276	45	1	0	None	LO	DI		NONE	M	L	10	2	0-3 ft		
9/28/2013	CON	NA	10:34:45	10:34:47	HSEA	75	100		1		None	LO	SI		NONE	G	R	0	2	0-3 ft		
9/28/2013	CON	NA	10:37:34	10:38:05	HSEA	72	90		1		None	MI	LO	SI	NONE	G	R	0	3	0-3 ft		
9/28/2013	CON	NA	10:38:07	10:38:48	HSEA	55	90		1		None	SW-S	DI		NONE	G	R	0	3	0-3 ft		
9/30/2013	CON		9:28:10	9:28:18	HSEA	80	60		1		None	LO	SI		NONE	M	PC	10	1	0-3 ft		
9/30/2013	CON		9:41:21	9:41:29	HSEA	90	270		1		None	LO	SI		NONE	M	PC	10	1	0-3 ft		
9/30/2013	CON		9:51:01	9:51:19	HSEA	40	270		1		Parallel	SW-S	DI		NONE	M	PC	0	1	0-3 ft		
9/30/2013	CON		10:22:22	10:22:45	HSEA	80	60		1		None	LO	SI		NONE	M	PC	5	1	0-3 ft		
9/30/2013	CON	NA	10:37:25	10:37:35	HSEA	10	20	40	1		None	MI			NONE	G	OC	0	1	0-3 ft		
9/30/2013	CON	NA	11:04:43	11:05:51	HSEA	260	90		1	0	Away	SW-S	DI		NONE	M	L	0	2	0-3 ft		
9/30/2013	CON		11:22:22	11:22:44	HSEA	20	30		1		None	LO	SI		NONE	M	OC	0	1	0-3 ft		
9/30/2013	CON	V-7	11:24:23	11:25:37	HSEA	30	78	60	1	0	Away	DI			NONE	M	L	0	1	0-3 ft		
9/30/2013	CON	NA	11:25:01	11:25:31	HSEA	5	0	20	1		None	MI	DI		NONE	E	L	0	1	0-3 ft		
9/30/2013	CON	V.1-W5	12:42:38	12:42:57	HSEA	70	330	40	1		Toward	SW-E			I	E	S	20	2	0-3 ft		
9/30/2013	CON	NA	13:01:18	13:01:55	HSEA	65	330	35	1		None	MI			NONE	E	S	20	2	0-3 ft		
9/30/2013	CON		13:21:11	13:21:38	HSEA	90	290	190	1		None	LO	SI		NONE	M	OC	0	1	0-3 ft		
9/30/2013	CON		13:35:03	13:35:10	HSEA	100	50	80	1		None	LO	SI		NONE	M	PC	0	1	0-3 ft		
9/30/2013	CON		14:11:55	14:12:06	HSEA	100	300	150	1		Away	SW-SW			NONE	M	PC	0	1	0-3 ft		
9/30/2013	CON		14:18:23	14:18:29	HSEA	180	340	220	1		Away	SW-NW	DI		NONE	M	PC	0	1	0-3 ft		
9/30/2013	CON		14:28:55	14:29:06	HSEA	250	120	150	1		Away	SW-S	DI		NONE	M	PC	0	1	0-3 ft		
9/30/2013	CON		14:35:08	14:35:20	CASL	200	160	220	1		Away	SW-SW	DI		NONE	M	PC	10	1	0-3 ft		
9/30/2013	CON	R-07	14:36:49	14:40:16	HSEA	20	24	50	1	0	None	LO	SI		NONE	G	L	20	2	0-3 ft		putting hammer on pile

Date	Event Code	Pile	Start Time	End Time	Species	Dist. To animal (m)	Dir. To animal (deg)	Dist to pile (m)	Best num of animals	Num of juv	Relative motion	Behavior 1	Behavior 2	Behavior 3	Const Type	Visi-bility	Weather	Glare (%)	BSS	Wave ht	Swell Dir	Comments
9/30/2013	CON		14:42:28	14:43:39	HSEA	150	130	100	1		Away	SW-S	DI		NONE	M	OC	0	1	0-3 ft		
9/30/2013	CON		14:57:03	14:57:44	HSEA	250	230	350	1		Away	TR-S			NONE	M	PC	10	1	0-3 ft		
9/30/2013	CON	M-07	15:16:55	15:19:41	HSEA	32	0	57	1	0	Away	LO	DI		NONE	G	PC	20	2	0-3 ft		
9/30/2013	CON		15:39:03	15:39:10	HSEA	80	290	90	1		Away	SW-SW	DI		NONE	M	PC	10	2	0-3 ft		
9/30/2013	CON		16:06:59	16:07:22	CASL	200	160	220	1		Away	SW-S	DI	HO	NONE	M	PC	10	1	0-3 ft		
10/1/2013	PRE	NA	7:41:00	7:41:04	HSEA	50	270		1		None	LO	SI		NONE	M	R	0	1	0-3 ft		
10/1/2013	PRE	NA	7:47:35	7:47:46	HSEA	60	45		1		None	LO	SI		NONE	M	R	0	1	0-3 ft		
10/1/2013	PRE	NA	7:51:05	7:51:16	HSEA	30	270		1		Away	SW-N	DI		NONE	M	R	0	1	0-3 ft		Animal is swimming among piles
10/1/2013	PRE	NA	7:57:12	7:57:38	HSEA	50	45		1		None	RE	DI		NONE	M	R	0	1	0-3 ft		
10/1/2013	CON	NA	7:57:22	8:02:59	HSEA	15	0		1	0	None	LO	MI	SI	NONE	M	L	0	1	0-3 ft		
10/1/2013	CON	NA	8:20:01	8:20:13	HSEA	60	80		1		None	LO	SI		NONE	M	R	0	1	0-3 ft		
10/1/2013	CON	NA	8:44:14	8:44:15	HSEA	32	0		1	0	None	LO	SI		NONE	M	PC	0	1	0-3 ft		
10/1/2013	CON	NA	8:45:22	8:46:23	HSEA	40	348		1	0	None	LO	SW-E	DI	NONE	M	PC	0	1	0-3 ft		Sighted from northwest corner of the rig.
10/1/2013	CON	NA	8:46:47	8:47:34	HSEA	150	180		1		Parallel	SW-E	DI		NONE	M	PC	0	1	0-3 ft		
10/1/2013	CON	NA	8:57:27	8:58:15	HSEA	120	340		1		None	LO	SI		NONE	P	PC	0	1	0-3 ft		
10/1/2013	CON	NA	9:08:07	9:08:17	HSEA	120	30		1		None	RE	SI		NONE	P	PC	0	1	0-3 ft		
10/1/2013	CON	NA	9:14:40	9:15:04	HSEA	80	300		1		Parallel	SW-N	DI		NONE	M	PC	5	1	0-3 ft		
10/1/2013	CON	NA	9:25:09	9:25:11	HSEA	50	270		1		None	LO	DI		NONE	M	PC	5	1	0-3 ft		
10/1/2013	CON	NA	9:34:21	9:34:28	HSEA	50	90		1		None	LO			NONE	M	PC	15	1	0-3 ft		
10/1/2013	CON	NA	9:55:34	9:55:40	HSEA	40	290		1		Away	LO	DI		NONE	M	PC	15	1	0-3 ft		
10/1/2013	CON	X-9	10:12:40	10:12:49	HSEA	20	90	80	1		Away	SW-E	DI		I	M	PC	15	1	0-3 ft		
10/1/2013	CON	X-9	10:14:07	10:20:05	HSEA	80	87	70	1	0	None	LO	RE	SI	I	G	PC	20	1	0-3 ft		
10/1/2013	CON	NA	10:40:53	10:41:11	HSEA	40	160		1		Away	SW-SW			NONE	M	PC		1	0-3 ft		
10/1/2013	CON	X-8	10:53:20	10:54:12	HSEA	60	30	200	1		None	LO	SI		I	M	PC	0	1	0-3 ft		
10/1/2013	CON	X-7	11:01:43	11:04:08	HSEA	200	160		1		Toward	SW-NW	DI		NONE	M	PC	0	1	0-3 ft		
10/1/2013	CON	X-7	11:08:44	11:08:46	HSEA	56	14	32	1		None	LO	SI		I	G	PC	10	1	0-3 ft		
10/1/2013	CON	X-7	11:15:30	11:15:41	HSEA	200	160	260	1		Away	SW-S			I	M	PC	10	1	0-3 ft		
10/1/2013	CON	V-7	11:31:10	11:32:31	HSEA	264	112	280	1		Away	SW-S	DI		NONE	G	PC	10	1	0-3 ft		along shoreline near whit snag
10/1/2013	CON		12:46:54	12:47:05	HSEA	20	90		1	1	Away	SW-SE	DI		NONE	M	PC	10	1	0-3 ft		
10/1/2013	CON	V-8	13:03:26	13:05:29	HSEA	15	90	30	1		None	LO	SI		NONE	G	PC	10	1	0-3 ft		
10/1/2013	CON	V-08	13:12:25	13:13:07	HSEA	5	180	150	1	1	Toward	LO	DI	SW-S	I	M	S	15	1	0-3 ft		

Date	Event Code	Pile	Start Time	End Time	Species	Dist. To animal (m)	Dir. To animal (deg)	Dist to pile (m)	Best num of animals	Num of juv	Relative motion	Behavior 1	Behavior 2	Behavior 3	Const Type	Visi-bility	Weather	Glare (%)	BSS	Wave ht	Swell Dir	Comments
10/1/2013	CON	V-8	13:14:14	13:14:41	HSEA	48	0	30	1		None	LO	SW-E		I	G	PC	10	1	0-3 ft		just before impact 5 additional blows or so
10/1/2013	CON	V-9	13:33:22	13:52:07	HSEA	157	125	180	1	0	None	LO	RE	SI	I	G	PC	10	1	0-3 ft		closer to shoreline near white snag; look, rest, sink; floating north with current; seal remained in area after impacting
10/1/2013	CON	T-9	14:29:18	14:37:31	HSEA	6	90	26	1	1	Toward	LO	SI		I	G	PC	10	1	0-3 ft		dead chinook was in area; sighted in between piles as well hung out around eastern cables
10/1/2013	CON	T-07	15:22:36	15:23:02	HSEA	60	120	140	1		Away	SW-NW			I	M	OC	0	1	0-3 ft		
10/1/2013	CON	T-7	15:25:04	15:25:20	HSEA	40	345	32	1	1	None	LO	DI		I	E	PC	0	1	0-3 ft		
10/1/2013	CON	R-8	15:55:31	15:56:59	HSEA	58	90	78	1	1	None	LO	SI		NONE	G	PC	10	1	0-3 ft		10 m from surveyor stand
10/1/2013	CON	NA	15:57:05	15:57:16	HSEA	80	270	80	1		None	LO	DI		NONE	M	PC	15	1	0-3 ft		
10/1/2013	CON	R-9	16:35:14	16:37:35	HSEA	2	94	34	1	1	None	LO	HO	DI	I	G	PC	0	2	0-3 ft		seal swam and surfaced from under the rig southeast side; looked around and hauled out on the southeast anchor cable and dove when wind picked up
10/1/2013	POST	NA	16:57:19	16:57:29	HSEA	40	90		1		None	LO	SI		NONE	M	PC	25	1	0-3 ft		
10/1/2013	POST	NA	17:02:34	17:02:47	HSEA	70	0		1	0	Away	SW-N	DI		NONE	G	PC	0	2	0-3 ft		
10/1/2013	POST	NA	17:09:00	17:09:06	HSEA	40	90		1	1	None	LO	DI		NONE	M	PC	25	1	0-3 ft		
10/2/2013	PRE	NA	8:21:14	8:26:08	HSEA	30	180		2		None	LO	DI		NONE	M	OC	0	1	0-3 ft		
10/2/2013	CON	NA	8:53:28	8:53:35	HSEA	60	110		1		Away	SW-S			NONE	M	OC	0	1	0-3 ft		
10/2/2013	CON	NA	10:10:40	10:12:40	HSEA	50	150		1		Away	SW-S	DI	SW-NW	NONE	M	R	0	1	0-3 ft		
10/2/2013	CON	NA	10:42:08	10:42:53	HSEA	100	120		1		None	RE	DI		NONE	M	R	0	1	0-3 ft		
10/2/2013	CON	NA	11:10:55	11:12:24	HSEA	100	180		1		Away	SW-SE	DI		NONE	M	OC	0	1	0-3 ft		
10/2/2013	CON	J-9	11:30:10	11:33:16	HSEA	256	156	289	1		Away	TR-S	DI		I	G	L	0	1	0-3 ft		
10/2/2013	CON	J-9	11:31:03	11:31:24	HSEA	20	180	70	1		Parallel	SW-S	DI		I	M	OC	0	1	0-3 ft		
10/2/2013	CON	J-9	11:36:08	11:36:19	HSEA	150	160	350	1		Away	DI			I	M	OC	0	1	0-3 ft		animal was swimming beneath water; we could not ascertain swim direction
10/2/2013	CON	NA	12:09:41	12:10:02	HSEA	30	180		1		None	LO	DI		NONE	M	OC	0	1	0-3 ft		
10/2/2013	CON	NA	12:27:22	12:27:33	HSEA	300	190		3		None	RE			NONE	M	OC	0	1	0-3 ft		
10/2/2013	CON	NA	12:41:31	12:42:27	HSEA	300	190		3		None	LO	SI		NONE	M	OC	0	1	0-3 ft		
10/2/2013	CON	NA	12:43:23	12:44:03	HSEA	30	200		1		None	LO	DI		NONE	M	OC	0	1	0-3 ft		
10/2/2013	CON	M-8	12:53:53	12:54:34	HSEA	30	0	25	1	1	Away	LO	SI		SSI	G	OC	0	1	0-3 ft		
10/2/2013	CON	M-8	12:58:52	13:04:09	HSEA	34	0	28	1	0	Away	LO	DI		I	G	OC	0	1	0-3 ft		
10/2/2013	CON	M-8	12:59:04	12:59:15	HSEA	60	330	90	1		Parallel	SW-N			I	M	OC	0	1	0-3 ft		

Date	Event Code	Pile	Start Time	End Time	Species	Dist. To animal (m)	Dir. To animal (deg)	Dist to pile (m)	Best num of animals	Num of juv	Relative motion	Behavior 1	Behavior 2	Behavior 3	Const Type	Visi-bility	Weather	Glare (%)	BSS	Wave ht	Swell Dir	Comments
10/2/2013	CON	M-8	13:07:23	13:07:34	HSEA	100	100	200	1		Toward	SW-W			I	M	OC	0	1	0-3 ft		
10/2/2013	CON	NA	13:23:34	13:23:40	HSEA	100	90		1		Parallel	SW-N	DI		NONE	M	OC	0	1	0-3 ft		
10/2/2013	CON	NA	13:33:38	13:34:00	HSEA	130	80		1		Away	SW-SW	DI		NONE	M	OC	0	1	0-3 ft		
10/2/2013	CON	NA	13:51:14	13:53:41	HSEA	90	20		1	1	None	RE	SI		NONE	M	OC	0	1	0-3 ft		
10/2/2013	CON	NA	14:01:14	14:01:26	HSEA	40	340		1		Toward	SW-W	DI		NONE	M	OC	0	1	0-3 ft		
10/2/2013	CON	NA	14:08:29	14:09:30	CASL	200	180		1		Away	SW-S	TR-S		NONE	M	OC	0	1	0-3 ft		
10/2/2013	CON	J-7	14:17:26	14:20:32	HSEA	47	0	30	1	0	Parallel	SW-W	DI		I	G	OC	0	1	0-3 ft		
10/2/2013	CON	J-7	14:20:36	14:31:17	HSEA	40	270	150	1	1	None	RE			I	M	OC	0	1	0-3 ft		
10/2/2013	CON	J-7	14:25:09	14:28:10	HSEA	200	190	300	1		None	RE			I	M	OC	0	1	0-3 ft		
10/2/2013	CON	J-7	14:32:04	14:32:10	HSEA	30	270	35	1		None	RE	SI		NONE	M	PC	0	1	0-3 ft		
10/2/2013	CON	NA	14:53:09	14:53:17	HSEA	20	270		1		Toward	SW-N	DI		NONE	M	OC	0	1	0-3 ft		
10/2/2013	CON	M-7	15:02:24	15:02:35	HSEA	100	90	220	1		Away	SW-S	DI		I	M	OC	0	1	0-3 ft		
10/2/2013	CON	M-7	15:17:00	15:17:02	HSEA	10	290	50	1	1	None	LO	SI		I	M	OC	0	1	0-3 ft		
10/2/2013	OTHR	NA	15:40:57	15:43:10	CASL				37		None	HO			OTHER	M	OC	0	1	0-3 ft		Mammal count, 13 on north package, 11 on south package and 13 on WRA fence
10/3/2013	PRE	NA	8:01:38	8:06:04	HSEA	1	0		1	1	None	LO	VO	SI	NONE	G	PC	10	1	0-3 ft		Sighting from boat located near sw corner ehw-1 (150 meters)
10/3/2013	CON	NA	8:45:46	8:45:55	HSEA	240	180		1	0	None	SW-S	SI		NONE	G	PC	10	1	0-3 ft		
10/3/2013	CON	NA	8:49:12	8:49:16	HSEA	45	270		1	1	None	SW-W	SI		NONE	G	PC	10	1	0-3 ft		
10/3/2013	CON	X-6	9:23:14	9:24:21	HSEA	35	0	28	1	1	None	LO	SI		NONE	M	PC	0	1	0-3 ft		
10/3/2013	CON	X-06	9:35:15	9:35:24	HSEA	251	120	200	1	1	Away	SW-S	SI		NONE	G	PC	15	1	0-3 ft		
10/3/2013	CON	X-6	9:36:21	9:44:00	HSEA	62	263	65	1	0	Away	LO	SI		NONE	M	OC	0	1	0-3 ft		
10/3/2013	CON	X-6	9:50:34	9:50:39	HSEA	72	0	100	1	0	Toward	SW-SE	DI		V	G	PC	15	1	0-3 ft		
10/3/2013	CON	NA	9:53:54	9:53:59	HSEA	267	90		1	1	None	SW-N	DI		NONE	G	PC	50	1	0-3 ft		
10/3/2013	CON	NA	10:01:06	10:01:13	HSEA	75	45	100	1	1	Parallel	SW-SE	DI		NONE	G	PC	15	1	0-3 ft		
10/3/2013	CON	NA	10:30:57	10:31:09	HSEA	257	120	190	1	0	None	SW-S	DI		NONE	G	PC	50	1	0-3 ft		
10/3/2013	CON	V-6	11:09:57	11:10:39	HSEA	12	0	22	1	1	Toward	LO	SI		V	G	PC	0	1	0-3 ft		
10/3/2013	CON	V-6	11:26:26	11:26:32	HSEA	156	98	215	1	0	Away	SW-S	DI		NONE	G	PC	0	1	0-3 ft		
10/3/2013	CON	T-6	12:52:01	13:00:45	HSEA	23	0	20	2	1	Toward	LO	SW-SW	DI	NONE	G	PC	0	1	0-3 ft		Cow and calf pair surfacing at different times; sighted before during and after vibe
10/3/2013	CON	T-6	12:55:20	12:56:43	CASL	256	120	185	1	0	Parallel	TR-S	PO	DI	V	G	PC	0	1	0-3 ft		
10/3/2013	CON	NA	13:07:41	13:07:48	HSEA	150	90		1	0	None	SW-N	DI		NONE	G	PC	0	1	0-3 ft		
10/3/2013	CON	NA	13:13:24	13:14:01	CASL	120	90		1	0	Away	TR-S	DI		NONE	G	PC	0	1	0-3 ft		

Date	Event Code	Pile	Start Time	End Time	Species	Dist. To animal (m)	Dir. To animal (deg)	Dist to pile (m)	Best num of animals	Num of juv	Relative motion	Behavior 1	Behavior 2	Behavior 3	Const Type	Visi-bility	Weather	Glare (%)	BSS	Wave ht	Swell Dir	Comments
10/3/2013	CON	NA	13:17:08	13:17:27	HSEA	288	90		2	0	Parallel	SW-N	DI		NONE	G	PC	0	1	0-3 ft		
10/3/2013	CON	R-06	13:48:15	13:48:35	HSEA	76	45	125	1	1	Parallel	SW-SW	DI		NONE	G	PC	10	1	0-3 ft		stabbing pile R-06
10/3/2013	CON	R-06	13:50:09	13:50:59	CASL	190	90	85	1	0	Parallel	TR-S	DI	PO	NONE	G	PC	10	1	0-3 ft		stabbing pile R-06
10/3/2013	CON	T-6	14:49:12	15:00:24	HSEA	50	0	40	1	1	None	HO			NONE	G	PC	0	1	0-3 ft		hauled out on yellow bouble curtain cables east of 999 rig; sighted climbing up before vibe pile M-06; dove into water at 15:00; possible neonate
10/3/2013	CON	T-6	15:12:46	15:14:48	CASL	76	270	85	3	0	Away	SP	UN		NONE	G	PC	0	1	0-3 ft		potentially 1 male and 2 females social behavior
10/3/2013	CON	J-6	15:21:51	15:57:03	HSEA	50	0	40	1	1	None	HO			V	G	PC	0	1	0-3 ft		hauled out on yellow bouble curtain cables closer to rig 999 within a meter; possibly same individual as sighting 6
10/4/2013	PRE	na	10:33:25	10:33:49	HSEA	150	230		1	0	Away	SW-W	DI		NONE	B	F	0	1	0-3 ft		
10/4/2013	CON	na	10:44:08	10:44:13	HSEA	75	120		1	1	Away	SW-S			NONE	B	F	0	1	0-3 ft		
10/4/2013	CON	na	10:51:06	10:51:43	HSEA	100	230		1	1	None	RE			NONE	B	F	0	1	0-3 ft		
10/4/2013	CON	na	11:17:47	11:17:59	HSEA	55	220		1	0	Away	RE	SI		NONE	B	F	0	1	0-3 ft		
10/4/2013	CON	L-44	11:46:00	11:46:11	HSEA	303	0	350	1	0	Away	SW-W			NONE	G	F	0	1	0-3 ft		
10/4/2013	CON	L-44	11:48:02	11:48:05	HSEA	35	180	120	1	1	None	LO	SI		NONE	G	F	0	1	0-3 ft		
10/4/2013	CON	L-44	12:00:54	12:01:24	HSEA	380	180	480	1	0	None	SW-E			NONE	G	F	0	1	0-3 ft		Just after impact
10/4/2013	CON	L-44	12:01:33	12:01:36	HSEA	25	270	130	1	1	None	LO	SI		NONE	G	F	0	1	0-3 ft		Just after impact
10/4/2013	CON	L-44	12:34:37	12:34:42	HSEA	250	180	500	1	0	None	SW-W	DI		NONE	G	F	0	1	0-3 ft		
10/4/2013	CON	L-44	12:41:31	15:45:24	HSEA	400	190	500	4	1	None	HO			NONE	G	F	0	1	0-3 ft		3 animals originally hauled out, then 2, then 4. impacted J-40, J-38 and J-37 while 4 hauled out, 2 hauled out during impact of J-36. did not observe when animals entered water. May have occurred when doing transect and animals out of sight
10/4/2013	CON	L-44	14:00:08	14:01:27	HSEA	100	60	40	1	1	Toward	RE	SW-N		NONE	G	F	0	1	0-3 ft		
10/4/2013	CON	NA	14:57:20	14:58:02	CASL	350	250	450	1	0	Away	SW-S			NONE	G	F	0	1	0-3 ft		
10/4/2013	CON	NA	15:13:53	15:15:07	HSEA	20	180	50	1	1	Toward	SW-S	DI	LO	NONE	G	F	0	1	0-3 ft		just after striking J-40 and prior to vibing TT-01
10/4/2013	CON	TT-1	15:21:52	15:27:33	HSEA	56	45	25	1	1	None	LO	RE	DI	V	G	PC	5	1	0-3 ft		temporary pile vibed out without warning; seal sighted 2 m north of vibe rig

Date	Event Code	Pile	Start Time	End Time	Species	Dist. To animal (m)	Dir. To animal (deg)	Dist to pile (m)	Best num of animals	Num of juv	Relative motion	Behavior 1	Behavior 2	Behavior 3	Const Type	Visi-bility	Weather	Glare (%)	BSS	Wave ht	Swell Dir	Comments
10/4/2013	CON	J-37	16:03:38	16:03:43	HSEA	150	180	120	1	0	None	RE	SI		I	G	PC	10	1	0-3 ft		at surface but couldn't determine if resting or looking before dove
10/4/2013	CON	TT-1	16:34:34	16:39:00	HSEA	8	78	30	1	1	Away	SW-N	DI		V	G	PC	5	2	0-3 ft		30 m from TT-01 and 34 m from M-36
10/4/2013	CON	TT-1	16:36:09	16:38:39	HSEA	75	80	120	1	1	Toward	LO			V	G	PC	10	1	0-3 ft		
10/4/2013	CON	M-36	16:37:40	16:41:12	HSEA	5	0	42	1	1	Away	LO	DI		I	G	PC	5	2	0-3 ft		same as last but sighted during impact as well as vibe activities; tablet 3's no. 15 and 16 sighting potentially
10/4/2013	CON	M-36	16:49:52	16:49:54	HSEA	160	90	50	1	1	Toward	LO	SI		I	G	PC	10	1	0-3 ft		Likely same animal as in sighting 15 and sighting number 2 on tablet 3 [DS].
10/4/2013	CON	N-36	17:00:34	17:01:22	HSEA	5	0	32	1	1	None	LO	DI		NONE	G	PC	5	2	0-3 ft		possibly the same individual as sighting 2
10/4/2013	POST	n-36	17:06:17	17:14:32	HSEA	80	180	75	2	2	Toward	SW-NE	LO		NONE	G	PC	10	1	0-3 ft		after impact, two juveniles swimming around and sighted in last two sightings. Then one surfaced north of piles at 5:14.
10/7/2013	CON	X-5	10:26:22	10:26:26	HSEA	97	345	95	1	0	Parallel	SW-W			NONE	E	PC	0	1	0-3 ft		
10/7/2013	CON	V-5	10:54:45	10:59:07	CASL	100	45	95	2	0	Toward	TR-S	LO		NONE	G	PC	10	2	0-3 ft		One CASL first seen approx. 200 m North of Rig #1, swam under rig and appeared 50 m south with a second CASL. Both CASL continued South toward Delta.
10/7/2013	CON	T-5	11:44:41	11:46:45	HSEA	91	95	80	1	1	None	RE	SI		NONE	E	PC	10	1	0-3 ft		
10/7/2013	CON	T-5	11:49:54	11:49:56	HSEA	120	200	175	1	0	None	LO	RE	SI	NONE	E	PC	10	1	0-3 ft		
10/7/2013	CON	T-5	12:05:43	12:05:52	HSEA	250	180	200	1	0	Away	SW-S			V	E	PC	10	1	0-3 ft		
10/7/2013	CON	J-35	12:32:37	12:32:41	HSEA	20	0	1	1	1	None	LO	DI		NONE	E	PC	0	1	0-3 ft		
10/7/2013	CON	J-35	12:35:38	12:35:45	HSEA	4	80	20	1	1	Parallel	MI	DI		NONE	E	PC	0	1	0-3 ft		
10/7/2013	CON	L-35	13:18:51	13:19:11	HSEA	65	150	100	1	1	Away	SW-SE			I	E	PC	10	1	0-3 ft		
10/7/2013	CON	L-35	13:36:41	13:38:58	HSEA	40	150	50	1	1	Parallel	SW-N	DI		I	E	PC	10	1	0-3 ft		
10/7/2013	CON	L-34	13:41:41	13:41:44	HSEA	30	45	80	1	1	None	PL			I	E	PC	10	2	0-3 ft		
10/7/2013	CON	L-34	13:41:59	13:42:01	HSEA	20	25	85	1	1	None	LO	DI		I	E	PC	10	2	0-3 ft		Juvenile was seen right after sighting 6.1, not confident this juvenile is a re-sighting. Dove backwards
10/7/2013	CON	L-34	13:53:22	13:53:38	HSEA	20	45	120	1	1	Away	PL	LO		NONE	E	PC	10	2	0-3 ft		Sprinting through water while rolling and splashing- no food seen so behavior was assumed to be playful
10/7/2013	CON	J-34	13:58:35	13:58:43	HSEA	40	45	60	1	1	Toward	SW-SE	DI		I	E	PC	10	2	0-3 ft		
10/7/2013	CON	L-34	14:03:09	14:03:10	HSEA	80	160	90	1	1	None	LO	SI		NONE	E	PC	10	2	0-3 ft		
10/7/2013	CON	L-33	14:26:10	14:26:23	HSEA	100	50	85	1	0	None	LO			I	E	PC	10	2	0-3 ft		

Date	Event Code	Pile	Start Time	End Time	Species	Dist. To animal (m)	Dir. To animal (deg)	Dist to pile (m)	Best num of animals	Num of juv	Relative motion	Behavior 1	Behavior 2	Behavior 3	Const Type	Visi-bility	Weather	Glare (%)	BSS	Wave ht	Swell Dir	Comments
10/7/2013	CON	L-34	14:29:11	14:31:25	HSEA	100	80	60	1	0	None	RE	LO		NONE	E	PC	10	2	0-3 ft		Looking South towards activity
10/7/2013	CON	J-32	14:42:36	14:43:41	CASL	30	45	200	1	0	Away	TR-N			I	E	PC	10	2	0-3 ft		Traveling very fast North with frequent splashes
10/7/2013	CON	J-32	14:46:17	14:46:21	HSEA	50	190	150	1	1	Toward	SW-N	SI		I	E	PC	10	2	0-3 ft		
10/7/2013	CON	L-32	14:51:34	14:51:40	HSEA	20	100	15	2	0	Toward	MI	DI		NONE	E	PC	0	1	0-3 ft		
10/7/2013	CON	L-32	14:52:34	14:52:46	HSEA	250	90	80	1	0	None	LO	SI		NONE	E	PC	10	2	0-3 ft		
10/7/2013	CON	L-32	14:56:14	14:56:22	HSEA	90	160	200	1	0	Toward	SW-N	SI		NONE	E	PC	10	2	0-3 ft		
10/7/2013	CON	L-32	14:58:54	14:59:12	HSEA	100	275	300	1	0	Away	SW-NW			I	E	PC	10	2	0-3 ft		
10/7/2013	CON	L-31	15:26:48	15:26:54	HSEA	90	90	65	1	0	Away	SW-N			NONE	E	PC	10	2	0-3 ft		
10/7/2013	CON	L-31	15:58:31	15:58:39	HSEA	60	30	45	1	0	None	LO	SI		NONE	E	OC	10	2	0-3 ft		
10/7/2013	POST		17:18:00	17:20:05	CASL	280	345		1	0	Away	TR-SW			NONE	E	PC	10	1	0-3 ft		
10/8/2013	OTHR		7:45:00	8:00:37	CASL				36						OTHER	G	PC	0	1	0-3 ft		At Delta 7-north package, 9-south package, 19-fence
10/8/2013	CON		8:40:03	8:41:53	HSEA	155	130	85	2	0	Parallel	SW-S			NONE	G	PC	0	1	0-3 ft		
10/8/2013	CON		8:48:17	9:00:28	HSEA	88	155	40	2	2	None	LO	RE	SI	NONE	G	PC	0	1	0-3 ft		
10/8/2013	CON	X-4	9:00:19	9:00:23	HSEA	40	20	60	1	0	Toward	SW-SW	SI		NONE	E	PC	0	1	0-3 ft		
10/8/2013	CON		9:00:51	9:02:30	CASL	20	140	55	1	0	Parallel	TR-S	TR-SW		NONE	E	PC	0	1	0-3 ft		
10/8/2013	CON	X-4	9:06:03	9:06:45	HSEA	90	45	100	1	0	Parallel	SW-S			V	E	PC	0	1	0-3 ft		
10/8/2013	CON	X-4	9:07:02	9:08:12	HSEA	50	340	45	1	1	Parallel	RE	LO	SI	V	E	PC	0	1	0-3 ft		
10/8/2013	CON		9:16:28	9:16:49	HSEA	88	155	40	1	1	None	RE			NONE	E	PC	0	1	0-3 ft		
10/8/2013	CON	NA	12:46:55	12:47:09	HSEA	50	275		1	0	Parallel	SW-NE	LO	DI	NONE	E	PC	0	1	0-3 ft		
10/8/2013	CON		13:03:01	13:05:02	HSEA	123	55	75	2	0	None	MI			NONE	E	PC	0	1	0-3 ft		
10/8/2013	CON		13:07:44	13:08:33	HSEA	460	150	300	1	1	None	RE			NONE	E	PC	0	1	0-3 ft		
10/8/2013	CON	NA	13:09:47	13:10:01	HSEA	70	330		1	1	None	RE			NONE	E	PC	0	1	0-3 ft		
10/8/2013	CON		13:10:38	13:10:45	HSEA	60	160	30	1	1	None	RE	DI		NONE	E	PC	0	1	0-3 ft		
10/8/2013	CON	NA	13:49:56	13:50:49	HSEA	45	350		1	0	Away	LO	MI		NONE	E	PC	0	1	0-3 ft		
10/8/2013	CON		14:07:08	14:07:21	HSEA	55	110	85	1	1	None	RE			NONE	E	PC	0	1	0-3 ft		
10/8/2013	CON	NA	14:52:21	14:53:21	HSEA	80	275		1	0	Parallel	SW-N			NONE	E	PC	0	1	0-3 ft		
10/8/2013	CON	NA	15:53:00	15:53:10	HSEA	60	320		1	0	Parallel	SW-S			NONE	E	PC	0	1	0-3 ft		
10/8/2013	CON	M-4	16:10:50	16:11:07	HSEA	45	100	65	1	1	Away	LO	SW-S	DI	NONE	E	PC	0	3	0-3 ft		
10/8/2013	POST		16:33:50	16:34:26	HSEA	200	130	65	1	1	None	RE			NONE	E	PC	0	1	0-3 ft		
10/9/2013	PRE		9:31:35	8:24:16	HSEA	35	20	40	2	1	None	RE	MI		NONE	G	PC	0	1	0-3 ft		

Date	Event Code	Pile	Start Time	End Time	Species	Dist. To animal (m)	Dir. To animal (deg)	Dist to pile (m)	Best num of animals	Num of juv	Relative motion	Behavior 1	Behavior 2	Behavior 3	Const Type	Visi-bility	Weather	Glare (%)	BSS	Wave ht	Swell Dir	Comments
10/9/2013	PRE		9:31:48	9:32:08	HSEA	97	45	300	1	0	None	MI			NONE	E	PC	5	1	0-3 ft		
10/9/2013	CON		10:00:15	10:02:15	CASL	100	315	250	1	0	Parallel	SW-S			NONE	E	PC	5	1	0-3 ft		
10/9/2013	CON		10:17:55	10:19:03	HSEA	10	270	150	1	1	None	MI			NONE	E	PC	5	1	0-3 ft		
10/9/2013	CON	X-6	10:27:58	10:28:15	HSEA	50	45	30	1	0	Toward	SW-NW	RE		NONE	E	PC	0	1	0-3 ft		
10/9/2013	CON	NA	11:07:50	11:08:29	HSEA	20	35	170	1	1	None	MI			NONE	E	PC	5	1	0-3 ft		
10/9/2013	CON	T-6	11:40:15	11:40:31	HSEA	55	25	45	1	1	Away	SW-N	LO	SI	I	E	PC	0	3	0-3 ft		
10/9/2013	CON	R-6	11:53:43	11:54:44	HSEA	55	25	45	1	1	Away	SW-N	LO	SI	I	E	PC	0	1	0-3 ft		
10/9/2013	CON	R-6	11:55:30	11:56:09	HSEA	10	0	50	1	1	None	MI			I	E	PC	5	1	0-3 ft		
10/9/2013	CON	NA	12:45:22	12:45:46	HSEA	15	180	30	2	2	None	MI			NONE	E	PC	5	1	0-3 ft		
10/9/2013	CON	M-6	12:52:40	12:52:41	HSEA	5	200	40	1	1	None	MI			NONE	E	PC	5	1	0-3 ft		
10/9/2013	CON	M-6	12:54:32	12:54:55	HSEA	72	80	100	1	1	None	FL	SI		I	E	PC	0	1	0-3 ft		
10/9/2013	CON	M-6	13:02:38	13:02:43	HSEA	30	315	50	1	1	Toward	SW-W			I	E	PC	5	1	0-3 ft		likely same juvenile as before
10/9/2013	CON	M-6	13:06:56	13:06:57	HSEA	30	0	60	1	0	None	FO			I	E	PC	5	1	0-3 ft		
10/9/2013	CON	M-6	13:07:52	13:09:24	HSEA	100	60	250	1	0	None	FL			I	E	PC	5	1	0-3 ft		
10/9/2013	CON	M-6	13:13:18	13:13:55	HSEA	70	70	100	1	1	None	FL	SI		I	E	PC	0	1	0-3 ft		
10/9/2013	CON	M-6	13:15:27	13:15:35	HSEA	15	90	35	1	1	Toward	LO	DI		I	E	PC	0	1	0-3 ft		Looked up at Observer and gently dove
10/9/2013	CON	M-6	13:17:53	13:20:02	HSEA	90	160	30	1	1	None	DI			NONE	E	PC	5	1	0-3 ft		
10/9/2013	CON	NA	13:27:59	13:29:21	HSEA	80	45	80	1	1	Toward	SW-W			NONE	E	PC	5	1	0-3 ft		
10/9/2013	CON	J-06	13:33:16	13:33:18	HSEA	40	90	100	1	1	None	FL			NONE	E	PC	5	1	0-3 ft		
10/9/2013	CON	J-6	13:36:11	13:36:14	HSEA	50	180	100	1	0	Away	SW-N			I	E	PC	5	1	0-3 ft		
10/9/2013	CON	J-6	13:37:38	13:37:52	HSEA	250	100	275	1		Away	SW-S	DI		I	E	PC	0	1	0-3 ft		
10/9/2013	CON	J-6	13:38:49	13:39:00	HSEA	200	90	350	1	0	Parallel	SW-S			I	E	PC	5	1	0-3 ft		
10/9/2013	CON	J-6	13:59:44	14:01:05	HSEA	200	160	400	1	0	Toward	SW-N			NONE	E	PC	5	1	0-3 ft		
10/9/2013	CON	X-5	14:25:00	14:25:54	HSEA	150	275	350	1	0	Parallel	SW-SE			I	E	PC	5	1	0-3 ft		
10/9/2013	CON	V-5	14:32:33	14:33:35	HSEA	100	170	400	1	0	Toward	SW-N			NONE	E	PC	5	1	0-3 ft		
10/9/2013	CON	V-5	14:34:38	14:36:13	HSEA	70	275	25	2	0	None	MI			NONE	E	PC	5	1	0-3 ft		
10/9/2013	CON	V-5	15:00:41	15:02:07	CASL	100	275	500	1	0	Toward	SW-S			NONE	E	PC	5	1	0-3 ft		
10/9/2013	CON	V-5	15:07:56	15:08:44	HSEA	30	90	30	1	1	None	MI			NONE	E	PC	5	1	0-3 ft		
10/9/2013	CON	V-5	15:11:34	15:12:15	HSEA	15	90	50	1	1	None	MI			NONE	E	PC	5	1	0-3 ft		
10/9/2013	CON	V-5	15:15:18	15:16:22	HSEA	5	0	100	1	1	None	MI			I	E	PC	5	1	0-3 ft		
10/9/2013	CON	V-5	15:16:24	15:17:27	HSEA	70	160	250	2		Parallel	SW-N	DI		I	E	PC	5	1	0-3 ft		
10/9/2013	CON	V-5	15:17:29	15:18:16	HSEA	50	280	50	1	1	None	DI			I	E	PC	5	1	0-3 ft		
10/9/2013	CON	NA	15:23:14	15:23:54	HSEA	70	90	40	1		None	MI			NONE	E	PC	5	1	0-3 ft		
10/9/2013	CON	V-5	15:25:58	15:26:52	HSEA	20	0	220	1	1	Toward	SW-S			I	E	PC	5	1	0-3 ft		
10/9/2013	CON	V-5	15:34:18	15:34:31	HSEA	30	100	70	2	0	Parallel	LO	SW-N		NONE	E	PC	0	1	0-3 ft		
10/9/2013	CON	NA	15:35:55	15:37:11	HSEA	120	136	30	1	1	Toward	SW-NE			NONE	E	PC	5	1	0-3 ft		

Date	Event Code	Pile	Start Time	End Time	Species	Dist. To animal (m)	Dir. To animal (deg)	Dist to pile (m)	Best num of animals	Num of juv	Relative motion	Behavior 1	Behavior 2	Behavior 3	Const Type	Visi-bility	Weather	Glare (%)	BSS	Wave ht	Swell Dir	Comments
10/9/2013	CON	NA	15:55:38	15:58:01	HSEA	30	90	300	1		Parallel	SW-N	DI		NONE	E	PC	5	1	0-3 ft		
10/9/2013	CON	R-5	16:08:37	16:09:29	HSEA	40	290	60	1		None	MI			I	E	PC	5	1	0-3 ft		
10/9/2013	CON	R-5	16:13:07	16:14:44	HSEA	70	270	70	1	1	Toward	SW-NE			NONE	E	PC	5	1	0-3 ft		
10/9/2013	CON	M-5	16:29:59	16:30:42	HSEA	80	260	30	1		None	DI			I	E	PC	5	1	0-3 ft		
10/10/2013	CON	X-3	9:09:11	9:09:59	HSEA	200	0	200	1	0	Parallel	SW-E			NONE	E	OC	0	1	0-3 ft		
10/10/2013	CON	X-3	9:54:38	9:55:47	HSEA	370	110	200	1	0	Parallel	SW-S			NONE	E	OC	0	1	0-3 ft		
10/10/2013	CON	N-37	10:48:00	10:48:50	HSEA	150	90	200	1	1	None	MI			NONE	E	OC	0	1	0-3 ft		
10/10/2013	CON	V-3	11:14:28	11:14:30	HSEA	60	90	40	1	0	None	MI			NONE	E	OC	0	1	0-3 ft		
10/10/2013	CON	V-3	11:27:17	11:28:32	HSEA	170	90	30	1	0	None	MI			NONE	E	OC	0	1	0-3 ft		
10/10/2013	CON	V-3	11:28:44	11:29:56	HSEA	100	110	70	1	0	None	SW-S			NONE	E	OC	0	1	0-3 ft		
10/10/2013	CON	T-3	11:45:13	11:49:13	HSEA	87	90	15	1	1	Toward	MI			V	E	OC	0	1	0-3 ft		
10/10/2013	CON	T-3	11:58:29	11:59:25	HSEA	5	70	15	1	1	None	SI			NONE	E	OC	0	1	0-3 ft		
10/10/2013	CON	M-3	13:29:46	13:29:57	HSEA	85	45	60	1	0	None	SW-NW	LO		NONE	E	PC	5	1	0-3 ft		
10/10/2013	CON	M-3	13:51:37	13:51:51	HSEA	30	30	70	1	1	Parallel	SW-N			V	E	PC	5	1	0-3 ft		
10/10/2013	CON	M-3	14:12:27	14:13:33	HSEA	20	180	40	1	0	None	MI			NONE	E	OC	0	1	0-3 ft		
10/10/2013	CON		15:57:11	15:57:16	CASL	20	90		1	0	None	SW-S			NONE	E	OC	0	1	0-3 ft		
10/10/2013	CON	X-2	16:34:46	16:34:53	HSEA	100	80	180	1	1	None	MI	SI		V	E	OC	0	1	0-3 ft		gps #2
10/10/2013	CON	X-2	16:39:47	16:40:58	HSEA	100	0	270	1	1	None	SI			NONE	E	OC	0	1	0-3 ft		
10/10/2013	CON		16:52:52	16:54:09	CASL	60	190		1	0	None	SW-S			NONE	E	OC	0	1	0-3 ft		
10/10/2013	CON		17:47:39	17:47:40	HSEA	8	90	10	1	1	None	SI			NONE	E	OC	0	1	0-3 ft		
10/11/2013	PRE		8:10:59	8:12:05	HSEA	235	90	150	1		None	SW-N			NONE	E	OC	0	1	0-3 ft		
10/11/2013	CON	V-2	8:31:38	8:32:10	HSEA	80	110	80	1	1	None	RE	DI		NONE	E	OC	0	1	0-3 ft		Dove as work skiff approached
10/11/2013	CON		8:34:55	8:35:45	HSEA	320	190	370	1		None	MI			NONE	E	OC	0	1	0-3 ft		
10/11/2013	CON	V-2	8:36:04	8:36:26	HSEA	70	130	70	1	1	None	RE			NONE	E	OC	0	1	0-3 ft		
10/11/2013	CON	V-2	8:38:19	8:38:29	HSEA	50	110	50	1	1	Toward	SW-NW			V	E	OC	0	1	0-3 ft		
10/11/2013	CON	V-2	8:40:24	8:41:17	HSEA	400	225	470	1		None	SW-NW			V	E	OC	0	1	0-3 ft		
10/11/2013	CON		8:54:45	8:56:36	HSEA	350	190	390	1		None	SI			NONE	E	OC	0	1	0-3 ft		
10/11/2013	CON		9:14:47	9:14:53	HSEA	70	90	40	1			SW-E			NONE	E	OC	0	1	0-3 ft		
10/11/2013	CON	T-2	9:16:55	9:17:41	HSEA	65	80	65	1	1	Parallel	SW-NW			NONE	E	OC	0	1	0-3 ft		
10/11/2013	CON	T-2	9:25:32	9:25:35	HSEA	20	90	190	1	0	None	LO	SI		NONE	E	OC	0	1	0-3 ft		
10/11/2013	CON	T-2	10:04:46	10:18:57	HSEA	100	0	200	1	0	Away	SW-W	LO		V	E	OC	0	1	0-3 ft		In between vibing T-2
10/11/2013	CON	T-2	10:12:20	10:12:55	HSEA	55	70	55	1	1	None	LO	DI		V	E	OC	0	1	0-3 ft		
10/11/2013	CON	T-2	10:39:14	10:40:05	HSEA	15	90	40	1			SW-S			NONE	E	OC	0	1	0-3 ft		

Date	Event Code	Pile	Start Time	End Time	Species	Dist. To animal (m)	Dir. To animal (deg)	Dist to pile (m)	Best num of animals	Num of juv	Relative motion	Behavior 1	Behavior 2	Behavior 3	Const Type	Visi-bility	Weather	Glare (%)	BSS	Wave ht	Swell Dir	Comments
10/11/2013	CON	T-2	10:39:19	10:40:04	HSEA	50	45	60	1			MI	DI		NONE	E	OC	0	1	0-3 ft		
10/11/2013	CON	T-2	10:46:06	10:47:04	HSEA	15	0	15	1		None	DI	MI		NONE	E	OC	0	1	0-3 ft		
10/11/2013	CON	T-2	10:48:54	10:48:55	HSEA	35	0	30	1		None	DI	MI		NONE	E	OC	0	1	0-3 ft		
10/11/2013	CON	T-2	11:18:28	11:18:44	HSEA	65	100	65	1	1	Toward	SW-W	DI		NONE	E	OC	0	1	0-3 ft		
10/11/2013	CON	T-2	11:29:37	11:29:48	HSEA	250	100	215	1	0	Away	SW-SW			NONE	E	OC	0	1	0-3 ft		
10/11/2013	CON	T-2	11:37:40	11:37:46	HSEA	40	30	35	1	1	None	RE	LO		NONE	E	OC	0	1	0-3 ft		
10/11/2013	CON	R-2	13:05:59	13:06:32	CASL	200	170	350	1	0	Away	SW-S			NONE	E	OC	0	1	0-3 ft		
10/11/2013	CON	T-2	13:12:59	13:13:58	HSEA	35	0	30	1		None	SW-E			NONE	E	OC	0	1	0-3 ft		
10/11/2013	CON	T-2	13:16:07	13:16:24	HSEA	35	0	30	1	1		FL	SI		NONE	E	OC	0	1	0-3 ft		
10/11/2013	CON	R-2	13:36:24	13:36:24	HSEA	35	0	30	1		None	DI			V	E	OC	0	1	0-3 ft		
10/11/2013	CON	V-16	14:16:43	14:17:50	HSEA	70	0	15	1			SW-W			NONE	E	OC	0	1	0-3 ft		
10/11/2013	CON	M-2	14:24:46	14:24:53	HSEA	25	0		1		None	SW-W			NONE	E	OC	0	1	0-3 ft		
10/11/2013	CON	V-18	14:43:37	14:43:44	HSEA	70	270	90	1	0	Away	SW-NE			I	E	OC	0	1	0-3 ft		right before impact
10/11/2013	CON	V-18	14:47:15	14:47:17	HSEA	100	0	15	1		None	DI			NONE	E	OC	0	1	0-3 ft		
10/11/2013	CON	V-18	14:49:30	14:49:42	HSEA	50	0		1		None	SW-SW	DI		NONE	E	OC	0	1	0-3 ft		
10/11/2013	CON	M-2	15:18:46	15:31:56	HSEA	10	270	115	1	0	Parallel	SW-N	DI		V	E	OC	0	1	0-3 ft		observer boats course, n transects, caused animal to dive
10/11/2013	CON	M-2	15:18:49	15:18:52	HSEA	125	20	250	1	0	Away	SW-N	RE		V	E	OC	0	1	0-3 ft		prior to impact ofx-16
10/11/2013	CON	X-23	17:15:37	17:27:39	HSEA	40	180	70	1	1	Parallel	SW-E	DI		SSI	E	OC	0	1	0-3 ft		
10/11/2013	CON	X-23	17:17:52	17:17:58	HSEA	50	60	110	1	1	None	RE	DI		SSI	E	OC	0	1	0-3 ft		
10/11/2013	POST	NA	17:58:00	17:58:10	HSEA	30	270		1	1	None	RE	SI		NONE	E	OC	0	1	0-3 ft		
10/12/2013	PRE	X-24	8:17:27	8:21:25	HSEA	10	270	52	1	1	None	LO	DI		NONE	E	OC	0	1	0-3 ft		OBSERVED ANIMAL TWICE, DOING TRANSECTS
10/12/2013	CON	X-24	8:19:29	8:19:41	HSEA	50	180	400	1	0	Toward	SW-N			NONE	E	OC	0	1	0-3 ft		
10/12/2013	CON	X-24	8:50:11	8:55:17	HSEA	50	0	160	1	0	Away	SW-W			NONE	E	OC	0	1	0-3 ft		AFTER IMPACT
10/12/2013	CON	X-24	8:56:38	8:56:46	HSEA	30	40	120	1	0	Away	SW-S			NONE	E	OC	0	1	0-3 ft		JUST AFTER IMPACT
10/12/2013	OTHR	X-24	9:30:47	9:39:31	CASL				62			HO	RE		OTHER	E	OC	0	1	0-3 ft		10 on north package, 14 south package, 38 WRA fence
10/12/2013	OTHR	X-24	9:41:09	9:41:11	STSL				1		None	HO	RE		OTHER	E	OC	0	1	0-3 ft		On north package, with 10 CASL
10/12/2013	CON	X-24	9:48:38	9:54:38	HSEA	700	180	900	1	0	Parallel	SW-E	DI		NONE	E	OC	0	1	0-3 ft		
10/12/2013	CON	X-24	10:54:50	10:55:01	CASL	50	270	300	1	0	Parallel	SW-S	DI		NONE	G	OC	0	2	0-3 ft		
10/12/2013	CON	X-24	11:02:30	11:03:00	HSEA	75	180	400	1	1	Parallel	SW-W	DI		NONE	G	OC	0	2	0-3 ft		

Date	Event Code	Pile	Start Time	End Time	Species	Dist. To animal (m)	Dir. To animal (deg)	Dist to pile (m)	Best num of animals	Num of juv	Relative motion	Behavior 1	Behavior 2	Behavior 3	Const Type	Visi-bility	Weather	Glare (%)	BSS	Wave ht	Swell Dir	Comments
10/12/2013	CON	V.1W-1	12:49:19	12:49:25	HSEA	50	180	500	1	0	Toward	SW-W			NONE	G	OC	0	2	0-3 ft		
10/12/2013	PRE	NA	8:13:10	8:21:08	HSEA	50	30		1		Away	SW-N	DI	SW-W	NONE	G	OC	0	1	0-3 ft		
10/12/2013	CON	NA	8:17:23	8:17:54	HSEA	180			3	0	Parallel	SW-N	DI		NONE	G	OC	0	1	0-3 ft		
10/12/2013	CON	NA	8:27:08	8:27:39	HSEA	40	100		1	0	Parallel	SW-N	DI		NONE	M	OC	0	1	0-3 ft		
10/12/2013	CON	NA	8:32:19	8:32:50	HSEA	100	60		1	0	Parallel	SW-S	DI		NONE	P	F	0	1	0-3 ft		
10/12/2013	CON	NA	8:50:00	8:53:59	CASL	20	190		1	0	None	TR-SW	DI		NONE	P	F	0	1	0-3 ft		Animal appears to be travelling from north perimeter fence to south perimeter
10/12/2013	CON	NA	9:00:05	9:00:26	HSEA	60	220		1	0	Toward	SW-W	DI		NONE	P	F	0	1	0-3 ft		
10/12/2013	CON	NA	9:06:22	9:06:32	HSEA	105	90		1	0	Toward	RE	DI		NONE	M	OC	0	1	0-3 ft		
10/12/2013	CON	NA	9:10:30	9:14:50	HSEA	200	150		1	0	Toward	RE	SW-N	DI	NONE	M	OC	0	1	0-3 ft		
10/14/2013	CON	J-2	9:17:05	9:17:45	HSEA	40	345	30	1	0	Toward	SW-S	DI		NONE	E	OC	0	1	0-3 ft		
10/12/2013	CON	J-2	9:22:18	9:22:29	HSEA	200	240	350	1	0	None	RE	SI		V	M	OC	0	1	0-3 ft		
10/12/2013	CON		10:03:23	10:07:24	HSEA	300	180		1	0	None	HO			NONE	M	OC	0	1	0-3 ft		Animal is hauled out on dock near communications tower
10/12/2013	CON	NA	10:19:38	10:22:15	HSEA	180	160		1	0	None	SW-S	DI		NONE	M	PC	0	1	0-3 ft		
10/14/2013	CON		10:22:57	10:23:17	HSEA	45	0		1		None	SW-SW			NONE	E	OC	0	1	0-3 ft		
10/12/2013	CON	NA	10:50:14	10:50:25	HSEA	160	75		1	0	Away	SW-S	DI		NONE	M	PC	0	1	0-3 ft		
10/12/2013	CON	NA	11:10:08	11:11:04	HSEA	240	170		2	0	None	RE	DI		NONE	M	PC	5	1	0-3 ft		
10/14/2013	CON		11:32:43	11:34:03	HSEA	50	45		1		None	SW-N			NONE	E	OC	0	1	0-3 ft		
10/12/2013	CON	NA	11:32:47	11:32:58	HSEA	80	18		1	0	Parallel	SW-NE	DI		NONE	M	PC	5	1	0-3 ft		
10/12/2013	CON	NA	11:37:23	11:37:45	HSEA	150	160		2	0	None	LO	DI		NONE	G	PC	5	1	0-3 ft		
10/14/2013	CON	X-4	11:52:53	11:53:00	HSEA	40	0	25	1		None	DI	RE		I	E	OC	0	1	0-3 ft		
10/14/2013	CON	X-4	11:58:40	11:58:42	HSEA	30	0	22	1		None	DI	RE		I	E	OC	0	1	0-3 ft		
10/14/2013	CON	X-4	12:01:08	12:01:15	HSEA	30	0	25	1		Parallel	DI	MI	SW-N	I	E	OC	0	1	0-3 ft		
10/12/2013	CON	X-4	12:03:12	12:03:23	HSEA	120	90	80	1	0	None	LO	SI		I	G	PC	5	1	0-3 ft		
10/12/2013	CON	NA	12:55:12	12:55:25	HSEA	90	80		1	0	Parallel	SW-NW	DI		NONE	G	S	5	1	0-3 ft		
10/12/2013	CON	V-4	13:06:01	13:06:13	HSEA	40	270	80	1	0	Toward	SW-S	DI		I	G	S	10	1	0-3 ft		
10/12/2013	CON	NA	13:43:35	13:43:46	HSEA	30	150		1	0	Toward	SW-NW	DI		NONE	G	S	10	1	0-3 ft		
10/12/2013	CON	V.1W-4	13:56:24	13:56:40	HSEA	60	90	350	1	0	Toward	SW-N	DI		V	G	S	10	1	0-3 ft		
10/12/2013	CON	R-4	14:03:48	14:04:02	HSEA	40	180	40	1	0	None	LO			I	G	S	10	1	0-3 ft		
10/12/2013	CON	R-4	14:08:53	14:09:04	HSEA	100	90	250	1	0	None	LO			I	G	S	10	1	0-3 ft		
10/12/2013	POST	NA	15:05:05	15:05:21	HSEA	315	180		1	0	None	LO	SP	DI	NONE	G	S	10	1	0-3 ft		
10/12/2013	POST	NA	15:10:03	15:10:45	HSEA	300	110		1	0	None	RE			NONE	G	S	10	1	0-3 ft		

Date	Event Code	Pile	Start Time	End Time	Species	Dist. To animal (m)	Dir. To animal (deg)	Dist to pile (m)	Best num of animals	Num of juv	Relative motion	Behavior 1	Behavior 2	Behavior 3	Const Type	Visi-bility	Weather	Glare (%)	BSS	Wave ht	Swell Dir	Comments
10/12/2013	POST	NA	15:14:13	15:14:44	HSEA	30	270		1	0	Toward	SW-W			NONE	G	S	10	1	0-3 ft		
10/12/2013	POST	NA	15:17:09	15:17:30	HSEA	90	80		1	0	Away	SW-S	DI		NONE	G	S	20	1	0-3 ft		
10/15/2013	PRE	NA	8:19:52	8:20:03	HSEA	5	330		1	0	None	LO	DI		NONE	P	F	0	1	0-3 ft		Animal dove on west side of boat. We are 70 meters west of pile field.
10/15/2013	PRE	NA	8:27:54	8:30:31	HSEA	70	80		1	0	Away	SW-N	DI		NONE	P	F	0	1	0-3 ft		Animal is swimming among the piles
10/15/2013	CON	NA	8:31:40	8:31:51	HSEA	90	180		1	0	Toward	SW-E	DI		NONE	P	F	0	1	0-3 ft		
10/15/2013	CON	NA	8:43:37	8:54:16	HSEA	200	330		1	0	Away	SW-NE	DI		NONE	P	F	0	1	0-3 ft		We are 70 m due west of rig 2
10/15/2013	CON	NA	8:53:20	8:54:39	CASL	40	300	100	1	0	Parallel	TR-S			NONE	P	F	0	1	0-3 ft		60m West of bent 1
10/15/2013	CON	NA	9:05:07	9:05:13	HSEA	30	100	30	1	0	None	MI	DI		NONE	P	F	0	1	0-3 ft		
10/15/2013	CON	N/A	9:05:18	9:06:15	HSEA	35	25	30	1	1	None	LO	SI		NONE	M	F	0	0	0-3 ft		
10/15/2013	CON	X-1	9:08:58	9:09:17	HSEA	100	45	90	1	0	Parallel	SW-NW	SI		NONE	E	OC	0	1	0-3 ft		
10/15/2013	CON	X-1	9:16:52	9:17:18	HSEA	70	120	115	1	0	None	RE			NONE	E	OC	0	1	0-3 ft		
10/15/2013	CON	X-1	9:19:50	9:20:11	HSEA	60	100	70	1	0	None	RE	SI		NONE	E	OC	0	1	0-3 ft		
10/15/2013	CON	X-1	9:20:57	9:21:22	HSEA	30	90	120	1	0	None	SW-N	DI		NONE	E	OC	0	1	0-3 ft		
10/15/2013	CON	X-1	9:23:01	9:23:04	HSEA	65	120	140	1	0	None	RE	SI		V	E	OC	0	1	0-3 ft		
10/15/2013	CON	X-1	9:25:09	9:25:26	HSEA	70	60	130	1	0		SW-N			V	E	OC	0	1	0-3 ft		
10/15/2013	CON	NA	9:41:11	9:41:18	HSEA	50	80		1	0	Away	SW-SW	DI		NONE	P	F	0	1	0-3 ft		
10/15/2013	CON		10:05:37	10:05:53	HSEA	20	340		1	0	Toward	SW-SE	RE	DI	NONE	E	OC	0	1	0-3 ft		
10/15/2013	CON	NA	10:29:05	10:29:08	HSEA	5	90		1	0	Away	SW-N	DI		NONE	P	F	0	1	0-3 ft		
10/15/2013	CON	V.1W-4	10:36:15	10:36:34	HSEA	30	25	45	1	1	Away	SW-E			NONE	M	F	0	1	0-3 ft		
10/15/2013	CON	NA	10:37:25	10:37:30	HSEA	30	80		1	0	Parallel	SW-S	DI		NONE	P	F	0	1	0-3 ft		
10/15/2013	CON	NA	10:46:40	10:46:48	HSEA	50	80		1	0	Parallel	SW-S	DI		NONE	P	F	0	1	0-3 ft		
10/15/2013	CON	NA	11:00:18	11:00:39	HSEA	40	90		2	1	Away	SW-S			NONE	P	F	0	1	0-3 ft		
10/15/2013	CON	NA	11:16:00	11:16:06	HSEA	90	70		1	0	Toward	SW-SW	DI		NONE	P	F	0	1	0-3 ft		
10/15/2013	CON	NA	11:27:42	11:27:47	HSEA	20	90		1	0	Away	SW-S	DI		NONE	P	F	0	1	0-3 ft		
10/15/2013	CON	NA	11:30:03	11:30:13	HSEA	90	80		1	0	Parallel	SW-N	DI		NONE	P	F	0	1	0-3 ft		
10/15/2013	CON	NA	12:08:03	12:08:07	CASL	40	150		1	0	Away	SW-SE	DI		NONE	P	F	0	1	0-3 ft		
10/15/2013	CON	V.1W-3	18:03:40	18:03:45	HSEA	80	70	30	1	0	None	LO	DI		V	G	PC	0	1	0-3 ft		
10/15/2013	POST		18:12:59	18:13:07	HSEA	30	40	80	1	0	None	LO	SI		NONE	M	F	0	0	0-3 ft		
10/16/2013	CON	NA	9:04:17	9:04:26	HSEA	10	90		1	1	Toward	SW-N	DI		NONE	G	PC	0	1	0-3 ft		

Date	Event Code	Pile	Start Time	End Time	Species	Dist. To animal (m)	Dir. To animal (deg)	Dist to pile (m)	Best num of animals	Num of juv	Relative motion	Behavior 1	Behavior 2	Behavior 3	Const Type	Visi-bility	Weather	Glare (%)	BSS	Wave ht	Swell Dir	Comments
10/16/2013	CON	NA	9:17:00	9:17:09	HSEA	5	90		1	1	Toward	LO	DI		NONE	G	PC	0	1	0-3 ft		
10/16/2013	CON	NA	9:20:27	9:20:28	HSEA	40	270		1	0	Toward	SW-N			NONE	G	PC	0	1	0-3 ft		
10/16/2013	CON	V.1W-3	9:20:52	9:21:38	HSEA	55	355	35	1	0	None	MI			NONE	G	F	0	1	0-3 ft		
10/16/2013	CON	NA	9:35:37	9:35:48	HSEA	30	180		1	0	None	LO	SI		NONE	G	PC	0	1	0-3 ft		
10/16/2013	CON	NA	9:39:04	9:39:16	HSEA	100	90		1	0	Toward	SW-N			NONE	G	PC	0	1	0-3 ft		
10/16/2013	CON	NA	9:39:28	9:39:38	HSEA	30	280	10	1	1	Parallel	SW-E	RE	SI	NONE	M	PC	0	0	0-3 ft		
10/16/2013	CON	V.1W-3	9:43:41	9:44:10	HSEA	65	350	40	1	1	None	MI			NONE	G	F	0	1	0-3 ft		
10/16/2013	CON	NA	9:44:02	9:44:09	HSEA	5	0		1	0	None	LO	SI		NONE	G	PC	0	1	0-3 ft		
10/16/2013	CON	NA	9:47:27	9:47:28	HSEA	10	160		1	1	None	LO	RE		NONE	G	PC	0	1	0-3 ft		
10/16/2013	CON	V.1W-3	10:08:01	10:08:07	HSEA	50	25	110	1	0	Parallel	SW-W	DI		I	M	PC	0	0	0-3 ft		light brown body color
10/16/2013	CON	V.1W-3	10:19:00	10:19:07	HSEA	50	90	40	1	0	None	LO	SI		I	G	PC	0	1	0-3 ft		
10/16/2013	CON	NA	10:21:42	10:22:08	HSEA	35	0	60	1	0	Away	SW-N	DI		NONE	M	PC	0	0	0-3 ft		
10/16/2013	CON	V.1W-3	10:23:54	10:24:15	HSEA	40	0	50	2	0	None	LO	DI		NONE	M	PC	0	0	0-3 ft		
10/16/2013	CON	NA	10:27:34	10:27:40	HSEA	50	110		1	1	None	LO			NONE	G	PC	0	1	0-3 ft		
10/16/2013	CON	NA	10:37:30	10:39:05	HSEA	50	90		1		None	LO	SI		NONE	G	PC	0	1	0-3 ft		
10/16/2013	CON	NA	10:41:12	10:43:21	HSEA	40	70		1		None	LO	SI		NONE	G	PC	0	1	0-3 ft		
10/16/2013	CON	V.1W-3	10:44:03	10:44:24	HSEA	60	20	100	1	1	Parallel	SW-E	DI		NONE	M	PC	0	0	0-3 ft		
10/16/2013	CON	NA	11:14:03	11:14:20	HSEA	40	30		1	0	None	RE	SI		NONE	G	PC	0	1	0-3 ft		
10/16/2013	CON	NA	11:55:18	12:13:58	HSEA	100	110		1	0	None	RE	SI		NONE	G	PC	0	1	0-3 ft		
10/16/2013	CON	NA	12:27:38	12:27:42	HSEA	85	60	125	1	0	None	MI	LO		NONE	G	PC	0	1	0-3 ft		
10/16/2013	CON	NA	12:37:07	12:37:17	HSEA	180	70		1	0	Away	SW-NW			NONE	G	PC	0	1	0-3 ft		
10/16/2013	CON	NA	12:46:08	12:46:22	HSEA	100	70		1	0	None	LO	SI		NONE	G	PC	5	1	0-3 ft		
10/16/2013	CON	NA	13:07:54	13:08:01	HSEA	135	112	55	1	1	None	LO	DI		NONE	G	PC	25	1	0-3 ft		
10/16/2013	CON	NA	13:12:22	13:12:32	HSEA	165	180	65	1	1	None	LO	SI		NONE	G	PC	25	1	0-3 ft		
10/16/2013	CON	NA	13:14:44	13:15:04	HSEA	165	180	75	1	1	Toward	LO	SW-E	SI	NONE	G	PC	25	1	0-3 ft		
10/16/2013	CON	NA	13:16:58	13:17:01	HSEA	130	135	80	1	0	Toward	SW-S	DI		NONE	G	PC	25	1	0-3 ft		
10/16/2013	CON	R-1	13:18:54	13:19:26	HSEA	250	80	310	1	0	None	RE			NONE	G	S	50	1	0-3 ft		
10/16/2013	CON	R-1	13:20:59	13:21:12	HSEA	210	150	253	1	0	Away	SW-S			V	G	S	50	1	0-3 ft		
10/16/2013	CON	R-1	13:29:31	13:29:40	HSEA	125	135	120	1	1	None	LO	SI		V	G	PC	25	1	0-3 ft		
10/16/2013	CON	R-1	13:32:56	13:33:01	HSEA	230	90	273	1	0	Parallel	SW-N			V	G	S	50	1	0-3 ft		
10/16/2013	CON		13:58:15	13:59:09	HSEA	130	150	135	1	0	Away	SW-S			NONE	E	S	0	2	0-3 ft		

Date	Event Code	Pile	Start Time	End Time	Species	Dist. To animal (m)	Dir. To animal (deg)	Dist to pile (m)	Best num of animals	Num of juv	Relative motion	Behavior 1	Behavior 2	Behavior 3	Const Type	Visi-bility	Weather	Glare (%)	BSS	Wave ht	Swell Dir	Comments
10/16/2013	CON	M-1	14:03:53	14:04:14	HSEA	190	170	233	1	0	Away	SW-SE	DI		NONE	G	S	50	1	0-3 ft		
10/16/2013	CON	M-1	14:06:41	14:06:47	HSEA	150	165	65	1	1	None	RE	SI		V	G	PC	25	1	0-3 ft		
10/16/2013	CON	NA	14:33:40	14:34:00	HSEA	160	170	90	1	1	None	LO	RE	SI	NONE	G	PC	25	1	0-3 ft		
10/16/2013	CON	NA	14:35:56	14:36:23	HSEA	135	135	78	2	2	None	MI	RE	DI	NONE	G	PC	25	1	0-3 ft		
10/16/2013	CON	NA	14:40:10	14:40:17	HSEA	55	155	123	1	1	None	LO	MI	SI	NONE	G	PC	25	1	0-3 ft		
10/16/2013	CON	J-1	14:56:12	14:56:25	HSEA	127	135	100	1	1	None	LO	DI		V	G	PC	25	1	0-3 ft		
10/16/2013	POST	J-1	15:08:38	15:08:53	CASL	67	135	145	1	0	Parallel	TR-S	DI		NONE	G	PC	25	1	0-3 ft		
10/16/2013	POST		15:15:26	15:15:39	HSEA	120	160		1	0	Toward	SW-N			NONE	E	S	0	2	0-3 ft		
10/16/2013	POST	NA	15:24:09	15:25:38	HSEA	135	135	45	1	1	None	LO	SI		NONE	G	PC	25	1	0-3 ft		
10/17/2013	CON	NA	9:52:09	9:52:16	HSEA	230	180		1	0	Parallel	SW-E			NONE	G	OC	10	1	0-3 ft		
10/17/2013	CON	NA	10:15:25	10:15:35	HSEA	45	10	150	1	0	None	LO	SI		NONE	G	OC	10	1	0-3 ft		Animal had reddish thick (10cm) stripe from its head to back.
10/17/2013	CON	TT-2	10:28:27	10:28:47	HSEA	150	145	200	1	0	Away	SW-SW	SI		NONE	G	OC	0	1	0-3 ft		
10/17/2013	CON	TT-2	10:31:09	10:32:03	HSEA	80	100	120	1	0	Parallel	SW-NE	DI		NONE	G	OC	0	1	0-3 ft		
10/17/2013	CON	TT-2	10:35:42	10:35:51	HSEA				1	1	None	RE	DI		NONE	G	OC	0	1	0-3 ft		Dove in response to noise of APE200 hammer
10/17/2013	CON	TT-2	10:39:31	10:40:00	HSEA	100	90	40	1	1	Parallel	SW-N			V	G	OC	10	1	0-3 ft		
10/17/2013	CON	NA	10:44:08	10:44:14	HSEA	100	90	50	1	1	None	LO			NONE	G	OC	10	1	0-3 ft		
10/17/2013	CON	Pin 3	11:04:00	11:05:00	HSEA		0	100	2	0	None	MI	DI		NONE	G	OC	0	1	0-3 ft		pulling pin piles
10/17/2013	CON	TT-3	11:04:14	11:04:43	HSEA	35	90	150	1	0	Toward	SW-E			V	G	OC	10	1	0-3 ft		
10/17/2013	CON	Pin 3	11:18:00	11:18:53	HSEA		180	50	2	0	None	SW-N	DI		NONE	G	OC	0	1	0-3 ft		pulling pin pile
10/17/2013	CON	NA	12:12:00	12:13:25	HSEA	80	90	50	1	0	None	RE			NONE	E	OC	0	1	0-3 ft		
10/17/2013	CON		13:00:39	13:01:28	HSEA	60	225		1	0	None	MI	DI		NONE	G	OC	0	1	0-3 ft		
10/17/2013	CON		13:07:51	13:08:04	HSEA	190	180		1	0	None	LO	SI		NONE	G	OC	10	1	0-3 ft		
10/17/2013	CON	NA	13:19:16	13:19:29	HSEA	40	90	100	2	0	Parallel	RE			NONE	E	OC	0	1	0-3 ft		no pile driving; moving rig
10/17/2013	CON		13:27:41	13:27:44	HSEA	80	260		1	0	None	RE	DI		NONE	G	OC	0	1	0-3 ft		
10/17/2013	CON		13:31:11	13:31:35	HSEA	50	150		1	1	Away	RE	DI		NONE	G	OC	10	1	0-3 ft		
10/17/2013	CON		13:33:21	13:34:27	HSEA	23	270		1	0	Away	RE	SW-S		NONE	G	OC	0	1	0-3 ft		
10/17/2013	CON		13:34:18	13:36:07	HSEA	139	160		1	0	Parallel	MI			NONE	G	OC	10	1	0-3 ft		
10/17/2013	CON		13:34:58	13:35:16	HSEA	40	300		1		None	SW-S			NONE	G	OC	0	1	0-3 ft		
10/17/2013	CON		13:36:51	13:37:41	HSEA	25	240		1	0	None	RE	SI		NONE	G	OC	0	1	0-3 ft		
10/17/2013	CON		13:44:34	13:44:45	HSEA	119	140		1	0	None	LO	DI		NONE	G	OC	10	1	0-3 ft		Nose in the air

Date	Event Code	Pile	Start Time	End Time	Species	Dist. To animal (m)	Dir. To animal (deg)	Dist to pile (m)	Best num of animals	Num of juv	Relative motion	Behavior 1	Behavior 2	Behavior 3	Const Type	Visi-bility	Weather	Glare (%)	BSS	Wave ht	Swell Dir	Comments
10/17/2013	CON		13:47:00	13:47:13	HSEA	132	150		1	0	Away	SW-S	DI		NONE	G	OC	10	1	0-3 ft		
10/17/2013	CON		13:52:35	13:53:09	HSEA	30	225		1	0	None	RE	SI		NONE	G	OC	0	1	0-3 ft		
10/17/2013	CON		13:53:31	13:53:43	HSEA	123	45		1	0	None	LO	DI		NONE	G	OC	10	1	0-3 ft		
10/17/2013	CON		14:02:12	14:02:16	HSEA	130	140		1	0	Away	SW-S	DI		NONE	G	OC	10	1	0-3 ft		
10/17/2013	CON	NA	14:04:44	14:04:57	HSEA	20	90	80	1	0	Away	DI			NONE	E	PC	0	1	0-3 ft		not pile driving; orienting rig to new template
10/17/2013	CON		14:10:32	14:10:53	HSEA	150	90		1	0	Away	SW-S			NONE	G	OC	0	1	0-3 ft		
10/17/2013	CON		14:15:05	14:15:13	HSEA	115	160		1	1	None	RE	DI		NONE	G	OC	10	1	0-3 ft		
10/17/2013	CON		14:17:17	14:17:18	HSEA	20	270		1	0	None	RE	DI		NONE	G	OC	0	1	0-3 ft		
10/17/2013	CON		14:19:47	14:20:03	HSEA	120	90		1	0	None	RE			NONE	G	OC	10	1	0-3 ft		
10/17/2013	CON	VX-62	14:26:20	14:26:33	CASL	35	340		1	0	Parallel	SW-W	DI		NONE	G	OC	0	1	0-3 ft		
10/17/2013	CON		14:28:19	14:33:48	CASL	100	140		1	0	Away	TR-S			NONE	G	OC	10	1	0-3 ft		
10/17/2013	CON		14:58:34	14:58:42	HSEA	160	150		1	0	Away	SW-S			NONE	G	OC	10	1	0-3 ft		
10/17/2013	CON	VX-62	14:59:38	14:59:53	HSEA	70	90		1	0	Parallel	MI			NONE	G	OC	0	1	0-3 ft		
10/17/2013	CON	NA	15:19:21	15:21:41	HSEA	35	90	60	1	0	None	RE			NONE	E	S	30	2	0-3 ft		
10/17/2013	OTHR	na	15:24:51	15:24:55	CASL				59		None	HO			OTHER	G	OC	10	1	0-3 ft		Mammal survey. 15-19 CASL on south package, none on north package [getting ready to move out]. 40 on WRA fence
10/17/2013	OTHR	na	15:32:41	15:33:35	STSL				1	1	None	HO			OTHER	G	OC	10	1	0-3 ft		Stellar hauled out with casl on south package
10/17/2013	CON	na	15:55:42	15:55:58	HSEA	200	180	290	1	0	None	LO	SI		NONE	G	OC	10	1	0-3 ft		
10/17/2013	CON	NA	17:10:00	17:11:25	HSEA				1		None	RE			NONE	E	S	30	2	0-3 ft		
10/18/2013	PRE	NA	8:47:56	8:48:00	CASL	30	100		1	0	Away	SW-S			NONE	P	F	0	1	0-3 ft		
10/18/2013	CON	NA	9:44:02	9:44:09	CASL	150	200		1	0	Away	SW-S			NONE	P	F	0	1	0-3 ft		
10/18/2013	CON	NA	9:52:05	9:52:12	HSEA	20	190	80	1	1	None	RE	SI		NONE	G	OC	0	1	0-3 ft		
10/18/2013	CON	NA	9:56:15	9:58:18	HSEA	18	270	50	1	0	Toward	SW-E	DI		NONE	G	OC	0	1	0-3 ft		
10/18/2013	CON	NA	10:25:03	10:25:09	HSEA	10	260	50	1	1	Toward	RE	SI		NONE	G	OC	0	1	0-3 ft		Light brown/tan body color
10/18/2013	CON	NA	10:25:14	10:26:13	HSEA	45	200	70	1	0	Away	SW-SE			NONE	G	OC	0	1	0-3 ft		
10/18/2013	CON	VX-61	10:42:49	10:42:53	HSEA	35	280	40	1	0	Toward	SW-NE	SI		V	G	OC	0	1	0-3 ft		
10/18/2013	CON	VX-61	10:53:27	10:54:42	HSEA		190		1	0	Toward	SW-N	DI	SW-S	V	G	OC	0	1	0-3 ft		Changed direction through piles
10/18/2013	CON	VX-61	10:55:32	10:55:41	HSEA	7	270	38	1	1	Toward	RE	SI		V	G	OC	0	1	0-3 ft		eyes closed- same juvenile with tan body color, dove backwards

Date	Event Code	Pile	Start Time	End Time	Species	Dist. To animal (m)	Dir. To animal (deg)	Dist to pile (m)	Best num of animals	Num of juv	Relative motion	Behavior 1	Behavior 2	Behavior 3	Const Type	Visi-bility	Weather	Glare (%)	BSS	Wave ht	Swell Dir	Comments
10/18/2013	CON	NA	11:24:41	11:24:54	HSEA	40	200	70	1	0	Toward	RE	LO		NONE	G	OC	0	1	0-3 ft		
10/18/2013	CON	NA	11:32:20	11:32:31	HSEA	50	249	90	1	0	Parallel	SW-NW			NONE	G	OC	0	1	0-3 ft		
10/18/2013	CON	VX-61	11:39:31	23:41:15	HSEA	270	180	370	5	0	Away	SW-E	LO		NONE	P	OC	0	1	0-3 ft		
10/18/2013	CON	VX-61	13:06:48	13:06:54	HSEA	380	180	500	1	0	Away	SW-SE	DI		NONE	P	OC	0	1	0-3 ft		
10/18/2013	CON	NA	14:44:40	14:44:49	HSEA	20	270	39	1	0	None	UN	SI		NONE	G	OC	0	1	0-3 ft		Nose in the air-eyes closed
10/18/2013	CON	VX-63	16:29:00	16:29:51	HSEA	50	270	100	1	0	Away	TR-S	DI		NONE	G	S	0	1	0-3 ft		
10/18/2013	CON	VX-63	16:32:25	16:32:32	HSEA	200	180	200	1	0	None	SW-W	DI		NONE	G	S	0	1	0-3 ft		same individual surfacedagain 1 minute later
10/18/2013	CON	VX-63	16:56:56	16:57:03	HSEA	55	255	60	1	0	Parallel	SW-S	DI		NONE	G	S	0	1	0-3 ft		
10/18/2013	CON	VX-63	17:17:43	17:18:17	HSEA	125	218		1	0	Away	SW-E	DI		V	G	S	0	1	0-3 ft		
10/18/2013	CON	NA	17:18:50	17:19:05	HSEA	70	330	55	1	0	Parallel	SW-NE			NONE	G	S	0	1	0-3 ft		
10/19/2013	CON	NA	12:32:44	12:33:58	CASL	30	180	68	1	0	None	PO	DI		NONE	G	OC	0	1	0-3 ft		
10/19/2013	PRE	VX-63	12:55:04	12:55:22	HSEA	60	180	60	1	0	Away	RE			NONE	E	OC	10	2	0-3 ft		
10/19/2013	PRE	VX-63	13:08:45	13:08:54	HSEA	3	90	37	1	0	Away	SW-E			NONE	E	OC	10	2	0-3 ft		SWAM UNDER THE RIG-NO PILE DRIVING AT THE TIME
10/19/2013	PRE	VX-63	13:24:55	13:25:02	HSEA	10	90	26	1	0	Away	SW-E			NONE	E	OC	10	2	0-3 ft		
10/19/2013	CON	NA	13:27:00	13:27:44	HSEA	45	165	48	1	1	None	LO	DI		NONE	G	OC	0	1	0-3 ft		
10/19/2013	CON	NA	13:32:03	13:32:06	HSEA	45	180	120	1	0	None	RE	SI		NONE	G	OC	0	1	0-3 ft		
10/19/2013	CON	NA	13:40:48	13:40:53	HSEA	65	135	65	1	1	Toward	SW-S	DI		I	G	OC	0	2	0-3 ft		
10/19/2013	CON	VX-63	13:49:41	13:49:45	HSEA	5	90	25	1	0	Away	SW-E			I	E	OC	10	2	0-3 ft		
10/19/2013	CON	NA	15:41:12	15:41:28	HSEA	145	19		1	0	Away	SW-SE	DI		NONE	G	OC	0	1	0-3 ft		
10/19/2013	CON	NA	15:45:29	15:45:40	CASL	100	360		1	0	Away	TR-S			NONE	G	OC	0	1	0-3 ft		
10/19/2013	CON	NA	15:52:45	15:52:50	HSEA	100	22	75	1	1	Toward	SW-W	DI		NONE	G	OC	0	1	0-3 ft		
10/19/2013	CON	NA	16:02:47	16:02:53	HSEA	30	80	30	1	0	Away	RE			NONE	E	OC	10	1	0-3 ft		
10/19/2013	CON	NA	16:03:59	16:04:32	HSEA	150	357	45	1	1	Away	SW-N	RE		NONE	G	OC	0	1	0-3 ft		
10/19/2013	CON	NA	16:24:01	16:24:41	HSEA	150	328	5	1	1	Parallel	RE			NONE	G	OC	0	1	0-3 ft		Moving barge via cable
10/19/2013	CON	NA	16:43:26	16:43:43	HSEA	150	4	60	1	1	None	RE	SI		NONE	G	OC	0	1	0-3 ft		
10/19/2013	POST		17:11:06	17:11:26	HSEA	150	5		1	1	None	RE	DI		NONE	G	OC	0	1	0-3 ft		
10/21/2013	OTHR	NA	8:15:11	8:15:40	HSEA				8	0	None	HO			OTHER	G	S	0	1	0-3 ft		Hauled out under southern portion of Marginal Wharf
10/21/2013	PRE	NA	11:04:55	11:05:00	HSEA	30	190	130	1	0	None	RE	DI		NONE	G	OC	0	1	0-3 ft		
10/21/2013	PRE	NA	11:11:34	11:11:42	HSEA	130	0	5	1	0	None	RE	DI		NONE	G	OC	0	1	0-3 ft		

Date	Event Code	Pile	Start Time	End Time	Species	Dist. To animal (m)	Dir. To animal (deg)	Dist to pile (m)	Best num of animals	Num of juv	Relative motion	Behavior 1	Behavior 2	Behavior 3	Const Type	Visi-bility	Weather	Glare (%)	BSS	Wave ht	Swell Dir	Comments
10/21/2013	CON	NA	11:22:02	11:22:21	HSEA	120	30	100	1	1	None	RE	SI		NONE	G	OC	0	1	0-3 ft		
10/21/2013	CON		11:28:51	11:28:56	HSEA				1	0	None	LO	DI		NONE	E	OC	10	1	0-3 ft		
10/21/2013	CON	C-2	11:31:06	11:31:08	HSEA	50	110	50	1	0	None	LO	DI		NONE	M	OC	10	1	0-3 ft		
10/21/2013	CON	NA	11:37:51	11:38:07	HSEA	130	0	25	1	0	None	RE	SI		NONE	G	OC	0	1	0-3 ft		
10/21/2013	CON	NA	11:39:40	11:40:03	HSEA	130	0	25	1	0	None	RE	SI		NONE	G	OC	0	1	0-3 ft		
10/21/2013	CON	C-2	11:48:10	11:48:15	HSEA	150	90	200	1	0	Toward	SW-N	SI		V	G	OC	0	1	0-3 ft		
10/21/2013	CON	C-2	11:53:22	11:53:39	HSEA	70	300	60	1	0	None	MI	SI		V	G	OC	0	1	0-3 ft		
10/21/2013	CON	C-2.8	13:27:56	13:28:00	HSEA	60	95	55	1	0	None	MI			NONE	M	F	10	1	0-3 ft		
10/21/2013	CON		13:29:32	13:29:59	HSEA	70	0	200	1	0	None	RE			NONE	G	OC	0	1	0-3 ft		
10/21/2013	CON	C-2.8	13:30:27	13:30:43	HSEA	15	130	10	1	1	None	LO	DI		NONE	M	F	10	1	0-3 ft		
10/21/2013	CON	NA	13:30:46	13:31:13	HSEA	45	135	95	1	1	Parallel	SW-N	SI		NONE	G	OC	0	1	0-3 ft		
10/21/2013	CON	C-2.8	13:33:25	13:33:28	HSEA	65	130	60	1	0	Parallel	SW-N			NONE	M	F	10	1	0-3 ft		
10/21/2013	CON	C-2.8	13:41:54	13:42:11	HSEA	65	110	110	1	1	Away	MI			V	G	OC	0	1	0-3 ft		
10/21/2013	CON	C-2.8	13:46:15	13:46:27	HSEA	250	180	260	1	0	Parallel	SW-S			NONE	G	OC	0	1	0-3 ft		
10/21/2013	CON		13:47:38	13:47:50	HSEA	320	87	290	1	0	None	SW-S			NONE	G	OC	0	1	0-3 ft		
10/21/2013	CON		13:57:18	13:57:26	HSEA	310	90	290	1	0	None	SW-N	DI		NONE	G	OC	0	1	0-3 ft		
10/21/2013	CON		14:00:57	14:01:21	HSEA	140	20	15	1	0	Away	TR-NE	DI		NONE	G	OC	0	1	0-3 ft		
10/21/2013	CON		14:24:43	14:24:50	HSEA	130	350	60	1	0	None	RE			NONE	G	OC	0	1	0-3 ft		
10/21/2013	CON		14:28:05	14:28:10	HSEA	120	345	50	1	0	None	RE	DI		NONE	G	OC	0	1	0-3 ft		
10/21/2013	CON		14:31:56	14:32:20	HSEA	100	340	60	2	0	None	RE	DI		NONE	G	OC	0	1	0-3 ft		
10/21/2013	CON		14:44:21	14:44:30	HSEA	180	244	300	1	0	None	LO	SI		NONE	G	OC	0	1	0-3 ft		
10/21/2013	CON		14:51:00	14:51:18	HSEA	250			1	0	None	RE	DI		NONE	G	OC	0	1	0-3 ft		
10/21/2013	CON	NA	14:51:53	14:51:56	HSEA	50	145	56	1	1	Toward	SW-SW	SI		NONE	G	OC	0	1	0-3 ft		
10/21/2013	CON	V.X-64	14:52:54	14:53:23	HSEA	45	270	38	1	0	Away	SW-SW			NONE	G	OC	0	2	0-3 ft		
10/21/2013	CON	NA	14:53:03	14:53:08	HSEA	70	165	55	1	1	None	RE	SI		NONE	G	OC	0	1	0-3 ft		
10/21/2013	CON	B-3	14:54:57	14:55:20	HSEA	30	0	90	1	0	Away	SW-S	DI		NONE	G	OC	0	1	0-3 ft		Stabbing
10/21/2013	CON	NA	14:55:52	14:55:56	HSEA	45	140	65	1	1	Parallel	SW-N	DI		NONE	G	OC	0	1	0-3 ft		
10/21/2013	CON	NA	14:57:45	14:57:51	HSEA	130	10	130	1	1	Away	SW-N	DI		NONE	G	OC	0	1	0-3 ft		
10/21/2013	CON	NA	15:02:35	15:02:59	HSEA	78	15	159	1	0	None	MI			NONE	G	OC	0	1	0-3 ft		
10/21/2013	CON	V.X-64	15:09:50	15:10:18	HSEA	45	270	59	1	0	Toward	SW-NW			NONE	G	OC	0	2	0-3 ft		

Date	Event Code	Pile	Start Time	End Time	Species	Dist. To animal (m)	Dir. To animal (deg)	Dist to pile (m)	Best num of animals	Num of juv	Relative motion	Behavior 1	Behavior 2	Behavior 3	Const Type	Visi-bility	Weather	Glare (%)	BSS	Wave ht	Swell Dir	Comments
10/21/2013	CON	V.X-64	15:21:27	15:21:39	HSEA	40	200	80	1	0	Parallel	SW-NW			NONE	G	OC	0	2	0-3 ft		
10/21/2013	CON	V.X-64	15:36:06	15:36:18	HSEA	45	340	40	1	0	Away	RE			NONE	G	OC	0	2	0-3 ft		
10/21/2013	CON	B-3	15:41:53	15:42:23	HSEA	100	0	250	2	0	None	SW-W	DI		NONE	G	OC	0	1	0-3 ft		
10/21/2013	CON	V.X-64	15:49:02	15:49:41	HSEA	55	340	20	1	0	Toward	MI			NONE	G	OC	0	2	0-3 ft		
10/21/2013	CON		15:49:14	15:54:45	HSEA	200	90	300	2	0	None	SW-N	DI		NONE	G	OC	0	1	0-3 ft		
10/21/2013	CON	NA	15:54:54	15:54:57	HSEA	75	15	150	2	2	Away	MI			NONE	G	OC	0	1	0-3 ft		
10/21/2013	CON		15:58:51	15:59:11	HSEA	60	330	60	1	0	None	SW-SW	DI		NONE	G	OC	0	1	0-3 ft		
10/21/2013	CON	V.X-64	15:59:02	15:59:22	HSEA	30	270	65	1	1	None	RE			NONE	G	OC	0	2	0-3 ft		
10/21/2013	CON	C-2.8	16:01:16	16:02:49	HSEA	60	90	55	1	1	Toward	MI	SW-E		NONE	M	F	10	1	0-3 ft		
10/21/2013	CON	A-2	16:14:07	16:14:08	HSEA	30	90	100	1	0	None	SW-W			NONE	G	OC	0	1	0-3 ft		
10/21/2013	CON	A-2	16:38:28	16:38:46	HSEA	15	90	15	1	1	None	LO	SI		NONE	M	F		1	0-3 ft		
10/21/2013	CON	V.X-64	16:45:44	16:58:16	HSEA	30	180	21	1	0	None	MI	SI		NONE	G	OC	0	1	0-3 ft		Constantly popping up near the Rig.
10/21/2013	CON	A-2	16:50:55	16:51:13	HSEA	45	30	45	1	0	None	LO			NONE	M	F		1	0-3 ft		
10/21/2013	MS	V.X-64	16:58:26	16:59:20	HSEA	40	180	20	1	0	None	MI	SI		NONE	G	OC	0	1	0-3 ft		SD due to seal 20 m N of pile. Construction did not resume since it was too close to sunset. Seal not resighted.
10/21/2013	POST	V.X-64	17:00:51	17:01:02	HSEA	50	180	50	1	0	None	DI			NONE	G	OC	0	1	0-3 ft		
10/21/2013	POST	V.X-64	17:02:05	17:02:51	HSEA	300	90	300	1	0	None	SW-S			NONE	G	OC	0	1	0-3 ft		
10/21/2013	POST	V.X-64	17:08:58	17:09:03	HSEA	50	250		1	0	None	SW-S			NONE	G	OC	0	1	0-3 ft		
10/21/2013	POST	V.X-64	17:12:15	17:12:17	HSEA	150	150		1			SW-S			NONE	G	OC	0	1	0-3 ft		
10/22/2013	PRE	B-3	9:04:44	9:04:56	HSEA	40	0	75	1	0	Away	SW-E	DI		NONE	G	OC	0	1	0-3 ft		Dove in reponse to a passing skiff
10/22/2013	PRE		9:07:11	9:07:12	HSEA	230	30	200	1			RE	SI		NONE	G	OC	0	2	0-3 ft		
10/22/2013	CON	B-3	9:17:26	9:17:35	HSEA	60	180	20	1	0	Away	RE			NONE	G	OC	0	1	0-3 ft		
10/22/2013	CON	B-3	9:20:46	9:21:00	HSEA	38	90	75	1	1	Parallel	SW-SE	SI		NONE	G	OC	0	1	0-3 ft		
10/22/2013	CON		9:23:23	9:23:43	HSEA	230	0	28	1			SW-W	SI		NONE	G	OC	0	2	0-3 ft		
10/22/2013	CON	B-3	9:28:48	9:29:00	HSEA	45	90	65	1	0	Away	UN			NONE	G	OC	0	1	0-3 ft		nose in the air-head tilted back as if resting, slowly floating North
10/22/2013	CON	B-3	9:32:38	9:32:42	HSEA	125	90	225	2		Parallel	SW-S			V	G	OC	0	2	0-3 ft		
10/22/2013	CON	A-3	10:31:43	10:31:54	HSEA	130	200	245	1			RE	SI		NONE	G	OC	0	2	0-3 ft		
10/22/2013	CON	B-3	10:38:39	10:38:49	HSEA	45	120	50	1	0	None	SL			NONE	G	OC	0	1	0-3 ft		Splash at the surface near bent 6. Possibly foraging

Date	Event Code	Pile	Start Time	End Time	Species	Dist. To animal (m)	Dir. To animal (deg)	Dist to pile (m)	Best num of animals	Num of juv	Relative motion	Behavior 1	Behavior 2	Behavior 3	Const Type	Visi-bility	Weather	Glare (%)	BSS	Wave ht	Swell Dir	Comments
10/22/2013	CON	A-3	10:41:46	10:41:58	HSEA	90	45	120	1	0	Away	RE			NONE	G	OC	0	1	0-3 ft		Floating South
10/22/2013	CON	A-3	11:17:03	11:17:05	HSEA	100	90	65	1	0	None	MI	RE		NONE	G	OC	0	2	0-3 ft		
10/22/2013	CON	A-3	11:23:46	11:24:06	HSEA	2	270	36	1	0	None	FO	DI		NONE	G	OC	0	2	0-3 ft		
10/22/2013	CON	A-3	11:29:25	11:29:27	HSEA	7	270	42	1	1	None	DI			NONE	G	OC	0	2	0-3 ft		
10/22/2013	CON		12:33:04	12:33:10	HSEA	10	190		1	0	None	LO	SI		NONE	G	OC	0	1	0-3 ft		
10/22/2013	CON		12:42:01	12:42:42	CASL	25	270		1	0		SW-S	DI	SW-S	NONE	G	OC	0	1	0-3 ft		
10/22/2013	CON		13:33:46	13:33:57	HSEA	50	270		1	0	Away	SW-S	SI		NONE	G	OC	0	1	0-3 ft		
10/22/2013	CON		14:47:23	14:47:33	HSEA	25	270		1	1	Toward	SW-N			NONE	G	OC	0	1	0-3 ft		
10/22/2013	CON		14:57:00	14:57:12	HSEA	45	340		1	0	Toward	RE			NONE	G	OC	0	1	0-3 ft		
10/22/2013	CON		15:13:44	15:14:05	HSEA	30	300		1	1	None	MI			NONE	G	OC	0	1	0-3 ft		
10/22/2013	CON		15:30:40	15:35:51	HSEA	35	340		1	0	None	RE			NONE	G	OC	0	1	0-3 ft		
10/22/2013	CON	NA	15:32:05	15:32:23	HSEA	28	240	34	1		Toward	MI	SI		NONE	E	S	0	1	0-3 ft		
10/22/2013	CON	NA	15:40:21	15:40:44	HSEA	12	195	16	1		Toward	MI	SI		NONE	E	S	0	1	0-3 ft		
10/22/2013	CON		15:45:58	15:46:21	HSEA	40	240		1	0	Toward	SW-N	RE		NONE	G	OC	0	1	0-3 ft		
10/22/2013	CON	NA	15:51:16	15:51:38	HSEA	16	240	18	1		Toward	MI	SI		NONE	E	S	0	1	0-3 ft		Stabbing batter pile
10/22/2013	CON	NA	16:02:21	16:02:43	HSEA	14	185	10	1		None	LO	SI		NONE	E	S	0	1	0-3 ft		
10/22/2013	CON		16:05:30	16:05:35	HSEA	45	330		2	0	Toward	RE			NONE	G	OC	0	1	0-3 ft		
10/22/2013	CON	NA	16:06:26	16:06:46	HSEA	25	270	10	2	1	Away	MI	DI		NONE	E	S	0	1	0-3 ft		Stabbing but pile not moving at time of sighting
10/22/2013	CON	VX-61	16:58:43	16:58:47	HSEA	50	330	15	1	0	Away	SW-SW			NONE	G	OC	0	1	0-3 ft		
10/22/2013	CON	VX-61	17:12:59	17:13:05	HSEA	55	320	18	1	0	Toward	SW-NE			NONE	G	OC	0	1	0-3 ft		
10/22/2013	CON	VX-61	17:15:04	17:15:12	HSEA	20	290	35	1	1	Toward	RE	SI		NONE	G	OC	0	1	0-3 ft		
10/22/2013	CON	VX-61	17:20:18	17:20:19	HSEA	14	45	30	1	0	None	DI			NONE	G	OC	0	1	0-3 ft		
10/22/2013	CON	VX-61	17:21:20	17:21:38	HSEA	28	230	21	1		Parallel	MI	SI		V	E	F	0	1	0-3 ft		
10/22/2013	CON	VX-61	17:25:19	17:25:20	HSEA	35	340	12	1	0	None	DI			V	G	OC	0	1	0-3 ft		
10/22/2013	POST	NA	17:42:03	17:42:10	HSEA	85	0	75	1		None	RE			NONE	E	F	0	1	0-3 ft		
10/22/2013	POST	NA	17:45:34	17:45:39	HSEA	7	180	6	1		Parallel	MI			NONE	E	F	0	1	0-3 ft		
10/22/2013	POST	VX-61	17:55:37	17:55:45	HSEA	60	280	55	1	0	Toward	SW-E			NONE	G	OC	0	1	0-3 ft		
10/22/2013	POST	NA	17:59:39	17:59:40	HSEA	35	160		1	0	None	DI			NONE	G	OC	0	1	0-3 ft		
10/23/2013	PRE		10:48:10	10:48:22	HSEA	30	110	30	1	0	None	RE			NONE	P	F	0	1	0-3 ft		nose tilted back

Date	Event Code	Pile	Start Time	End Time	Species	Dist. To animal (m)	Dir. To animal (deg)	Dist to pile (m)	Best num of animals	Num of juv	Relative motion	Behavior 1	Behavior 2	Behavior 3	Const Type	Visi-bility	Weather	Glare (%)	BSS	Wave ht	Swell Dir	Comments
10/23/2013	PRE		10:50:24	10:50:55	HSEA	30	80	60	1	0	None	RE			NONE	P	F	0	1	0-3 ft		
10/23/2013	PRE		10:53:24	10:53:35	HSEA	125	90	14	1	0	None	RE			NONE	P	F	0	1	0-3 ft		Head tilted back
10/23/2013	PRE	VX-61	10:54:19	10:55:14	HSEA	35	270	50	1	1	None	RE	DI		NONE	G	OC	0	1	0-3 ft		
10/23/2013	PRE	VX-61	10:56:16	10:56:48	HSEA	45	180	120	1	0	Away	MI	RE		NONE	G	OC	0	1	0-3 ft		
10/23/2013	PRE	VX-61	10:57:32	10:57:53	HSEA	15	200	60	1	0	Away	RE			NONE	G	OC	0	1	0-3 ft		
10/23/2013	CON		11:04:47	11:04:51	HSEA	130	90	30	1	0	None	RE	SI		NONE	P	F	0	1	0-3 ft		
10/23/2013	CON	VX-61	11:08:26	11:08:51	HSEA	30	290	18	1	0	Away	SW-SW	DI		NONE	G	OC	0	1	0-3 ft		
10/23/2013	CON	VX-61	11:12:56	11:13:08	HSEA	40	290	35	1	0	Away	SW-S			NONE	G	OC	0	1	0-3 ft		
10/23/2013	CON		11:19:19	11:19:21	HSEA	10	270	80	1	0	None	RE			NONE	P	F	0	1	0-3 ft		
10/23/2013	CON	VX-61	11:29:54	11:30:06	HSEA	30	270	33	1	1	None	RE			NONE	G	OC	0	1	0-3 ft		
10/23/2013	CON	VX-61	11:32:18	11:33:27	HSEA	10	80	100	1	0	None	MI			NONE	P	F	0	1	0-3 ft		
10/23/2013	CON	VX-61	11:34:43	11:34:44	HSEA	30	270	50	1	0	None	MI			NONE	P	F	0	1	0-3 ft		
10/23/2013	CON	VX-61	11:38:14	11:38:20	HSEA	70	0	50	1	0	Toward	SW-S			NONE	G	OC	0	1	0-3 ft		
10/23/2013	CON	VX-61	11:39:04	11:39:05	HSEA	100	90	50	1	0	None	SW-S			NONE	P	F	0	1	0-3 ft		
10/23/2013	CON	NA	11:39:29	11:39:38	HSEA	1	270	7	1		Away	RE	DI	SW-N	NONE	G	F	0	1	0-3 ft		
10/23/2013	CON	VX-61	11:44:55	11:45:04	HSEA	50	90	50	1	0	None	SW-S			NONE	P	F	0	1	0-3 ft		
10/23/2013	CON	NA	11:51:35	11:51:44	HSEA	55	340	48	1		Toward	SW-SW	DI		NONE	G	F	0	1	0-3 ft		
10/23/2013	CON	NA	11:53:04	11:53:15	HSEA	80	10	80	1		Toward	SW-S	DI		NONE	G	F	0	1	0-3 ft		
10/23/2013	CON	NA	12:02:31	12:02:43	HSEA	20	30	24	1		Parallel	FL	DI		NONE	G	F	0	1	0-3 ft		
10/23/2013	CON	NA	12:04:24	12:04:49	HSEA	62	0	60	1		Away	MI	DI		NONE	G	F	0	1	0-3 ft		
10/23/2013	CON	NA	12:05:40	12:05:52	HSEA	75	345	70	1		Away	MI	DI		NONE	G	F	0	1	0-3 ft		
10/23/2013	CON	VX-61	12:08:25	12:08:29	HSEA	10	300	22	1	1	Toward	RE	SI		NONE	G	OC	0	1	0-3 ft		
10/23/2013	CON	VX-61	12:14:05	12:14:18	HSEA	5	200	65	1	1	Away	MI			NONE	G	OC	0	1	0-3 ft		
10/23/2013	CON	NA	12:16:39	12:16:58	HSEA	30	270	24	1		Away	SW-W			NONE	G	F	0	1	0-3 ft		
10/23/2013	CON	NA	14:44:27	14:44:38	HSEA	34	260	22	1		None	MI	DI		NONE	E	S	0	1	0-3 ft		
10/23/2013	CON	NA	14:58:10	14:58:16	HSEA	25	200		1	0	Toward	RE	SI		NONE	G	OC	0	1	0-3 ft		
10/23/2013	CON	NA	15:02:19	15:02:27	HSEA	35	260	23	1		None	FL			NONE	E	S	0	1	0-3 ft		
10/23/2013	CON	NA	15:16:49	15:17:03	HSEA	30	270		1	0	Toward	SW-NE			NONE	G	OC	0	1	0-3 ft		

Date	Event Code	Pile	Start Time	End Time	Species	Dist. To animal (m)	Dir. To animal (deg)	Dist to pile (m)	Best num of animals	Num of juv	Relative motion	Behavior 1	Behavior 2	Behavior 3	Const Type	Visi-bility	Weather	Glare (%)	BSS	Wave ht	Swell Dir	Comments
10/23/2013	CON	NA	15:17:33	15:17:54	HSEA	23	265	15	1		Parallel	MI	RE		NONE	E	S	0	1	0-3 ft		
10/23/2013	CON		15:34:06	15:34:07	HSEA	30	90		1	0	None	DI			NONE	P	F	0	1	0-3 ft		
10/23/2013	CON	R-22	15:43:09	15:43:10	HSEA	5	0	35	1	1	None	RE	DI		NONE	G	OC	0	1	0-3 ft		
10/23/2013	CON	R-22	15:50:12	15:50:13	HSEA	15	90	60	1		None	DI			NONE	G	OC	0	1	0-3 ft		
10/23/2013	CON	NA	15:50:15	15:51:21	HSEA	32	260		1	0	Toward	SW-NW	RE	DI	NONE	G	OC	0	1	0-3 ft		
10/23/2013	CON	R-22	15:55:47	15:55:50	HSEA	20	0	90	1	0	None	MI			NONE	G	OC	0	1	0-3 ft		
10/23/2013	CON	R-22	16:04:38	16:10:20	HSEA	150	90	250	2	0	None	MI	FO	PL	NONE	G	OC	0	1	0-3 ft		courtship?
10/23/2013	CON	R-22	16:05:41	16:05:42	HSEA	20	80	70	1	0	None	MI			NONE	G	OC	0	1	0-3 ft		
10/23/2013	CON	R-22	16:09:04	16:09:06	HSEA	100	270	200	1	0	None	SW-S			NONE	G	OC	0	1	0-3 ft		
10/23/2013	CON	V-23	16:28:44	16:28:49	HSEA	45	320	40	1	0	None	RE	SI		NONE	G	OC	0	1	0-3 ft		
10/23/2013	CON	V-23	16:35:22	16:35:23	HSEA	220	135	300	1	0	Parallel	SW-N			I	G	OC	0	1	0-3 ft		
10/23/2013	CON	V-23	16:36:12	16:36:49	HSEA	10	180	15	1	1	Away	MI			NONE	G	OC	0	1	0-3 ft		
10/23/2013	CON	V-23	16:36:52	16:36:57	HSEA	15	270	50	1	0	Toward	SW-S			NONE	G	OC	0	1	0-3 ft		
10/23/2013	CON	V-23	16:45:04	16:45:59	HSEA	50	110	150	1	0	Parallel	SW-N			NONE	G	OC	0	1	0-3 ft		
10/23/2013	CON	V-23	16:54:23	16:54:24	HSEA	70	90	125	1	0	None	MI			NONE	G	OC	0	1	0-3 ft		
10/23/2013	CON	V-23	16:59:54	16:59:55	HSEA	25	30	100	1	1	None	DI			NONE	G	OC	0	1	0-3 ft		
10/23/2013	CON	V-23	17:02:15	17:02:16	HSEA	50	0	25	1	0	None	DI			NONE	G	OC	0	1	0-3 ft		
10/23/2013	CON	V-23	17:03:10	17:03:11	HSEA	20	30	50	1	0	None	DI			NONE	G	OC	0	1	0-3 ft		
10/23/2013	CON	V-23	17:05:31	17:05:32	HSEA	25	70	30	1	0	None	DI			NONE	G	OC	0	1	0-3 ft		
10/23/2013	CON	V-23	17:05:40	17:06:03	HSEA	150	135	70	1	0	None	MI			NONE	G	OC	0	1	0-3 ft		
10/23/2013	CON	NA	17:09:37	17:10:01	HSEA	30	180	21	1		Away	MI	DI	LO	NONE	E	S	10	1	0-3 ft		
10/23/2013	CON	B-4	17:36:33	17:36:36	HSEA	15	80	150	1	0	Parallel	SW-W	FO		NONE	G	OC	0	1	0-3 ft		
10/23/2013	CON	B-4	17:38:49	17:39:04	HSEA	115	0	25	1	0	Toward	SW-W			V	G	OC	0	1	0-3 ft		
10/23/2013	POST	B-4	17:50:02	17:50:56	HSEA	25	45	125	1	0	Away	SW-SE			NONE	G	OC	0	1	0-3 ft		
10/23/2013	POST	B-4	17:53:06	17:55:02	HSEA	330	45	280	1	0	Parallel	SW-S			NONE	G	OC	0	1	0-3 ft		
10/23/2013	POST	B-4	17:54:23	17:54:28	HSEA	50	45	140	1	1	Parallel	SW-N			NONE	G	OC	0	1	0-3 ft		
10/23/2013	POST		18:06:22	18:06:29	HSEA	60	180		1	0	None	DI			NONE	G	OC	0	1	0-3 ft		
10/24/2013	CON		12:54:16	12:54:32	HSEA	20	195	215	1			SW-SE			NONE	G	F	0	1	0-3 ft		observation from boat - large adult-distance measured to rig template
10/24/2013	CON		13:26:20	13:26:30	HSEA	120	95	170	1			LO	SI		NONE	G	F	0	1	0-3 ft		

Date	Event Code	Pile	Start Time	End Time	Species	Dist. To animal (m)	Dir. To animal (deg)	Dist to pile (m)	Best num of animals	Num of juv	Relative motion	Behavior 1	Behavior 2	Behavior 3	Const Type	Visi-bility	Weather	Glare (%)	BSS	Wave ht	Swell Dir	Comments
10/24/2013	CON		13:32:22	13:32:28	HSEA	120	120	210	1			SW-S	SI		NONE	G	F	0	1	0-3 ft		
10/24/2013	CON		14:15:40	14:15:47	HSEA	120	280	240	1	0	Away	SW-S	DI		NONE	G	F	0	1	0-3 ft		
10/24/2013	OTHR		14:52:52	14:52:53	CASL				90		None	HO	PL		OTHER	G	F	0	1	0-3 ft		Mammal count. 5 north package, 13 middle package, 15 south package, 57 WRA fence. Highest count this season.
10/24/2013	OTHR		14:52:59	14:53:00	STSL				3			HO			OTHER	G	F	0	1	0-3 ft		3 middle package [95 percent sure-SHJ], possibly 1 on south package
10/24/2013	CON		15:08:39	15:09:03	HSEA	130	26		1	0		SW-E	SW-W	DI	NONE	G	OC	0	1	0-3 ft		
10/24/2013	CON		15:16:29	15:16:55	HSEA	135	10		1	1		RE	SI		NONE	G	OC	0	1	0-3 ft		
10/24/2013	CON	B-4	15:43:14	15:43:21	HSEA	5	0	130	1	0		LO	SI		V	G	OC	0	1	0-3 ft		
10/24/2013	CON	B-4	15:53:50	15:54:12	HSEA	280	20	200	1	0	Away	SW-E	DI		NONE	G	OC	0	1	0-3 ft		
10/24/2013	CON	B-4	15:56:15	15:56:48	HSEA	130	0	25	1	0	Toward	SW-W	SI		NONE	G	OC	0	1	0-3 ft		
10/24/2013	CON	A-4	16:00:27	16:00:55	HSEA	48	110	24	1		Toward	FL	SI		NONE	E	OC	0	1	0-3 ft		
10/24/2013	CON	B-4	16:02:04	16:02:39	HSEA	300	308	290	1	0	Away	SW-S	RE	DI	NONE	G	OC	0	1	0-3 ft		
10/24/2013	CON	A-4	16:02:59	16:03:24	HSEA	46	110	21	1		Toward	FL	SI		NONE	E	OC	0	1	0-3 ft		
10/24/2013	CON	B-4	16:07:32	16:07:40	HSEA	130	0	10	1	0	Away	SW-E	DI		NONE	G	OC	0	1	0-3 ft		
10/24/2013	CON	A-4	16:08:02	16:08:07	HSEA	54	120	24	1		None	FL			NONE	E	OC	0	1	0-3 ft		
10/24/2013	CON	B-4	16:15:03	16:15:09	HSEA	155	0	50	1	0	Away	SW-E	DI		NONE	G	OC	0	1	0-3 ft		
10/24/2013	CON	A-4	16:15:23	16:15:43	HSEA	44	160	18	1		None	FL	SI		NONE	E	OC	0	1	0-3 ft		
10/24/2013	CON	B-4	16:19:32	16:20:06	HSEA	150	0	25	1	0	Away	SW-E	SI		NONE	G	OC	0	1	0-3 ft		
10/24/2013	CON	B-4	16:29:54	16:31:16	HSEA	200	306	200	1	0	None	RE	SI		NONE	G	OC	0	1	0-3 ft		
10/24/2013	CON	B-4	16:32:26	16:33:01	CASL	160	280	180	1	0	Toward	MI	RE	DI	NONE	G	OC	0	1	0-3 ft		
10/24/2013	CON	A-4	16:40:53	16:41:07	HSEA	20	18	110	1	0	None	LG	SW-N	SI	NONE	G	OC	0	1	0-3 ft		
10/24/2013	CON	A-4	16:44:25	16:45:49	HSEA	10	260	47	1	0	Toward	LO	SI		NONE	G	OC	0	1	0-3 ft		
10/24/2013	CON	A-4	16:46:13	16:46:53	HSEA	45	180	50	1	1	Toward	LO	SW-N	DI	NONE	G	OC	0	1	0-3 ft		RIGHT BEFORE VIBE AND SWIMMING STRAIGHT FOR PILE
10/24/2013	CON	A-4	16:47:19	16:47:28	HSEA	110	19	80	1	0	None	RE	SI		NONE	G	OC	0	1	0-3 ft		
10/24/2013	CON	A-4	16:56:54	16:57:06	HSEA	160	334	50	1	0	Toward	SW-E	DI		V	G	OC	0	1	0-3 ft		
10/24/2013	POST		17:05:03	17:05:34	HSEA	60	308		1	1	None	RE	DI		NONE	G	OC	0	1	0-3 ft		
10/24/2013	POST		17:07:18	17:07:36	HSEA	70	342		1	1	None	RE	SI		NONE	G	OC	0	1	0-3 ft		

Date	Event Code	Pile	Start Time	End Time	Species	Dist. To animal (m)	Dir. To animal (deg)	Dist to pile (m)	Best num of animals	Num of juv	Relative motion	Behavior 1	Behavior 2	Behavior 3	Const Type	Visi-bility	Weather	Glare (%)	BSS	Wave ht	Swell Dir	Comments
10/24/2013	POST		17:12:17	17:16:26	HSEA	190	96		1	0	None	RE	SI		NONE	G	OC	0	1	0-3 ft		
10/24/2013	POST		17:20:16	17:20:34	HSEA	35	260		1	0	Away	SW-S	DI		NONE	G	OC	0	1	0-3 ft		
10/24/2013	POST		17:22:45	17:22:03	HSEA	100	260		1	0		LO	MI	SI	NONE	G	OC	0	1	0-3 ft		
10/24/2013	POST		17:26:12	17:26:54	HSEA	150	190		1	0	Away	SW-S			NONE	G	OC	0	1	0-3 ft		
10/25/2013	PRE	NA	8:24:39	8:24:51	HSEA	25	150		2	0	None	LO	SI		NONE	G	OC	0	1	0-3 ft		At Marginal by boat before departure
10/25/2013	PRE	NA	8:35:51	8:36:40	HSEA	50	180		1	1	Toward	SW-N	DI		NONE	G	OC	0	1	0-3 ft		
10/25/2013	PRE	NA	8:41:54	8:42:02	HSEA	320	150		1	0	Away	SW-S	DI		NONE	G	OC	0	1	0-3 ft		
10/25/2013	PRE	NA	8:42:31	8:42:34	HSEA	57	140		1	1	Toward	SW-N	DI		NONE	G	OC	0	1	0-3 ft		Likely same animal as sighting 2
10/25/2013	CON	B-5	8:54:21	8:54:28	HSEA	270	200	390	1	0	None	LO	SI		NONE	G	OC	0	1	0-3 ft		
10/25/2013	CON	B-5	9:00:39	9:05:32	CASL	170	200	180	1	0	Away	TR-S			NONE	G	OC	0	1	0-3 ft		
10/25/2013	CON	B-5	9:08:56	9:09:00	HSEA	120	15	50	1	1	None	RE			NONE	G	OC	0	1	0-3 ft		
10/25/2013	CON	B-5	9:37:29	9:38:21	HSEA	10	100	157	1	0	Parallel	SW-N			NONE	G	OC	0	1	0-3 ft		
10/25/2013	CON	A-5	10:23:55	10:24:45	HSEA	158	110	290	1	0	Away	SW-S	DI		NONE	G	OC	0	1	0-3 ft		
10/25/2013	CON	A-5	10:34:02	10:34:12	HSEA	120	200	250	1	0	Away	SW-SE			V	G	OC	0	1	0-3 ft		
10/25/2013	CON	A-5	10:41:04	10:41:10	HSEA	53	120	35	1	0	Parallel	RE	SW-S		V	G	OC	0	1	0-3 ft		
10/25/2013	CON	A-5	10:44:56	10:45:02	HSEA	44	90	44	1		Away	SW-E			NONE	G	OC	0	1	0-3 ft		
10/25/2013	CON	A-5	10:50:42	10:50:49	HSEA	45	90	60	1	0	Away	SW-N	SI		V	G	OC	0	1	0-3 ft		Swimming near divers
10/25/2013	CON	A-5	10:59:48	11:35:03	HSEA	120	220	220	1	0	Away	LO	SI	SW-S	NONE	G	OC	0	1	0-3 ft		dark grey mottled head. Light dorsal. Surfaced every 2 to 4 minutes. Other behaviors SW-S.
10/25/2013	CON	A-5	11:15:13	11:24:29	HSEA	20	270	110	1	0	Away	LO	SI	RE	NONE	G	OC	0	1	0-3 ft		Verylight mottled head and dorsal, other behaviors SW-SW
10/25/2013	CON	A-5	11:25:04	11:25:12	HSEA	75	200	180	1	1	Away	SW-S			NONE	G	OC	0	1	0-3 ft		
10/25/2013	CON	A-5	11:29:07	11:29:38	HSEA	25	120	140	1	0	Away	SW-SE			NONE	G	OC	0	1	0-3 ft		
10/25/2013	CON	B-6	11:38:35	11:39:07	HSEA	50	270	140	1	0	None	LO	SI		NONE	G	OC	0	1	0-3 ft		
10/25/2013	CON	B-6	11:40:08	11:40:34	HSEA	30	180	10	1	0	None	RE	UN		NONE	G	OC	0	1	0-3 ft		Sticking nose in the air, as if resting
10/25/2013	CON	B-6	11:42:20	11:43:12	HSEA	325	120	450	1	0	Toward	SW-NE			NONE	G	OC	0	1	0-3 ft		
10/25/2013	CON	B-6	11:46:28	11:47:13	HSEA	140	0	50	1	0	Toward	RE	LO	SI	NONE	G	OC	0	1	0-3 ft		
10/25/2013	CON	B-6	11:47:57	11:48:00	HSEA	100	290	70	1	0	Toward	SW-N			NONE	G	OC	0	1	0-3 ft		
10/25/2013	CON	B-6	11:49:58	11:50:31	HSEA	100	200	90	1	0	None	RE	DI		NONE	G	OC	0	1	0-3 ft		
10/25/2013	CON	B-6	11:53:33	11:54:00	HSEA	100	200	150	1	0	Away	SW-SE			NONE	G	OC	0	1	0-3 ft		

Date	Event Code	Pile	Start Time	End Time	Species	Dist. To animal (m)	Dir. To animal (deg)	Dist to pile (m)	Best num of animals	Num of juv	Relative motion	Behavior 1	Behavior 2	Behavior 3	Const Type	Visi-bility	Weather	Glare (%)	BSS	Wave ht	Swell Dir	Comments
10/25/2013	CON	B-6	11:55:40	23:55:55	HSEA	50	270	135	1		Away	SW-S	LO	DI	NONE	G	OC	0	1	0-3 ft		
10/25/2013	CON	B-6	12:02:27	12:03:36	HSEA	200	100	300	1	0	Parallel	SW-N			V	G	OC	0	1	0-3 ft		
10/25/2013	CON	B-6	12:03:49	12:05:20	HSEA	190	90	180	1	0	Away	SW-N			V	G	OC	0	1	0-3 ft		
10/25/2013	CON	B-6	12:05:29	12:05:33	HSEA	135	0	40	1	1	Toward	SW-E			V	G	OC	0	1	0-3 ft		
10/25/2013	CON	B-6	12:16:06	12:16:37	HSEA	30	90	30	1	0	None	RE			NONE	G	OC	0	1	0-3 ft		NOSE UP IN THE AIR
10/25/2013	CON	A-6	13:12:01	13:12:09	HSEA	110	5	50	1	0	Toward	SW-W			NONE	G	OC	0	1	0-3 ft		TIME IN BETWEEN VIBE OF A-6
10/25/2013	CON	A-6	13:23:52	13:23:56	HSEA	130	5	50	1	0	Toward	SW-E			V	G	OC	0	1	0-3 ft		TIME
10/25/2013	CON	A-6	13:27:12	13:27:21	HSEA	20	90	38	1	0	Toward	SW-S	DI		V	G	OC	0	1	0-3 ft		Dove due to noise of hammer
10/25/2013	CON	A-6	13:35:10	13:36:01	HSEA	39	120	40	1	0	Parallel	SW-S			V	G	OC	0	0	0-3 ft		
10/25/2013	CON	A-6	13:42:19	13:42:25	HSEA	40	80	60	1	0	Away	SW-NE	SI		V	G	OC	0	0	0-3 ft		Sinking under dive boat
10/25/2013	CON	A-6	13:51:41	13:51:45	HSEA	140	20	160	1	0	Toward	DI			V	G	OC	0	1	0-3 ft		
10/25/2013	CON	A-6	13:52:15	13:52:34	HSEA	100	120	95	1	0	None	RE	DI		V	G	OC	0	0	0-3 ft		
10/25/2013	CON	A-6	13:56:20	13:56:53	HSEA	40	70	90	1	0	Toward	SL	UN	RE	V	G	OC	0	0	0-3 ft		Splashing and slapping the water around a pile E of piles currently driven (around bent 13), then floated on surface
10/25/2013	CON	A-6	14:08:10	14:10:41	HSEA	125	10	60	1	0	None	RE	SI		NONE	G	OC	0	1	0-3 ft		VERY LIGHT ALL OVER, HAVE NOT OBSERVED THIS
10/25/2013	CON	A-6	14:21:18	14:21:51	HSEA	375	0	275	1	0	None	LO	SI		NONE	G	OC	0	1	0-3 ft		
10/25/2013	CON	A-6	14:23:37	14:24:14	HSEA	30	280	130	1	0	Away	SW-S			NONE	G	OC	0	1	0-3 ft		
10/25/2013	CON	B-7	14:51:12	14:52:51	HSEA	155	0	60	1	0	Away	RE	SW-E	SW-S	NONE	G	OC	0	1	0-3 ft		
10/25/2013	CON	B-7	15:01:17	15:01:21	HSEA	29	180	32	1	0	Away	SW-E			V	G	OC	0	1	0-3 ft		
10/25/2013	CON	B-7	15:07:55	15:08:01	HSEA	163	270	166	1	0	Away	SW-N			NONE	G	OC	0	1	0-3 ft		
10/25/2013	CON	B-7	15:10:05	15:10:13	HSEA	300	200	420	1	0	None	LO	SI		NONE	G	OC	0	1	0-3 ft		
10/25/2013	CON	TT-1	15:51:44	15:53:48	HSEA	30	90	25	1	1	Parallel	FO			V	G	OC	0	0	0-3 ft		
10/25/2013	CON	B-8	16:35:23	16:35:39	HSEA	30	290	120	1	0	Parallel	SW-NW	SI		NONE	G	OC	0	1	0-3 ft		
10/25/2013	CON	B-8	16:37:49	16:37:58	HSEA	102	0	60	1	0	Away	RE			NONE	G	OC	0	1	0-3 ft		
10/25/2013	CON	B-8	16:54:02	16:55:07	HSEA	100	0	170	1	1	None	RE			V	G	OC	0	0	0-3 ft		
10/25/2013	CON	B-8	16:55:59	16:56:59	HSEA	100	0	170	1	1	None	RE			V	G	OC	0	0	0-3 ft		
10/25/2013	CON	B-8	16:56:24	16:56:32	HSEA	48	180	50	1	0	Away	SW-E			V	G	OC	15	1	0-3 ft		
10/25/2013	POST	B-8	17:03:03	17:03:49	HSEA	115	290	20	1	0	Toward	SW-W			NONE	G	OC	0	1	0-3 ft		
10/25/2013	POST	B-8	17:25:34	17:25:48	HSEA	130	10	120	1	1	None	RE			NONE	G	OC	0	1	0-3 ft		
10/26/2013	PRE	NA	8:29:35	8:29:45	HSEA	45	220	65	1	1	None	RE	SI		NONE	G	OC	15	1	0-3 ft		
10/26/2013	PRE		8:31:56	8:32:15	HSEA	115	17		1	0	None	SW-S	DI		NONE	G	OC	0	1	0-3 ft		
10/26/2013	PRE		8:35:49	8:36:04	HSEA	120	37		1	0	None	RE			NONE	G	OC	0	1	0-3 ft		
10/26/2013	CON	NA	8:47:00	8:47:09	HSEA	60	145	60	1	1	None	RE	DI		NONE	G	OC	15	1	0-3 ft		
10/26/2013	CON	A-8	8:47:48	8:48:04	HSEA	130	12	50	1	0	None	RE	SI		NONE	G	OC	0	1	0-3 ft		

Date	Event Code	Pile	Start Time	End Time	Species	Dist. To animal (m)	Dir. To animal (deg)	Dist to pile (m)	Best num of animals	Num of juv	Relative motion	Behavior 1	Behavior 2	Behavior 3	Const Type	Visi-bility	Weather	Glare (%)	BSS	Wave ht	Swell Dir	Comments
10/26/2013	CON	A-8	8:50:47	8:51:07	HSEA	165	349	60	1	0	Away	SW-S	SI		NONE	G	OC	0	1	0-3 ft		
10/26/2013	CON	A-8	8:59:57	9:00:08	HSEA	10	288	130	1	0	None	LO	SI		NONE	G	OC	0	1	0-3 ft		
10/26/2013	CON	NA	9:04:48	9:06:33	CASL	45	195	110	1	0	Away	TR-S			NONE	G	OC	15	1	0-3 ft		
10/26/2013	CON	A-8	9:06:49	9:07:06	HSEA	60	12	105	1	0		SW-W	DI		NONE	G	OC	0	1	0-3 ft		
10/26/2013	CON	A-8	9:14:00	9:14:16	HSEA	100	350	90	1	0	Away	SW-S	DI		V	G	OC	0	1	0-3 ft		
10/26/2013	CON	NA	9:26:47	9:28:11	HSEA	85	135	65	1	0	None	RE	SI		NONE	G	OC	15	1	0-3 ft		
10/26/2013	CON	NA	9:37:29	9:37:38	HSEA	65	155	65	1	0	None	LO	DI		NONE	G	OC	15	1	0-3 ft		
10/26/2013	CON	NA	9:42:29	9:42:53	HSEA	120	145	150	1	0	None	SW-S	DI		NONE	G	OC	15	1	0-3 ft		
10/26/2013	CON	A-8	9:54:36	9:54:46	HSEA	140	33	180	1	1	Parallel	SW-S			NONE	G	OC	0	1	0-3 ft		
10/26/2013	CON	A-8	10:00:25	10:00:44	HSEA	15	322	160	1	1	None	RE	SI		NONE	G	OC	0	1	0-3 ft		
10/26/2013	CON	NA	10:00:50	10:01:11	HSEA	20	145	15	1	0	None	LO	RE	DI	NONE	G	OC	15	1	0-3 ft		
10/26/2013	CON	A-8	10:04:37	10:04:46	HSEA	109	12	65	1	1	Away	SW-E	DI		NONE	G	OC	0	1	0-3 ft		
10/26/2013	CON	NA	10:05:44	10:05:54	HSEA	65	165	45	1	0	None	LO	DI		NONE	G	OC	15	1	0-3 ft		
10/26/2013	CON	A-8	10:11:07	10:11:13	HSEA	180	124	350	1	0	None	LO	SI		NONE	G	OC	0	1	0-3 ft		
10/26/2013	CON	A-8	10:14:14	10:14:26	HSEA	180	124	350	1	0	None	RE	SI		NONE	G	OC	0	1	0-3 ft		
10/26/2013	CON	A-8	10:24:03	10:24:27	HSEA	15	304	200	1	1	None	RE	SI		NONE	G	OC	0	1	0-3 ft		
10/26/2013	CON	A-8	10:26:30	10:26:48	HSEA	80	250	280	1	1	Away	SW-S	DI		NONE	G	S	0	1	0-3 ft		
10/26/2013	CON	NA	10:36:15	10:36:32	HSEA	34	135	15	1	0	Toward	SW-W	DI		NONE	G	OC	15	1	0-3 ft		
10/26/2013	CON	B-9	10:42:12	10:54:52	HSEA	160	340	10	1	0	Toward	RE	SI		NONE	G	S	0	1	0-3 ft		
10/26/2013	CON	B-9	10:53:54	10:53:58	HSEA	5	200	175	1	0	None	LO	SI		NONE	G	S	0	1	0-3 ft		
10/26/2013	CON	B-9	11:05:09	11:05:26	HSEA	55	90	110	1	0	Parallel	SW-W	DI		V	G	OC	0	1	0-3 ft		
10/26/2013	CON	B-9	11:05:41	11:05:50	HSEA	160	20	65	1	0	None	RE	SI		V	G	S	0	1	0-3 ft		
10/26/2013	CON	NA	11:07:51	11:08:06	HSEA	65	135	65	1	0	None	RE	SI		NONE	G	OC	15	1	0-3 ft		
10/26/2013	CON	A-8	11:15:21	11:15:31	HSEA	15	90	25	1	0	Parallel	LO	SW-N		NONE	G	OC	0	1	0-3 ft		
10/26/2013	CON	A-8	11:17:26	11:17:38	HSEA	60	140	45	1	0	None	RE	LO	SI	NONE	G	OC	0	1	0-3 ft		
10/26/2013	CON	B-9	11:25:32	11:25:36	HSEA	130	38	140	1	0	Toward	SW-W	DI		NONE	G	S	0	1	0-3 ft		8
10/26/2013	CON	B-9	11:31:32	11:31:40	HSEA	50	90	180	1	0	None	RE	SI		NONE	G	S	0	1	0-3 ft		
10/26/2013	CON	B-9	11:32:24	11:32:30	HSEA	50	90	180	1	0	None	LO	SI		NONE	G	S	0	1	0-3 ft		
10/26/2013	CON	A-8	11:39:55	11:40:12	HSEA	10	180	40	1	1	Parallel	SW-NW	DI		NONE	G	S	0	1	0-3 ft		
10/26/2013	CON	A-8	11:43:25	11:43:30	HSEA	35	100	45	1	0	None	RE	UN		NONE	G	S	0	1	0-3 ft		Nose in the air as if resting

Date	Event Code	Pile	Start Time	End Time	Species	Dist. To animal (m)	Dir. To animal (deg)	Dist to pile (m)	Best num of animals	Num of juv	Relative motion	Behavior 1	Behavior 2	Behavior 3	Const Type	Visi-bility	Weather	Glare (%)	BSS	Wave ht	Swell Dir	Comments
10/26/2013	CON	B-9	11:45:40	11:45:52	HSEA	56	225	56	1	1	None	RE	DI		NONE	G	S	15	1	0-3 ft		KAD sighting #5
10/26/2013	CON	A-9	11:46:30	11:46:50	HSEA	30	0	140	1	0	Toward	TR-N	MI	DI	NONE	G	S	5	1	0-3 ft		
10/26/2013	CON	B-9	11:49:23	11:49:47	HSEA	70	180	72	1	0	None	MI	SI		V	G	S	15	1	0-3 ft		
10/26/2013	CON	A-9	11:49:58	11:50:22	HSEA	130	340	60	1	0	Away	SW-SW	DI		V	G	S	5	1	0-3 ft		
10/26/2013	CON	A-9	12:00:45	12:00:51	HSEA	10	0	150	1	0	None	LO	SI		NONE	G	S	5	1	0-3 ft		
10/26/2013	PRE	NA	16:01:26	16:01:33	HSEA	40	180	65	1	1	None	LO	SI		NONE	G	S	15	1	0-3 ft		
10/26/2013	PRE	NA	16:05:16	16:05:20	HSEA	30	190	55	1	1	None	MI			NONE	G	S	15	1	0-3 ft		
10/26/2013	PRE	NA	16:09:53	16:10:10	HSEA	45	195	65	1	1	None	MI			NONE	G	S	35	1	0-3 ft		
10/26/2013	CON		16:48:23	16:48:28	HSEA	30	280	50	1	0	None	RE	SI		NONE	G	S	5	1	0-3 ft		
10/26/2013	CON	NA	16:53:44	16:53:54	HSEA	50	180	45	1	0	None	RE			NONE	G	S	0	1	0-3 ft		
10/26/2013	CON		16:54:31	16:54:38	HSEA	35	280	50	1	0	None	RE	SI		NONE	G	S	5	1	0-3 ft		
10/26/2013	CON	NA	16:55:51	16:56:02	HSEA	40	190	30	1	0	None	RE	SI		NONE	G	S	0	1	0-3 ft		
10/26/2013	CON	B-10	16:55:54	16:56:29	HSEA	55	90	65	1	0	None	RE	DI		NONE	G	S	35	1	0-3 ft		
10/26/2013	CON	NA	16:58:22	16:58:43	HSEA	50	160	50	1	0	Away	SW-E			NONE	G	S	0	1	0-3 ft		
10/26/2013	CON	NA	17:00:53	17:01:06	HSEA	56	180	40	1	0	None	RE			NONE	G	S	0	1	0-3 ft		
10/26/2013	CON	NA	17:01:20	17:01:24	HSEA	50	290	65	1	0	None	LO	SI		NONE	G	S	0	1	0-3 ft		
10/26/2013	CON	B-10	17:02:34	17:02:46	HSEA	40	328	10	1	0	Toward	SW-NE	DI		NONE	G	S	5	1	0-3 ft		
10/26/2013	CON	NA	17:03:39	17:03:53	HSEA	25	200	35	1	0	Toward	LO	SI		NONE	G	S	0	1	0-3 ft		
10/26/2013	CON	B-10	17:09:33	17:09:36	HSEA	95	100	85	1	1	Toward	SW-W	DI		V	G	OC	35	1	0-3 ft		
10/26/2013	CON	B-10	17:12:28	17:12:43	HSEA	35	150	40	1	0	Parallel	RE			V	G	S	0	1	0-3 ft		
10/26/2013	CON	B-10	17:13:26	17:13:51	HSEA	50	254	90	1	0	Parallel	SW-SE	DI		V	G	S	5	1	0-3 ft		KAD's sighting #6
10/26/2013	CON	B-10	17:14:50	17:14:57	HSEA	35	90	35	1	1	Toward	SW-W	DI		V	G	OC	35	1	0-3 ft		
10/29/2013	CON	NA	10:58:45	10:59:03	HSEA	50	330	30	1	0	Away	SW-NE			NONE	G	S	0	1	0-3 ft		
10/29/2013	CON	A-10	12:36:22	12:36:31	HSEA	250	140	240	1	0	Parallel	SW-N	DI		V	E	S	35	1	0-3 ft		
10/29/2013	CON	A-10	12:41:10	12:41:21	CASL	35	350	50	1	0	Toward	TR-E			NONE	G	S	0	1	0-3 ft		
10/29/2013	CON	NA	12:45:38	12:45:56	HSEA	65	125	55	1	1	None	RE	SI		NONE	E	S	0	0	0-3 ft		
10/29/2013	CON	NA	12:50:15	12:50:20	HSEA	38	100	35	1	1	None	RE	DI		NONE	E	S	0	0	0-3 ft		
10/29/2013	CON	NA	12:54:38	12:54:40	HSEA	50	220	50	1	1	Parallel	SW-N	SI		NONE	E	S	0	0	0-3 ft		
10/29/2013	CON	NA	12:57:15	12:58:39	HSEA	70	15	80	1	0	None	RE			NONE	E	S	0	0	0-3 ft		
10/29/2013	CON	B-11	13:18:55	13:19:07	HSEA	150	345	160	1	0	Parallel	MI			NONE	G	S	0	1	0-3 ft		
10/29/2013	CON	NA	13:20:53	13:21:07	HSEA	35	115	43	1	1	None	RE	MI	SI	NONE	E	S	0	0	0-3 ft		
10/29/2013	CON	B-11	13:22:19	13:22:45	HSEA	145	140	170	1	0	Away	SW-S	SI		NONE	G	S	0	1	0-3 ft		

Date	Event Code	Pile	Start Time	End Time	Species	Dist. To animal (m)	Dir. To animal (deg)	Dist to pile (m)	Best num of animals	Num of juv	Relative motion	Behavior 1	Behavior 2	Behavior 3	Const Type	Visi-bility	Weather	Glare (%)	BSS	Wave ht	Swell Dir	Comments
10/29/2013	CON	B-11	13:29:08	13:29:16	HSEA	103	90	45	1	0	Away	SW-S			V	G	S	0	1	0-3 ft		
10/29/2013	CON	A-11	14:16:11	14:16:17	HSEA	50	120	40	1	1	None	RE			NONE	E	S	35	1	0-3 ft		
10/29/2013	CON	A-11	14:28:52	14:29:04	HSEA	225	160	215	1	0	Parallel	SW-S			V	E	S	35	1	0-3 ft		
10/29/2013	CON	B-11	14:44:09	14:45:30	HSEA	140	130	110	1	0	Away	SW-S	RE	SI	V	G	S	0	1	0-3 ft		
10/29/2013	CON	B-11	14:49:55	14:50:01	HSEA	145	130	120	1	0	None	FL			NONE	G	S	0	1	0-3 ft		
10/29/2013	CON	B-11	15:51:40	15:51:53	HSEA	10	60	130	1	1	Away	SW-SE			NONE	G	S	0	1	0-3 ft		
10/29/2013	CON	A-12	16:26:16	16:26:29	HSEA	55	45	67	1	1	Parallel	SW-S			V	E	S	0	0	0-3 ft		
10/29/2013	CON	A-12	16:28:32	16:28:43	HSEA	55	35	71	1	1	None	MI			V	E	S	0	0	0-3 ft		
10/29/2013	CON	B-13	17:28:07	17:28:10	HSEA	72	147	55	1	1	Parallel	SW-N			V	E	S	0	0	0-3 ft		
10/29/2013	CON	B-13	17:28:35	17:28:39	HSEA	90	170	80	1	0	Parallel	SW-E			V	E	S	15	1	0-3 ft		
10/29/2013	CON	B-13	17:34:31	17:34:47	HSEA	66	145	58	1	1	Parallel	SW-N	DI		NONE	E	S	0	0	0-3 ft		
10/29/2013	CON	B-13	17:35:46	17:35:58	HSEA	66	137	68	1	1	None	MI			NONE	E	S	0	0	0-3 ft		
10/29/2013	POST	NA	17:57:08	17:57:25	HSEA	15	180	110	1	1	None	RE			NONE	G	S	0	1	0-3 ft		gps dead
10/29/2013	POST	NA	18:01:06	18:01:09	HSEA	20	170	120	1	1	None	RE	SI		NONE	G	S	0	1	0-3 ft		gps dead
10/29/2013	CON	NA	18:07:09	18:07:14	HSEA	20	180	410	2	0	Toward	SW-N			NONE	G	S	0	1	0-3 ft		Docked on marginal gps dead
10/30/2013	PRE	NA	8:41:14	8:41:35	HSEA	120	130	60	1	0	Away	SW-S			NONE	G	S	0	1	0-3 ft		
10/30/2013	CON	NA	9:03:30	9:04:03	HSEA	110	120	170	1	0	Toward	SW-N			NONE	G	S	0	1	0-3 ft		
10/30/2013	CON	NA	9:08:48	9:09:03	HSEA	120	120	130	1	0	None	RE	SI		NONE	G	S	0	1	0-3 ft		
10/30/2013	CON	NA	9:11:55	9:12:11	HSEA	90	90	40	1	1	None	RE			NONE	G	S	0	1	0-3 ft		
10/30/2013	CON	NA	9:13:57	9:14:34	HSEA	100	90	35	1	1	Away	SW-S	RE		NONE	G	S	0	1	0-3 ft		
10/30/2013	CON	NA	9:30:47	9:30:53	HSEA	15	90	55	1	0	Away	SW-S			NONE	G	S	0	1	0-3 ft		
10/30/2013	CON	NA	9:32:02	9:32:21	HSEA	150	160	180	1	0	Away	SW-S			NONE	G	S	0	1	0-3 ft		
10/30/2013	CON	NA	9:43:20	9:43:37	HSEA	35	300	95	1	0	None	LO	SI		NONE	G	S	0	1	0-3 ft		
10/30/2013	CON	NA	9:48:11	9:49:49	CASL	15	45		1	0	Parallel	TR-S			NONE	G	S	0	1	0-3 ft		
10/30/2013	CON	NA	10:09:37	10:10:08	HSEA	340	110		1	0	Parallel	SW-S	DI		NONE	G	S	0	1	0-3 ft		
10/30/2013	CON	NA	10:20:13	10:20:37	HSEA	100	45		1	0	Toward	SW-N			NONE	G	S	0	1	0-3 ft		
10/30/2013	CON	NA	10:23:25	10:23:55	HSEA	120	150		1		Away	SW-S	DI		NONE	G	S	0	1	0-3 ft		
10/30/2013	CON	NA	10:25:02	10:26:56	HSEA	340	140		2	0	None	MI	DI		NONE	G	S	0	1	0-3 ft		
10/30/2013	CON	NA	10:57:20	10:58:47	HSEA	55	180	35	1	0	Parallel	SW-W			NONE	G	S	0	1	0-3 ft		
10/30/2013	CON	A-13	11:10:25	11:11:36	HSEA	100	90	50	1	0	Away	SW-S	DI		NONE	G	S	0	1	0-3 ft		
10/30/2013	CON	A-13	11:34:16	11:34:35	HSEA	340	140	340	1	0	Parallel	SW-S	DI		V	G	S	0	1	0-3 ft		
10/30/2013	CON	A-13	11:41:53	11:42:00	HSEA	75	45	100	1	0	None	MI			V	G	S	10	1	0-3 ft		
10/30/2013	CON	A-13	11:51:24	11:51:31	HSEA	90	340	110	1	0	Parallel	SW-E			V	G	S	10	1	0-3 ft		
10/30/2013	CON	A-13	11:55:34	11:55:51	HSEA	400	160	400	1	0	None	RE	DI		V	G	S	0	1	0-3 ft		

Date	Event Code	Pile	Start Time	End Time	Species	Dist. To animal (m)	Dir. To animal (deg)	Dist to pile (m)	Best num of animals	Num of juv	Relative motion	Behavior 1	Behavior 2	Behavior 3	Const Type	Visi-bility	Weather	Glare (%)	BSS	Wave ht	Swell Dir	Comments
10/30/2013	CON	A-13	11:56:50	11:56:52	HSEA	200	180	310	1	0	Parallel	SW-W			V	G	S	0	1	0-3 ft		
10/30/2013	CON	A-13	12:02:08	12:02:24	HSEA	50	350	150	1	0	Away	SW-SW	DI		NONE	G	S	0	1	0-3 ft		
10/30/2013	CON	A-13	12:03:38	12:03:54	HSEA	400	160	400	1	0	Parallel	SW-S	DI		NONE	G	S	0	1	0-3 ft		
10/30/2013	CON	A-13	12:04:59	12:22:37	CASL	400	180	500	1	0	None	RE	MI	UN	V	G	S	0	1	0-3 ft		FINNING TO WARM UP
10/30/2013	CON	A-13	12:05:19	12:05:21	HSEA	200	180	300	1	0	Parallel	SW-E			V	G	S	0	1	0-3 ft		
10/30/2013	CON	A-13	12:06:53	12:07:02	HSEA	53	70	65	1	1	None	RE	DI		V	G	S	10	1	0-3 ft		
10/30/2013	CON	NA	13:10:00	13:10:43	HSEA	350	120		1	0	Parallel	SW-S	DI		NONE	G	S	0	1	0-3 ft		
10/30/2013	CON	B-13	13:23:41	13:23:56	HSEA	75	150	70	1	0	Parallel	SW-N			NONE	G	S	10	1	0-3 ft		
10/30/2013	CON	NA	13:25:11	13:25:36	HSEA	100	90	56	1	0	Toward	SW-N	DI		NONE	G	S	0	1	0-3 ft		
10/30/2013	CON	B-13	13:28:34	13:28:44	HSEA	30	100	40	1	0	Parallel	SW-S	DI		NONE	G	S	10	1	0-3 ft		
10/30/2013	CON	B-13	13:29:45	13:29:58	HSEA	40	130	45	1	0	Parallel	RE			NONE	G	S	10	1	0-3 ft		
10/30/2013	CON	B-14	13:33:55	13:34:03	HSEA	25	135	18	1		Parallel	SW-N	SI		NONE	E	OC	0	1	0-3 ft		
10/30/2013	CON	B-13	13:49:28	13:49:35	HSEA	50	140	30	1	0	Parallel	SW-S			NONE	G	S	10	1	0-3 ft		
10/30/2013	CON	B-14	13:52:31	13:53:01	HSEA	40	90	50	1	1	None	SW-SE			NONE	G	S	10	1	0-3 ft		
10/30/2013	CON	B-14	14:24:26	14:25:00	HSEA	100	0	150	1	0	Toward	SW-SE	DI		V	G	S	0	1	0-3 ft		
10/30/2013	CON	B-14	14:34:39	14:34:54	HSEA	37	155	30	1		Toward	SW-NW	SI		V	E	OC	0	1	0-3 ft		
10/30/2013	CON	B-14	14:35:13	14:35:31	HSEA	150	80	50	1	0	Toward	SW-NW	DI		V	G	S	0	1	0-3 ft		
10/30/2013	CON	B-14	14:36:11	14:36:27	HSEA	14	100	17	1		Toward	SW-NW	SI		V	E	OC	0	1	0-3 ft		
10/30/2013	CON	NA	14:45:31	14:45:46	HSEA	340	140	340	1	0	Parallel	SW-N	DI		NONE	G	S	0	1	0-3 ft		
10/30/2013	CON	NA	14:50:42	14:51:06	HSEA	200	90	100	1	1	None	MI			NONE	G	S	0	1	0-3 ft		
10/30/2013	CON	NA	14:55:06	14:55:06	HSEA	120	110		1	0	None	DI			NONE	G	S	0	1	0-3 ft		
10/30/2013	CON	A-14	15:28:58	15:29:04	HSEA	61	150	55	1		Parallel	MI	SI		V	E	OC	0	1	0-3 ft		
10/30/2013	CON	B-14	16:39:41	16:39:47	HSEA	150			1	0	Toward	SW-NW			NONE	G	S	10	1	0-3 ft		
10/30/2013	CON	B-14	16:40:50	16:41:06	HSEA	45	150	50	1	0	Toward	SW-N			NONE	G	OC	0	1	0-3 ft		
10/30/2013	CON	NA	16:42:49	16:42:56	HSEA	100	90		1	1	Toward	SW-NW			NONE	G	S	0	1	0-3 ft		
10/30/2013	CON	NA	16:44:18	16:44:42	HSEA	120	90		1	1	Toward	SW-N			NONE	G	S	0	1	0-3 ft		
10/30/2013	CON	B-14	16:48:39	16:48:52	HSEA	60	170	75	1	0	Away	SW-S			NONE	G	OC	0	1	0-3 ft		
10/30/2013	CON	B-14	16:51:29	16:51:42	HSEA	65	120	40	1	0	Parallel	SW-N	DI		NONE	G	OC	0	1	0-3 ft		
10/30/2013	CON	B-14	16:52:02	16:52:31	HSEA	30	140	20	1	0	Away	RE	DI		NONE	G	OC	0	1	0-3 ft		
10/30/2013	CON	NA	16:53:09	16:53:26	HSEA	100	90		1	1	Toward	SW-N	DI		NONE	G	S	0	1	0-3 ft		
10/30/2013	CON	NA	16:55:08	16:56:02	HSEA	100	70	10	2	2	Toward	SW-N	DI		NONE	G	S	0	1	0-3 ft		
10/30/2013	CON	B-14	16:55:45	16:55:56	HSEA	70	150	75	1	0	Parallel	SW-W			NONE	G	OC	0	1	0-3 ft		
10/30/2013	CON	NA	16:58:06	16:58:15	HSEA	120	90	60	1	1	None	RE	DI		NONE	G	S	0	1	0-3 ft		

Date	Event Code	Pile	Start Time	End Time	Species	Dist. To animal (m)	Dir. To animal (deg)	Dist to pile (m)	Best num of animals	Num of juv	Relative motion	Behavior 1	Behavior 2	Behavior 3	Const Type	Visi-bility	Weather	Glare (%)	BSS	Wave ht	Swell Dir	Comments
10/30/2013	CON	NA	16:59:50	16:59:59	HSEA	110	100	80	2	2	None	MI	DI		NONE	G	S	0	1	0-3 ft		
10/30/2013	CON	B-14	17:00:20	17:01:04	HSEA	25	110	20	1	0	Parallel	MI	DI		NONE	G	OC	0	1	0-3 ft		
10/30/2013	CON	NA	17:04:09	17:06:12	HSEA	120	100	100	2	2	Away	SW-S			NONE	G	S	0	1	0-3 ft		
10/30/2013	CON	NA	17:06:46	17:06:57	HSEA	100	80	40	1	1	None	RE	DI		NONE	G	S	0	1	0-3 ft		
10/30/2013	CON	NA	17:08:46	17:09:51	HSEA	100	80	40	1	0	Away	MI	DI		NONE	G	S	0	1	0-3 ft		
10/30/2013	CON	A-15	17:20:36	17:20:44	HSEA	35	70	60	1	0	None	LO	SI		V	G	OC	0	1	0-3 ft		
10/30/2013	CON	A-15	17:20:57	17:23:04	HSEA	150	90	100	1	0	None	RE	SI		V	G	S	0	1	0-3 ft		
10/30/2013	CON	A-15	17:21:44	17:21:48	HSEA	45	90	55	1	0	Toward	SW-W	DI		V	G	OC	0	1	0-3 ft		
10/30/2013	CON	A-15	17:24:55	17:25:00	HSEA	84	135	80	1		Toward	SW-NW	SI		V	E	OC	0	0	0-3 ft		
10/30/2013	CON	A-15	17:25:36	17:25:41	HSEA	45	90	50	1	0	None	LO	SI		V	G	OC	0	0	0-3 ft		
10/30/2013	POST		17:29:19	17:29:41	HSEA	120	110	100	1	0	Toward	SW-N	SI		NONE	G	S	0	1	0-3 ft		
10/30/2013	POST	B-14	17:31:28	17:33:10	HSEA	40	220	80	1	0	None	RE			NONE	G	OC	0	0	0-3 ft		
10/30/2013	POST	B-14	17:38:21	17:38:45	HSEA	20	160	30	1	0	Away	SW-SE	DI		NONE	G	OC	0	0	0-3 ft		
10/30/2013	POST		17:39:59	17:40:33	HSEA	100	90		1	1	None	RE	SI		NONE	G	S	0	1	0-3 ft		
10/30/2013	POST	B-14	17:42:21	17:42:24	HSEA	30	100	25	1	0	Away	SW-E			NONE	G	OC	0	0	0-3 ft		
10/30/2013	POST	B-14	17:43:23	17:43:38	HSEA	45	120	30	1	0	None	RE			NONE	G	OC	0	0	0-3 ft		
10/30/2013	POST		17:45:18	17:48:32	HSEA	100	90		1	1	None	RE	SI		NONE	G	S	0	1	0-3 ft		
10/30/2013	POST	B-14	17:45:43	17:45:53	HSEA	45	150	35	1	0	Away	RE			NONE	G	OC	0	0	0-3 ft		
10/31/2013	CON	NA	8:51:11	8:51:14	HSEA	70	50		1	0	None	LO	DI		NONE	G	OC	0	1	0-3 ft		
10/31/2013	CON	NA	9:05:54	9:05:55	HSEA	300	160		1	0	Away	SW-S	DI		NONE	G	OC	0	1	0-3 ft		
10/31/2013	CON	NA	10:28:07	10:28:14	HSEA	360	204		1	0	Away	SW-S	DI		NONE	G	OC	0	1	0-3 ft		
10/31/2013	CON	NA	10:34:02	10:34:13	HSEA	82	54		1	0	None	LO	SI		NONE	G	OC	0	1	0-3 ft		
10/31/2013	CON	NA	10:47:14	10:47:22	HSEA	20	180		1	0	Parallel	SW-N	DI		NONE	G	OC	0	1	0-3 ft		
10/31/2013	CON	B-16	10:55:55	10:56:10	HSEA	2	270	48	1	1	Parallel	RE			NONE	E	OC	0	0	0-3 ft		juvenile very near corner of rig during lull in pile driving
10/31/2013	CON	NA	10:59:05	10:59:16	HSEA	25	190	35	1	0	None	RE	DI		NONE	G	OC	0	1	0-3 ft		
10/31/2013	CON	A-16	11:53:07	11:53:11	HSEA	30	270	220	1	0	Parallel	SW-S	DI		V	G	OC	0	1	0-3 ft		
10/31/2013	CON	NA	12:32:52	12:33:03	HSEA	15	170		1	0	None	RE	SI		NONE	G	OC	0	1	0-3 ft		
10/31/2013	CON	NA	12:42:06	12:42:20	HSEA	30	160		1	0	Away	SW-S	DI		NONE	G	OC	0	1	0-3 ft		
10/31/2013	CON	NA	13:11:36	13:11:46	HSEA	110	170		1	0	Parallel	SW-S	DI		NONE	G	OC	0	1	0-3 ft		
10/31/2013	CON	NA	13:14:43	13:14:54	HSEA	170	220		1	0	None	LO	DI		NONE	G	OC	0	1	0-3 ft		
10/31/2013	CON	NA	13:19:07	13:19:13	HSEA	10	70		1	1	Away	SW-S	DI		NONE	G	OC	0	1	0-3 ft		

Date	Event Code	Pile	Start Time	End Time	Species	Dist. To animal (m)	Dir. To animal (deg)	Dist to pile (m)	Best num of animals	Num of juv	Relative motion	Behavior 1	Behavior 2	Behavior 3	Const Type	Visi-bility	Weather	Glare (%)	BSS	Wave ht	Swell Dir	Comments
10/31/2013	CON	NA	13:21:48	13:24:34	HSEA	300	120		1	0	Away	SW-SE	DI		NONE	G	OC	0	1	0-3 ft		
10/31/2013	CON	B17	13:35:05	13:35:36	HSEA	250	150	350	1	0	Parallel	SW-E	DI		NONE	G	OC	0	1	0-3 ft		
10/31/2013	CON	V.X-53	14:09:42	14:09:53	HSEA	40	275	50	1	0	Away	SW-SE			NONE	E	S	0	0	0-3 ft		
10/31/2013	CON	NA	14:31:02	14:31:33	HSEA	150	90	0	1	0	Toward	SW-N	DI		NONE	G	PC	0	1	0-3 ft		
10/31/2013	CON	NA	14:39:14	14:39:21	HSEA	131	110	120	1	0	Away	SW-N	DI		NONE	G	PC	0	1	0-3 ft		
10/31/2013	CON	NA	15:06:01	15:06:20	HSEA	40	180		1	0	None	SW-N	RE	DI	NONE	G	PC	0	1	0-3 ft		
10/31/2013	CON	NA	15:17:55	15:18:05	HSEA	390	110	300	1	0	Away	SW-S	DI		NONE	G	PC	0	1	0-3 ft		
10/31/2013	CON	NA	15:25:00	15:25:25	HSEA	75	20		1	0	Toward	SW-SE	DI		NONE	G	PC	0	1	0-3 ft		
10/31/2013	CON		15:55:13	15:56:59	HSEA	100	170		1	0	Away	SW-S	SI		NONE	G	S	0	1	0-3 ft		
10/31/2013	CON	NA	16:08:01	16:08:27	HSEA	135	110		1	1	Toward	SW-N	DI		NONE	G	PC	0	1	0-3 ft		
10/31/2013	CON	A-17	16:13:25	16:13:32	HSEA	100	90	100	1	0	Parallel	SW-N	SI		V	G	S	0	1	0-3 ft		
10/31/2013	CON	NA	16:20:53	16:21:05	HSEA	105	80		1	0	Toward	SW-N	DI		NONE	G	PC	0	1	0-3 ft		
10/31/2013	CON	A-17	16:22:01	16:22:12	HSEA	40	90	30	1	0	Toward	SW-NW			NONE	E	OC	0	0	0-3 ft		animal sighting just after pile driving ended
10/31/2013	POST	NA	16:28:24	16:28:35	HSEA	80	10		1	1	Toward	SW-E	DI		NONE	G	PC	0	1	0-3 ft		
11/1/2013	PRE	NA	8:33:03	8:33:11	HSEA	20	250		1	0	Parallel	SW-N	DI		NONE	G	PC	0	1	0-3 ft		
11/1/2013	CON	NA	9:10:03	9:10:34	HSEA	300	180		1	0	Parallel	SW-E	DI		NONE	G	PC	0	1	0-3 ft		
11/1/2013	CON	NA	10:14:56	10:15:00	HSEA	40	40		1	1	None	LO	DI		NONE	G	PC	0	1	0-3 ft		
11/1/2013	CON	NA	10:18:02	10:19:55	HSEA	120	160		1	0	None	RE	SI		NONE	G	PC	0	1	0-3 ft		
11/1/2013	CON	NA	11:03:02	11:03:30	HSEA	280	160		1	0	None	RE	SI		NONE	G	PC	0	1	0-3 ft		
11/1/2013	CON	A-18	11:25:23	11:26:11	HSEA	85	10		1	1	None	LO	SI		V	G	PC	0	1	0-3 ft		
11/1/2013	CON	NA	11:32:52	11:32:54	HSEA	40	290		2	0	Away	SW-NW	DI		NONE	G	PC	0	1	0-3 ft		
11/1/2013	CON	NA	11:42:43	11:42:58	HSEA	90	90		1	0	Toward	SW-S	DI		NONE	G	PC	0	1	0-3 ft		
11/1/2013	CON	NA	12:01:07	12:01:09	HSEA	150	180		1	0	Parallel	SW-E			NONE	G	PC	0	1	0-3 ft		
11/1/2013	CON	B-19	12:18:47	12:19:08	HSEA	250	190	350	1	0	Away	SW-NW	DI		V	G	PC	0	1	0-3 ft		
11/1/2013	CON	NA	12:28:02	12:28:36	HSEA	85	160		1	0	None	LO	SI		NONE	G	PC	0	1	0-3 ft		
11/1/2013	OTHR	NA	12:44:03	12:44:04	CASL	370	160		7	0	None	RE	SI	HO	OTHER	G	PC	0	1	0-3 ft		4 resting in water, 3 hauled out
11/1/2013	CON	NA	13:39:02	13:39:10	HSEA	50	180		1	0	Toward	SW-NE	DI		NONE	G	PC	0	1	0-3 ft		
11/1/2013	CON	NA	13:39:10	13:13:28	HSEA	30	180		1	0	None	LO	SI		NONE	G	OC	0	1	0-3 ft		
11/1/2013	CON	NA	13:55:30	13:55:51	HSEA	200	160		1	0	Away	SW-SW	SI		NONE	G	PC	0	1	0-3 ft		
11/1/2013	CON	A-19	14:05:00	14:05:10	HSEA	120	180	40	1	0	Toward	SW-W	DI		V	G	PC	0	1	0-3 ft		

Date	Event Code	Pile	Start Time	End Time	Species	Dist. To animal (m)	Dir. To animal (deg)	Dist to pile (m)	Best num of animals	Num of juv	Relative motion	Behavior 1	Behavior 2	Behavior 3	Const Type	Visi-bility	Weather	Glare (%)	BSS	Wave ht	Swell Dir	Comments
11/1/2013	CON	NA	14:35:07	14:35:49	HSEA	100	160		1	0	Toward	SW-NW	DI		NONE	G	PC	0	1	0-3 ft		
11/1/2013	CON	NA	14:43:00	14:43:29	HSEA	400	140		1	0	Parallel	SW-W	DI		NONE	G	PC	0	1	0-3 ft		
11/1/2013	CON	NA	14:45:27	14:45:34	HSEA	20	30		1	0	None	LO	SI		NONE	G	PC	0	1	0-3 ft		
11/1/2013	CON	B-20	15:03:50	15:03:55	CASL	180	190	130	1	0	Parallel	SW-E	DI		V	G	PC	0	1	0-3 ft		
11/1/2013	CON	B-20	15:06:36	15:06:38	CASL	400	180	350	1	0	Parallel	PO			V	G	PC	0	1	0-3 ft		animal leaping out of water cleared surface by 2
11/1/2013	CON	NA	15:31:53	15:31:54	HSEA	140	110		1	0	Away	SW-SW	DI		NONE	G	S	5	1	0-3 ft		
11/1/2013	CON	NA	15:40:23	15:40:28	HSEA	120	175	190	1	0	Toward	SW-N			NONE	G	S	5	1	0-3 ft		
11/1/2013	CON	A-20	15:46:42	15:46:50	HSEA	150	110	120	1	0	Toward	SW-N	DI		V	G	S	5	1	0-3 ft		
11/1/2013	CON	NA	15:57:40	15:57:51	HSEA	160	145		1	0	Toward	SW-N	DI		NONE	G	S	5	1	0-3 ft		
11/1/2013	CON	NA	16:03:55	16:04:00	HSEA	75	90		1	0	None	LO	DI		NONE	G	S	5	1	0-3 ft		
11/1/2013	CON	NA	16:33:50	16:31:01	HSEA	50	15		1	0	Away	SW-NW	DI		NONE	G	S	5	1	0-3 ft		
11/1/2013	CON	V.X-53	17:02:00	17:02:11	HSEA	130	180	170	1	0	Away	SW-NW	DI		I	G	S	5	1	0-3 ft		
11/1/2013	CON	V.X-53	17:04:53	17:05:01	HSEA	40	200	135	1	0	Away	SW-NW	DI		I	G	S	5	1	0-3 ft		
11/1/2013	POST	NA	17:18:43	17:18:54	HSEA	50	90		1	0	None	LO	SI		NONE	G	PC	5	1	0-3 ft		
11/1/2013	POST	NA	17:25:36	17:25:44	HSEA	10	270		1	1	Away	SW-N	LO	SI	NONE	G	PC	5	1	0-3 ft		
11/4/2013	PRE	NA	8:54:02	8:54:22	HSEA	100	200	250	1	0	Toward	SW-NE			NONE	G	PC	0	1	0-3 ft		
11/4/2013	PRE	NA	8:56:24	8:56:36	HSEA	120	110	130	1	0	Toward	SW-NE			NONE	G	PC	0	1	0-3 ft		
11/4/2013	PRE	NA	9:06:27	9:07:03	HSEA	100	140	100	1	0	Toward	SW-S			NONE	G	PC	0	1	0-3 ft		
11/4/2013	CON	NA	9:13:37	9:20:22	HSEA	60	165	60	1		None	MI	SI		NONE	E	OC	0	0	0-3 ft		
11/4/2013	CON	A-21	9:20:24	9:20:28	HSEA	56	180	65	1	0	None	RE	SI		NONE	E	OC	0	0	0-3 ft		
11/4/2013	CON	NA	9:38:00	9:38:12	HSEA	300	180	400	1	0	Parallel	SW-W			NONE	G	PC	0	1	0-3 ft		
11/4/2013	CON	NA	9:46:09	9:46:26	HSEA	30	190	40	1	1	Away	SW-NE			NONE	G	PC	0	1	0-3 ft		
11/4/2013	CON	A-21	9:48:24	9:49:46	HSEA	100	200	120	1		Away	TR-S			NONE	E	OC	0	0	0-3 ft		
11/4/2013	CON	NA	10:09:16	10:09:23	HSEA	120	138	200	1	0	Away	SW-S	DI		NONE	G	PC	0	1	0-3 ft		
11/4/2013	CON	NA	10:24:52	10:25:16	HSEA	110	27	75	1	0	None	LO	SI		NONE	G	PC	0	1	0-3 ft		
11/4/2013	CON	NA	10:28:35	10:29:08	HSEA	80	98	70	1	0	Toward	SW-N	DI		NONE	G	PC	0	1	0-3 ft		
11/4/2013	CON	NA	10:48:18	10:48:22	HSEA	40	90	50	1	0	None	MI	DI		NONE	G	PC	0	1	0-3 ft		
11/4/2013	CON	NA	10:55:22	10:55:44	HSEA	30	0	120	1	0	None	RE	DI		NONE	G	PC	0	1	0-3 ft		
11/4/2013	CON	NA	10:58:45	10:59:03	HSEA	55	230	55	1	0	Toward	RE	SI		NONE	E	OC	0	0	0-3 ft		
11/4/2013	CON	NA	11:03:14	11:03:20	HSEA	30	270	80	1	0	Toward	SW-N			NONE	G	PC	0	1	0-3 ft		

Date	Event Code	Pile	Start Time	End Time	Species	Dist. To animal (m)	Dir. To animal (deg)	Dist to pile (m)	Best num of animals	Num of juv	Relative motion	Behavior 1	Behavior 2	Behavior 3	Const Type	Visi-bility	Weather	Glare (%)	BSS	Wave ht	Swell Dir	Comments
11/4/2013	CON	V-20	11:09:28	11:09:33	HSEA	15	280	80	1	1	None	RE	DI		NONE	G	PC	0	1	0-3 ft		
11/4/2013	CON	V-20	11:12:54	11:13:02	HSEA	200	70	200	1	0	Parallel	SW-S			NONE	G	PC	0	1	0-3 ft		
11/4/2013	CON	B-22	11:15:05	11:15:19	HSEA	150	270	150	1	0	Toward	SW-N	DI		NONE	G	PC	0	1	0-3 ft		
11/4/2013	CON	B-22	11:17:58	11:18:06	HSEA	10	0	100	1	0	Toward	SW-S			NONE	G	PC	0	1	0-3 ft		
11/4/2013	CON	B-22	11:21:20	11:22:04	HSEA	200	180	370	1	0	Parallel	SW-E			NONE	G	PC	0	1	0-3 ft		
11/4/2013	CON	B-22	11:24:59	11:25:04	HSEA	42	270	41	1	0	Away	SW-S			V	E	OC	0	0	0-3 ft		
11/4/2013	CON	B-22	11:29:19	11:29:25	HSEA	20	150	150	1	0	None	RE	SI		V	G	PC	0	1	0-3 ft		
11/4/2013	CON	B-22	11:31:33	11:31:47	HSEA	150	200	280	2	0	Parallel	SW-W	DI		V	G	PC	0	1	0-3 ft		
11/4/2013	CON	B-22	11:35:41	11:35:42	HSEA	10	90	50	1	0	None	DI			V	G	PC	0	1	0-3 ft		
11/4/2013	CON	V-20	11:43:23	11:43:26	HSEA	10	110	70	1	0	None	MI	DI		NONE	G	PC	0	1	0-3 ft		
11/4/2013	CON	NA	11:48:00	11:48:03	HSEA	38	200	35	1	0	None	RE			NONE	E	OC	0	0	0-3 ft		
11/4/2013	CON	V-20	11:48:34	11:48:36	HSEA	15	90	40	1	0	None	DI			NONE	G	PC	0	1	0-3 ft		
11/4/2013	CON	V-20	11:54:04	11:54:28	HSEA	20	30	100	1	0	Parallel	SW-N	DI		I	G	PC	0	1	0-3 ft		
11/4/2013	CON	V-20	11:55:20	11:55:50	HSEA	28	260	23	1	0	Away	MI			I	E	OC	0	0	0-3 ft		
11/4/2013	CON	V-20	11:56:59	11:57:03	HSEA	38	200	38	2	0	None	MI			I	E	OC	0	0	0-3 ft		
11/4/2013	CON	V-20	11:58:04	12:00:56	HSEA	46	270	40	1	0	Parallel	SW-E			I	E	OC	0	0	0-3 ft		
11/4/2013	CON	V-20	11:58:42	11:58:59	HSEA	60	0	50	1	0	None	MI	SI		NONE	G	PC	0	1	0-3 ft		
11/4/2013	CON	V-20	12:02:31	12:02:35	HSEA	30	190	30	1	0	None	RE			NONE	E	OC	0	0	0-3 ft		
11/4/2013	CON	V-20	12:06:32	12:09:05	HSEA	5	90	25	3	0	None	MI	SI		NONE	G	PC	0	1	0-3 ft		
11/4/2013	CON	V-20	12:06:37	12:06:40	HSEA	41	200	35	1		None	RE			NONE	E	OC	0	0	0-3 ft		
11/4/2013	CON	V-20	12:11:58	12:12:00	HSEA	100	0	55	1	0	None	MI	SI		I	G	PC	0	1	0-3 ft		
11/4/2013	CON	V-20	12:12:33	12:12:36	HSEA	20	340	60	1	0	None	SW-N	DI		I	G	PC	0	1	0-3 ft		
11/4/2013	CON	V-20	12:12:49	12:12:54	HSEA	45	270	45	1	0	None	LO			I	E	OC	0	0	0-3 ft		
11/4/2013	CON	V-20	12:13:45	12:13:50	HSEA	65	280	50	1	0	None	MI			I	E	OC	0	0	0-3 ft		
11/4/2013	CON	V-20	12:15:23	12:16:06	HSEA	50	90	150	1	0	Parallel	SW-S			NONE	G	PC	0	1	0-3 ft		
11/4/2013	CON	V-20	12:23:14	12:23:27	HSEA	45	195	50	1	0	None	LO			NONE	E	OC	0	0	0-3 ft		
11/4/2013	CON	V-20	12:26:09	12:26:20	HSEA	53	265	50	1	0	Toward	SW-E			I	E	OC	0	0	0-3 ft		
11/4/2013	CON	V-20	12:28:16	12:28:20	HSEA	50	270	25	1	0	None	SI			NONE	G	PC	0	1	0-3 ft		
11/4/2013	CON	V-20	12:28:57	12:29:07	HSEA	40	257	38	1	0	None	RE			NONE	E	OC	0	0	0-3 ft		
11/4/2013	CON	NA	12:37:35	12:37:47	CASL	150	0	120	1	0	Toward	TR-N			NONE	G	PC	0	1	0-3 ft		
11/4/2013	CON	V-20	12:38:32	12:38:56	HSEA	20	270	100	1	0	None	MI			NONE	G	PC	0	1	0-3 ft		
11/4/2013	CON	X-20	12:44:27	12:44:28	HSEA	40	180	40	1	0	None	MI			NONE	G	PC	0	1	0-3 ft		
11/4/2013	CON	X-20	12:45:20	12:45:37	HSEA	60	250	80	1	0	Toward	SW-N			I	G	PC	0	1	0-3 ft		
11/4/2013	CON	X-20	12:49:24	12:49:53	HSEA	35	280	34	1	0	Parallel	SW-N			I	E	OC	0	0	0-3 ft		
11/4/2013	CON	X-20	12:51:57	12:52:24	HSEA	42	267	43	1	1	None	MI			I	E	OC	0	0	0-3 ft		
11/4/2013	CON	X-20	12:52:55	12:52:58	HSEA	100	180	150	1	0	None	MI	SI		NONE	G	PC	0	1	0-3 ft		

Date	Event Code	Pile	Start Time	End Time	Species	Dist. To animal (m)	Dir. To animal (deg)	Dist to pile (m)	Best num of animals	Num of juv	Relative motion	Behavior 1	Behavior 2	Behavior 3	Const Type	Visi-bility	Weather	Glare (%)	BSS	Wave ht	Swell Dir	Comments
11/4/2013	CON	NA	13:02:55	13:03:27	HSEA	40	276	45	1	1	None	RE	DI		NONE	E	OC	0	0	0-3 ft		
11/4/2013	CON	V-19	13:13:56	13:13:57	HSEA	70	0	60	1	0	None	SI			NONE	G	PC	0	1	0-3 ft		
11/4/2013	CON	V-19	13:19:44	13:20:25	HSEA	200	90	300	2	0	Parallel	SW-N			I	G	PC	0	1	0-3 ft		
11/4/2013	CON	V-19	13:26:09	13:26:15	HSEA	5	90	40	1	0	None	MI	DI		I	G	PC	0	1	0-3 ft		
11/4/2013	CON	V-19	13:35:00	13:35:02	HSEA	48	213	45	1	0	None	RE			I	E	OC	0	0	0-3 ft		
11/4/2013	CON	V-19	13:40:48	13:40:59	HSEA	150	150	250	1	0	None	MI	SI		NONE	G	PC	0	1	0-3 ft		
11/4/2013	CON	V-19	13:42:55	13:43:05	HSEA	330	160	300	1	0	None	MI	DI		NONE	G	PC	0	1	0-3 ft		
11/4/2013	CON	X-19	13:54:39	13:54:41	HSEA	200	180	200	1	0	Parallel	SW-S	SI		NONE	G	PC	0	1	0-3 ft		
11/4/2013	CON	X-19	13:59:43	14:00:02	HSEA	38	275	26	1	0	None	RE	SI		I	E	OC	0	0	0-3 ft		
11/4/2013	CON	X-19	14:11:57	14:12:06	HSEA	10	100	70	1	0	Away	SW-E	DI		NONE	G	PC	0	1	0-3 ft		
11/4/2013	CON	X-18	15:06:45	15:06:48	HSEA	20	300	150	1	0	None	MI	DI		NONE	G	PC	0	1	0-3 ft		
11/4/2013	CON	X-19	15:11:13	15:11:16	HSEA	83	0	79	1	0	None	MI			NONE	E	OC	0	0	0-3 ft		
11/4/2013	CON	V-17	15:19:20	15:19:20	HSEA	80	90	150	1	0	None	DI			I	G	PC	0	1	0-3 ft		
11/4/2013	CON	V-17	15:20:26	15:21:21	HSEA	130	90	150	1	0	Parallel	SW-S	DI		I	G	PC	0	1	0-3 ft		
11/4/2013	CON	X-17	15:28:57	15:29:06	HSEA	10	110	80	1	0	Parallel	SW-SW	DI		NONE	G	PC	0	1	0-3 ft		
11/4/2013	CON	B-23	16:31:22	16:31:41	HSEA	80	100	100	1		Toward	SW-N	SI		V	G	OC	0	1	0-3 ft		
11/5/2013	PRE	NA	7:16:12	7:16:23	HSEA	20	100		1	0	Away	SW-E	DI		NONE	P	F	0	1	0-3 ft		
11/5/2013	CON	NA	8:49:41	8:49:47	HSEA	45	295	50	1	1	None	RE			NONE	G	F	0	0	0-3 ft		
11/5/2013	CON	NA	8:52:18	8:52:34	HSEA	45	295	50	1	1	None	RE	SI		NONE	G	F	0	0	0-3 ft		
11/5/2013	CON	A-23	8:56:17	8:56:21	HSEA	45	275	45	1	1	None	RE	SI		V	G	F	0	0	0-3 ft		
11/5/2013	CON	B-23	8:58:56	8:59:58	HSEA	35	145	30	1	0	Toward	SW-NW	DI		NONE	G	OC	0	1	0-3 ft		
11/5/2013	CON	A-23	8:59:07	8:59:11	HSEA	45	287	50	1	1	None	RE	SI		V	G	F	0	0	0-3 ft		
11/5/2013	CON	A-23	9:01:07	9:01:21	HSEA	38	265	53	1	1	Parallel	RE	SI		V	G	F	0	0	0-3 ft		
11/5/2013	CON	A-23	9:03:02	9:03:14	HSEA	67	315	57	1	1	None	RE	SI		NONE	G	F	0	0	0-3 ft		
11/5/2013	CON	A-23	9:06:18	9:06:24	HSEA	35	275	43	1	1	None	RE	SI		NONE	G	F	0	0	0-3 ft		
11/5/2013	CON	V.X-54	9:17:05	9:17:10	HSEA	45	100	15	1	0	Toward	SW-E			NONE	G	OC	0	1	0-3 ft		
11/5/2013	CON	V.X-54	9:19:21	9:19:43	HSEA	110	90	60	1	0	None	RE	SI		V	P	F	0	1	0-3 ft		
11/5/2013	CON	V.X-54	9:30:51	9:31:03	HSEA	35	300	37	1	0	Away	SW-N			NONE	G	F	0	0	0-3 ft		
11/5/2013	CON	V.X-54	9:37:23	9:37:44	HSEA	35	315	53	1	0	None	RE	SI		NONE	G	F	0	0	0-3 ft		
11/5/2013	CON	NA	9:39:50	9:40:05	HSEA	170	40	60	1	0	None	RE	SI		NONE	G	L	0	1	0-3 ft		
11/5/2013	CON	NA	9:47:50	9:47:57	HSEA	115	50	15	1	0	None	RE	SI		NONE	G	L	0	1	0-3 ft		
11/5/2013	CON	NA	9:54:47	9:54:55	HSEA	90	60	40	1	1	None	RE			NONE	G	L	0	1	0-3 ft		
11/5/2013	CON	A-24	10:13:30	10:18:49	CASL	150	11	110	1	0	Away	TR-N	DI		V	G	L	0	1	0-3 ft		
11/5/2013	CON	A-24	10:15:35	10:15:56	HSEA	45	90	45	1	1	Away	SW-E			V	G	F	0	0	0-3 ft		
11/5/2013	CON	A-24	10:20:32	10:20:44	CASL	75	18	100	1	0	Parallel	TR-N	DI		V	M	L	0	1	0-3 ft		

Date	Event Code	Pile	Start Time	End Time	Species	Dist. To animal (m)	Dir. To animal (deg)	Dist to pile (m)	Best num of animals	Num of juv	Relative motion	Behavior 1	Behavior 2	Behavior 3	Const Type	Visi-bility	Weather	Glare (%)	BSS	Wave ht	Swell Dir	Comments
11/5/2013	CON	NA	12:22:43	12:23:44	HSEA	40	90		1	1	None	SW-N	DI		NONE	M	OC	0	1	0-3 ft		
11/5/2013	CON	NA	12:28:04	12:28:09	HSEA	70	90		1	0	None	LO	DI		NONE	M	OC	0	1	0-3 ft		
11/5/2013	CON	NA	12:33:09	12:33:31	HSEA	120	70		1	1	Toward	SW-N	DI		NONE	M	OC	0	1	0-3 ft		
11/5/2013	CON	NA	12:40:05	12:40:26	HSEA	120	90		1	1	Toward	SW-N	DI		NONE	M	OC	0	1	0-3 ft		
11/5/2013	CON	NA	13:19:07	13:19:10	HSEA	80	30		1	0	None	LO	SI		NONE	M	OC	0	1	0-3 ft		
11/5/2013	CON	NA	13:22:15	13:22:18	HSEA	70	80		1	1	None	LO	SI		NONE	M	OC	0	1	0-3 ft		
11/5/2013	CON	NA	13:36:17	13:36:20	HSEA	5	210	5	1	1	None	LO	DI		NONE	G	OC	0	0	0-3 ft		
11/5/2013	CON	NA	13:38:35	13:38:39	HSEA	15	270		1	0	None	LO	SI		NONE	M	OC	0	1	0-3 ft		
11/5/2013	CON	NA	13:50:06	13:50:17	HSEA	50	10		1	0	None	LO	SI		NONE	M	OC	0	1	0-3 ft		
11/5/2013	CON	NA	13:53:24	13:53:30	HSEA	30	340		1	0	None	LO	SI		NONE	M	OC	0	1	0-3 ft		
11/5/2013	CON	NA	13:55:08	13:55:29	HSEA	50	20		1	1	None	RE			NONE	M	OC	0	1	0-3 ft		
11/5/2013	CON	NA	14:07:34	14:07:44	HSEA	15	230		1	1	Away	SW-W	DI		NONE	M	OC	0	1	0-3 ft		
11/5/2013	CON	NA	14:15:27	14:15:42	HSEA	45	230	25	1	0	None	RE	DI		NONE	G	OC	0	0	0-3 ft		
11/5/2013	CON	X-16	14:15:47	14:15:52	HSEA	60	270	20	1	0	Away	SW-SW			NONE	M	OC	0	1	0-3 ft		
11/5/2013	CON	X-16	14:18:59	14:19:16	HSEA	30	230	22	1	0	Parallel	MI			I	G	OC	0	0	0-3 ft		
11/5/2013	CON	NA	14:21:17	14:22:21	HSEA	130	20		1	0	Parallel	SW-W	DI		NONE	M	OC	0	1	0-3 ft		
11/5/2013	CON	NA	14:27:03	14:27:34	HSEA	140	60		1	0	None	SW-W			NONE	M	OC	0	1	0-3 ft		
11/5/2013	CON	NA	14:28:12	14:28:15	HSEA	50	100		1	0	Parallel	SW-N	DI		NONE	M	OC	0	1	0-3 ft		
11/5/2013	CON	NA	14:37:26	14:38:05	HSEA	80	340		1	0	Toward	SW-W	DI		NONE	M	OC	0	1	0-3 ft		
11/5/2013	CON	V.X-55	15:05:00	15:05:06	HSEA	150	140		1	0	Parallel	SW-NE	DI		NONE	M	OC	0	1	0-3 ft		
11/5/2013	CON	A-25	15:31:35	15:31:39	HSEA	180	170	180	1	0	None	MI			NONE	G	OC	0	1	0-3 ft		
11/5/2013	CON	X-16	15:36:50	15:37:11	HSEA	43	220	40	2	2	Parallel	SW-N	MI	SI	NONE	G	OC	0	0	0-3 ft		
11/5/2013	CON	X-16	15:38:20	15:42:53	HSEA	35	230	45	1	1	None	MI	SI		NONE	G	OC	0	0	0-3 ft		
11/5/2013	CON	AB26-1	15:53:59	15:54:01	HSEA	45	160	40	1	1	None	PL			NONE	G	OC	0	1	0-3 ft		
11/5/2013	CON	AB26-1	16:04:39	16:05:17	HSEA	65	160	60	2	1	None	MI	SW-S		NONE	G	OC	0	1	0-3 ft		
11/5/2013	CON	NA	16:06:35	16:06:41	HSEA	10	270	24	1	1	None	RE			NONE	G	OC	0	0	0-3 ft		
11/5/2013	CON	NA	16:11:02	16:11:19	HSEA	14	345	30	1	1	None	RE			NONE	G	OC	0	0	0-3 ft		
11/5/2013	CON	V.X-55	16:15:12	16:15:31	HSEA	110	80	95	1	0	Parallel	SW-N			V	M	OC	0	1	0-3 ft		
11/5/2013	CON	V.X-55	16:15:32	16:15:56	HSEA	83	120	100	1	0	Parallel	SW-N	DI		V	M	OC	0	1	0-3 ft		
11/5/2013	CON	V.X-55	16:17:54	16:18:06	HSEA	85	60	70	1	0	Parallel	RE	DI		V	M	OC	0	1	0-3 ft		
11/5/2013	CON	V.X-55	16:19:11	16:20:25	HSEA	83	90	80	1	0	Parallel	RE	SI		V	M	OC	0	1	0-3 ft		

Date	Event Code	Pile	Start Time	End Time	Species	Dist. To animal (m)	Dir. To animal (deg)	Dist to pile (m)	Best num of animals	Num of juv	Relative motion	Behavior 1	Behavior 2	Behavior 3	Const Type	Visi-bility	Weather	Glare (%)	BSS	Wave ht	Swell Dir	Comments
11/5/2013	CON	V.X-55	16:25:57	16:26:06	HSEA	42	279	45	1	1	None	RE	SI		V	G	OC	0	0	0-3 ft		
11/5/2013	CON	V.X-55	16:26:05	16:26:29	HSEA	120	350	200	1	0	Toward	RE	SI		V	M	OC	0	1	0-3 ft		
11/5/2013	CON	V.X-55	16:37:08	16:37:15	HSEA	80	140	150	1	0	Away	SW-S	DI		V	M	OC	0	1	0-3 ft		
11/5/2013	CON	V.X-55	16:39:57	16:40:27	HSEA	100	160	120	1	0	None	MI			V	M	OC	0	1	0-3 ft		
11/5/2013	POST	NA	16:56:42	16:57:22	HSEA	9	210	5	1	1	None	RE	SI		NONE	G	OC	0	0	0-3 ft		
11/5/2013	POST	NA	17:09:47	17:10:44	HSEA	45	170		1	0	None	SW-S			NONE	B	OC	0	1	0-3 ft		
11/6/2013	PRE	NA	8:25:10	8:25:16	HSEA	90	320		1	0	Toward	SW-E	DI		NONE	B	OC	0	1	0-3 ft		
11/6/2013	OTHR	NA	8:38:47	8:38:52	HSEA	485	280		1	0	None	HO			OTHER	B	OC	0	1	0-3 ft		Hauled out on WRA buoy/fence. Observed harbor seals hauled out on buoy prior days as well (2013)
11/6/2013	CON	NA	8:46:06	9:18:46	HSEA	72	90		1	0	Away	SW-S	RE	DI	NONE	B	OC	0	1	0-3 ft		V. light coloration, moved south and surfaced at 120 degrees, swimming north. Surfaced 4 more times, swimming and resting at surface around the piles
11/6/2013	CON	NA	9:12:45	9:13:36	HSEA	100	355		1	0	Away	SW-SW	LO	DI	NONE	B	OC	0	1	0-3 ft		Surfaced swimming SE
11/6/2013	CON	NA	9:30:23	9:30:29	HSEA	45	140		1	0	Away	SW-S			NONE	B	OC	0	1	0-3 ft		
11/6/2013	CON	NA	9:32:27	9:33:16	HSEA	54	180	52	1	0	Away	MI			NONE	G	OC	0	1	0-3 ft		
11/6/2013	CON	NA	9:35:40	9:36:11	HSEA	54	180	56	1	0	None	RE	SI		NONE	G	OC	0	1	0-3 ft		
11/6/2013	CON	NA	9:51:49	9:51:58	HSEA	200	190		1	0	Parallel	SW-E	DI		NONE	B	OC	0	1	0-3 ft		
11/6/2013	CON	NA	10:00:04	10:00:20	HSEA	40	90		1	1	None	SW-N	DI		NONE	B	OC	0	1	0-3 ft		small animal near piles
11/6/2013	CON	NA	10:10:56	10:11:25	HSEA	250	335	220	1	0	Parallel	SW-NE	DI		NONE	B	OC	0	1	0-3 ft		
11/6/2013	CON	NA	10:13:36	10:14:29	HSEA	55	345	50	1	0	Toward	SW-SW	DI		NONE	B	OC	0	1	0-3 ft		
11/6/2013	CON	A-26	10:31:39	10:32:16	HSEA	59	25	62	1	1	None	RE	MI		V	G	OC	0	1	0-3 ft		
11/6/2013	CON	26	10:41:52	10:42:04	HSEA	100	120	125	1	0	Parallel	SW-NE	DI		V	B	OC	0	1	0-3 ft		
11/6/2013	CON	A-26	10:47:25	10:47:32	HSEA	100	2	105	1	0	None	RE	DI		V	G	OC	0	1	0-3 ft		
11/6/2013	CON	26	10:48:46	10:48:51	HSEA	110	175	130	1	0	Toward	SW-N	DI		V	B	OC	0	1	0-3 ft		
11/6/2013	CON	NA	10:52:18	10:52:32	HSEA	123	0	125	1	0	None	RE			NONE	G	OC	0	1	0-3 ft		
11/6/2013	CON	26	10:52:26	10:52:38	HSEA	76	100	215	1	0	Toward	SW-N			V	B	OC	0	1	0-3 ft		
11/6/2013	CON	26	11:00:21	11:00:36	HSEA	225	140	300	1	0	Toward	SW-N			NONE	B	OC	0	1	0-3 ft		
11/6/2013	CON	26	11:08:00	11:08:03	HSEA	125	70	150	1	0	Toward	SW-N			V	B	OC	0	1	0-3 ft		
11/6/2013	CON	26	11:10:18	11:10:31	HSEA	125	70	145	1	0	Away	SW-S			NONE	B	OC	0	1	0-3 ft		
11/6/2013	CON	NA	11:11:23	11:11:47	HSEA	65	10	67	1	1	None	RE	MI		NONE	G	OC	0	1	0-3 ft		
11/6/2013	CON	NA	11:33:07	11:33:49	HSEA	450	180		1	0	Parallel	SW-E			NONE	B	OC	0	1	0-3 ft		Trying to jump over/haul out on boom surrounding package.
11/6/2013	CON	NA	13:16:21	13:16:41	HSEA	75	160	225	1	0	None	LO	SI		NONE	B	OC	0	1	0-3 ft		

Date	Event Code	Pile	Start Time	End Time	Species	Dist. To animal (m)	Dir. To animal (deg)	Dist to pile (m)	Best num of animals	Num of juv	Relative motion	Behavior 1	Behavior 2	Behavior 3	Const Type	Visi-bility	Weather	Glare (%)	BSS	Wave ht	Swell Dir	Comments
11/6/2013	CON	NA	13:37:18	13:38:32	HSEA	70	270	70	1	0	None	LO	MI	DI	NONE	B	OC	0	1	0-3 ft		
11/6/2013	CON	NA	13:42:17	13:42:28	HSEA	76	90	99	1	1	None	RE	DI		NONE	G	OC	0	1	0-3 ft		
11/6/2013	CON	NA	13:51:12	13:51:18	HSEA	35	270	40	1	1	None	MI	SI		NONE	G	OC	0	1	0-3 ft		
11/6/2013	CON	NA	13:53:17	13:53:28	HSEA	8	270	35	1	1	None	RE	SI		NONE	G	OC	0	1	0-3 ft		
11/6/2013	CON	NA	14:00:50	14:08:22	HSEA	15	45	50	1	0	None	RE	SI		NONE	B	OC	0	1	0-3 ft		
11/6/2013	CON	NA	14:08:25	14:08:43	HSEA	40	180	75	1	0	None	MI	RE	SI	NONE	B	OC	0	1	0-3 ft		
11/6/2013	CON	NA	14:20:32	14:20:45	HSEA	36	345	38	1	1	None	MI	SI		NONE	G	OC	0	1	0-3 ft		
11/6/2013	CON	NA	14:24:10	14:24:34	HSEA	40	355	55	1	1	None	SW-E	SI		NONE	B	OC	0	1	0-3 ft		
11/6/2013	CON	NA	14:33:59	14:35:44	HSEA	250	350	260	1	0	Toward	SW-N	DI		NONE	B	OC	0	1	0-3 ft		
11/6/2013	CON	NA	15:19:57	15:20:08	HSEA	30	10	50	1	0	Parallel	SW-SE	DI		NONE	B	OC	0	1	0-3 ft		
11/6/2013	CON	NA	15:21:23	15:21:54	HSEA	40	180	40	1	0	None	RE	SI		NONE	B	OC	0	1	0-3 ft		
11/6/2013	CON	NA	15:24:44	15:25:09	HSEA	35	5	46	1	1	None	RE	SI		NONE	G	OC	0	1	0-3 ft		
11/6/2013	CON	V.X-55	15:30:18	15:30:30	HSEA	46	270	43	1	1	Parallel	SW-N			I	G	OC	0	1	0-3 ft		
11/6/2013	CON	V.X-55	15:35:36	15:35:46	HSEA	45	270	43	1	1	Parallel	SW-N			I	G	OC	0	1	0-3 ft		
11/6/2013	CON	V.X-55	15:38:49	15:38:58	HSEA	35	189	100	1		Toward	SW-N	DI		I	B	OC	0	1	0-3 ft		
11/6/2013	CON	V.X-55	15:46:41	15:46:56	HSEA	25	175	100	1	0	Toward	SW-N	SI		I	B	OC	0	1	0-3 ft		between strikes
11/6/2013	CON	V.X-55	15:48:31	15:48:37	HSEA	20	295	35	1	0	None	RE	SI		I	B	OC	0	1	0-3 ft		between strikes
11/6/2013	CON	V.X-55	15:52:10	15:52:16	HSEA	75	165	20	1	1	Toward	SW-N			NONE	G	OC	0	1	0-3 ft		
11/6/2013	CON	NA	16:00:59	16:01:28	HSEA	35	345	50	1	1	None	RE	SI		NONE	G	OC	0	1	0-3 ft		
11/6/2013	CON	V.X-55	16:14:10	16:14:19	HSEA	15	45	125	1	0	Toward	SW-N	SI		NONE	B	OC	0	1	0-3 ft		
11/6/2013	POST	NA	16:14:50	16:14:56	HSEA	43	270	46	1	0	None	RE			NONE	G	OC	0	1	0-3 ft		
11/8/2013	PRE	NA	8:33:56	8:35:01	HSEA	180	130	330	2	0	Away	SW-S	DI		NONE	E	OC	0	1	0-3 ft		
11/8/2013	PRE	NA	8:43:18	8:43:21	HSEA	75	282	90	1	0	None	RE	DI		NONE	E	OC	0	1	0-3 ft		
11/8/2013	CON	NA	8:44:37	8:45:12	HSEA	30	275	80	2	0	Away	MI			NONE	G	OC	0	1	0-3 ft		
11/8/2013	CON	NA	8:48:04	8:48:07	HSEA	106	320	130	1	0	Away	SW-N			NONE	G	OC	0	1	0-3 ft		
11/8/2013	CON	NA	9:15:11	9:15:17	HSEA	45	100	50	1	0	Parallel	RE			NONE	G	OC	0	1	0-3 ft		
11/8/2013	CON	NA	9:26:34	9:26:39	HSEA	175	150	220	1	0	Away	SW-S			NONE	E	OC	0	1	0-3 ft		
11/8/2013	CON	NA	9:26:47	9:26:52	HSEA	280	170	325	1	0	Toward	SW-N	RE	SI	NONE	E	OC	0	1	0-3 ft		
11/8/2013	CON	NA	9:44:13	9:44:30	HSEA	31	200	25	1	0	Parallel	SW-S			NONE	G	OC	0	1	0-3 ft		
11/8/2013	CON	NA	9:46:00	9:46:07	HSEA	45	320	55	1	0	None	LO	SI		NONE	G	OC	0	1	0-3 ft		
11/8/2013	CON	NA	9:47:47	9:47:53	HSEA	35	250	40	1	0	None	RE	SI		NONE	G	OC	0	1	0-3 ft		

Date	Event Code	Pile	Start Time	End Time	Species	Dist. To animal (m)	Dir. To animal (deg)	Dist to pile (m)	Best num of animals	Num of juv	Relative motion	Behavior 1	Behavior 2	Behavior 3	Const Type	Visi-bility	Weather	Glare (%)	BSS	Wave ht	Swell Dir	Comments
11/8/2013	CON	NA	9:51:16	9:51:40	HSEA	25	200	15	1	0	Parallel	RE	SI		NONE	G	OC	0	1	0-3 ft		
11/8/2013	CON	NA	9:57:23	9:57:30	HSEA	95	140	125	1	0	None	RE	DI		NONE	E	OC	0	1	0-3 ft		
11/8/2013	CON	NA	10:04:59	10:05:05	HSEA	65	340	90	1	0	Away	SW-N			NONE	G	OC	0	1	0-3 ft		
11/8/2013	CON	NA	10:05:07	10:05:41	HSEA	51	330	70	1	0	Away	RE	DI		NONE	G	OC	0	1	0-3 ft		
11/8/2013	CON	NA	10:17:44	10:17:54	HSEA	80	220	45	1	0	Parallel	SW-S			NONE	G	OC	0	1	0-3 ft		
11/8/2013	CON	NA	10:22:03	10:22:26	HSEA	65	160		1	0	Away	SW-W	DI		NONE	E	OC	0	1	0-3 ft		
11/8/2013	CON	NA	10:25:17	10:25:25	HSEA	27	300	27	1	0	Toward	SW-S	DI		NONE	E	OC	0	1	0-3 ft		
11/8/2013	CON	NA	10:28:15	10:28:39	HSEA	77	90	150	1	0	Parallel	SW-N	DI		NONE	E	OC	0	1	0-3 ft		same individual as 6
11/8/2013	CON	NA	10:33:50	10:34:00	HSEA	13	250	13	1	1	Away	SW-NW	SI		NONE	E	OC	0	1	0-3 ft		
11/8/2013	CON	NA	10:35:46	10:36:49	HSEA	35	275	30	1	1	None	RE	SI		NONE	E	OC	0	1	0-3 ft		
11/8/2013	CON	NA	10:39:12	10:39:19	HSEA	150	290	190	1	0	Away	SW-N			NONE	E	OC	0	1	0-3 ft		
11/8/2013	CON	NA	10:41:23	10:41:44	HSEA	51	280	60	1	0	Away	SW-NW			NONE	E	OC	0	1	0-3 ft		
11/8/2013	CON	NA	10:41:38	10:42:10	HSEA	71	45	100	1	0	None	RE	DI		NONE	E	OC	0	1	0-3 ft		
11/8/2013	CON	NA	10:50:58	10:51:11	HSEA	60	230	50	1	0	Parallel	SW-S			NONE	E	OC	0	1	0-3 ft		
11/8/2013	CON	NA	10:54:02	10:54:12	HSEA	10	275	30	1	0	Parallel	LO	MI		NONE	E	OC	0	1	0-3 ft		
11/8/2013	CON	NA	10:56:03	10:56:20	HSEA	60	270	50	1	0	None	MI	SI		NONE	E	OC	0	1	0-3 ft		
11/8/2013	CON	NA	11:01:09	11:13:37	HSEA	65	100		1	1	Toward	SW-N	DI		NONE	E	OC	0	1	0-3 ft		Observed twice, resurface 120m from boat at 45 deg.
11/8/2013	CON	NA	11:08:21	11:08:31	HSEA	375	90	300	1	0	Parallel	SW-S			NONE	E	OC	0	1	0-3 ft		
11/8/2013	CON	NA	11:16:15	11:16:34	HSEA	114	95	100	1	0	Away	SW-S			NONE	E	OC	0	1	0-3 ft		
11/8/2013	CON	NA	11:18:14	11:19:44	HSEA	100	130	125	1	0	Toward	SW-N	SI		NONE	E	OC	0	1	0-3 ft		surfaced twice during time piledriving
11/8/2013	CON	NA	11:25:54	11:25:59	HSEA	35	290	50	1	0	None	RE			NONE	E	OC	0	1	0-3 ft		
11/8/2013	CON	NA	11:30:27	11:30:31	HSEA	45	280	40	1	0	Parallel	SW-S			NONE	E	OC	0	1	0-3 ft		
11/8/2013	CON	NA	11:32:30	11:32:41	HSEA	50	300	35	1	0	Away	SW-N			NONE	E	OC	0	1	0-3 ft		
11/8/2013	CON	V.X-56	11:42:45	11:43:00	HSEA	79	45	75	2	0	None	RE	SI		V	E	OC	0	1	0-3 ft		
11/8/2013	CON	V.X-56	11:47:01	11:47:34	HSEA	40	340	50	2	0	Toward	SW-SE	SW-NE	SI	V	E	OC	0	1	0-3 ft		One swam SE while the other swam NE, the one heading NE was 20 m from observer
11/8/2013	CON	V.X-56	11:48:11	11:48:13	HSEA	103	165	200	1	0	Toward	SW-N	DI		V	E	OC	0	1	0-3 ft		
11/8/2013	CON	V.X-56	11:49:42	11:49:46	HSEA	10	350	25	1	0	Toward	SW-S	SI		V	E	OC	0	1	0-3 ft		One of the two individuals just seen
11/8/2013	CON	V.X-56	11:51:19	11:52:00	HSEA	80	45	75	2	0	Away	SW-W	DI		V	E	OC	0	1	0-3 ft		
11/8/2013	CON	V.X-56	11:54:00	11:54:29	HSEA	30	275	28	1	0	Away	SW-N	LO		V	E	OC	0	1	0-3 ft		
11/8/2013	CON	V.X-56	11:54:45	11:55:24	HSEA	125	160	225	1	0	Toward	SW-N			V	E	OC	0	1	0-3 ft		

Date	Event Code	Pile	Start Time	End Time	Species	Dist. To animal (m)	Dir. To animal (deg)	Dist to pile (m)	Best num of animals	Num of juv	Relative motion	Behavior 1	Behavior 2	Behavior 3	Const Type	Visi-bility	Weather	Glare (%)	BSS	Wave ht	Swell Dir	Comments
11/8/2013	CON	V.X-56	11:58:38	11:58:47	HSEA	65	290	55	1	0	Away	SW-NW			V	E	OC	0	1	0-3 ft		
11/8/2013	CON	V.X-56	12:03:00	12:03:29	HSEA	130	90	75	1	0	Toward	SW-N	DI		V	E	OC	0	1	0-3 ft		
11/8/2013	CON	V.X-56	12:04:43	12:04:50	HSEA	130	95	90	1	0	Toward	SW-N			V	E	OC	0	1	0-3 ft		
11/8/2013	POST	NA	12:07:02	12:08:23	HSEA	75	90	100	1	0	Parallel	SW-W	LO	DI	NONE	E	OC	0	1	0-3 ft		
11/8/2013	POST	NA	12:09:56	12:10:02	HSEA	70	345	100	1	0	Away	SW-N			NONE	E	OC	0	1	0-3 ft		
11/8/2013	POST	NA	12:24:50	12:24:54	HSEA	20	285	25	1	0	None	RE	DI		NONE	E	OC	0	1	0-3 ft		
11/9/2013	CON	NA	8:43:17	8:43:26	HSEA	50	290	50	1	1	Toward	SW-S			NONE	E	OC	0	1	0-3 ft		
11/9/2013	CON	NA	8:45:56	8:46:47	HSEA	50	340	50	1	1	None	MI	SI		NONE	E	OC	0	1	0-3 ft		
11/9/2013	PRE	NA	8:46:13	8:49:38	HSEA	400	180	450	1	0	None	LO	SI	SW-W	NONE	E	OC	0	1	0-3 ft		Dove then surfaced two minutes later swimming west
11/9/2013	CON	NA	8:56:25	8:56:38	HSEA	60	340	60	1	1	Away	SW-E	SI		NONE	E	OC	0	1	0-3 ft		
11/9/2013	CON	NA	9:12:49	9:12:56	HSEA	80	180	70	1	0	Toward	SW-N	SP		NONE	E	OC	0	1	0-3 ft		
11/9/2013	CON	NA	9:15:57	9:16:22	HSEA	100	340	120	1	0	Parallel	SW-E	DI		NONE	E	OC	0	1	0-3 ft		
11/9/2013	CON	NA	9:23:08	9:23:18	HSEA	60	0	100	1	1	Parallel	SW-E	SI		NONE	E	OC	0	1	0-3 ft		
11/9/2013	CON	NA	9:29:21	9:30:16	HSEA	255	180		1	0	Parallel	SW-E			NONE	E	OC	0	1	0-3 ft		
11/9/2013	CON	NA	9:34:35	9:34:40	HSEA	80	82	190	1	0	Parallel	SW-N	DI		NONE	E	OC	0	1	0-3 ft		
11/9/2013	CON	NA	9:35:30	9:35:46	HSEA	100	318	60	1	0	None	RE			NONE	E	OC	0	1	0-3 ft		
11/9/2013	CON	NA	9:47:43	9:55:05	CASL	1050	190		1	0	Parallel	SW-E			NONE	E	OC	0	1	0-3 ft		Good view of package also/at least two large Stellars. CASL seemed to be foraging, birds following animal
11/9/2013	CON	NA	10:08:45	10:09:01	HSEA	150	140	150	1	1	Parallel	SW-E	DI		NONE	E	OC	0	1	0-3 ft		
11/9/2013	CON	NA	10:14:00	10:14:29	HSEA	70	298	40	1	0	Parallel	SW-E	DI		NONE	E	OC	0	1	0-3 ft		
11/9/2013	CON	Temp-2	10:17:38	10:17:50	HSEA	65	298	40	1	0	Toward	SW-N	DI		V	E	OC	0	1	0-3 ft		
11/9/2013	CON	NA	10:22:04	10:22:31	HSEA	150	332	120	1	0	Parallel	SW-W	DI		NONE	E	OC	0	1	0-3 ft		
11/9/2013	CON	NA	10:25:20	10:25:29	HSEA	80	260	55	1	0	Away	SW-S	DI		NONE	E	OC	0	1	0-3 ft		
11/9/2013	CON	NA	10:26:34	10:26:48	HSEA	27	90	5	1	0	Away	SW-S	DI		NONE	E	OC	0	1	0-3 ft		The pile was being placed inside L-34 at the time of the sighting; seal swimming toward L-34
11/9/2013	CON	NA	10:31:53	10:32:01	HSEA	70	334	70	1	0	Away	SW-E	DI		NONE	E	OC	0	1	0-3 ft		
11/9/2013	CON	Temp-3	10:35:47	10:35:58	HSEA	25	260	95	1	0	None	LO	SI		V	E	OC	0	1	0-3 ft		
11/9/2013	CON	NA	10:36:22	10:36:29	HSEA	150	274	110	1	0	Away	SW-S	DI		NONE	E	OC	0	1	0-3 ft		
11/9/2013	CON	NA	10:49:10	10:49:15	HSEA	110	344	90	1	0	None	RE	DI		NONE	E	OC	0	1	0-3 ft		

Date	Event Code	Pile	Start Time	End Time	Species	Dist. To animal (m)	Dir. To animal (deg)	Dist to pile (m)	Best num of animals	Num of juv	Relative motion	Behavior 1	Behavior 2	Behavior 3	Const Type	Visi-bility	Weather	Glare (%)	BSS	Wave ht	Swell Dir	Comments
11/9/2013	CON	NA	10:50:55	10:51:20	HSEA	65	165	80	1	0	Parallel	SW-W	DI		NONE	E	OC	0	1	0-3 ft		18 m south of L-32 where the pile was being lowered down into for storafe
11/9/2013	CON	NA	10:51:34	10:52:44	HSEA	125	150	100	1	1	None	RE			NONE	E	OC	0	1	0-3 ft		
11/9/2013	CON	NA	10:57:41	10:58:03	HSEA	120	180	170	1	0	None	LO	SI		NONE	E	OC	0	1	0-3 ft		NOSE UP FOR ONE SECOND
11/9/2013	CON	NA	11:00:12	11:00:15	HSEA	10	90	18	1	0	Away	UN			NONE	E	OC	0	1	0-3 ft		It did a flip just under the water surface
11/9/2013	CON	Temp-4	11:01:53	11:02:46	HSEA	100	350	90	1	0	None	RE	DI		V	E	OC	0	1	0-3 ft		
11/9/2013	CON	Temp-4	11:02:16	11:02:21	HSEA	100	190	175	1	0	None	LO	SI		V	E	OC	0	1	0-3 ft		
11/9/2013	CON	Temp-4	11:10:20	11:10:25	HSEA	110	350	80	1	0	Away	SW-E	DI		V	E	OC	0	1	0-3 ft		
11/9/2013	CON	NA	11:15:31	11:17:12	HSEA	220	190	245	1	0	None	LO	RE	SI	NONE	E	OC	0	1	0-3 ft		
11/9/2013	CON	NA	11:20:03	11:20:14	HSEA	120	340	105	1	0	Away	SW-N			NONE	E	OC	0	1	0-3 ft		
11/9/2013	CON	NA	13:46:49	13:47:37	HSEA	20	110		1	1	None	RE			NONE	E	OC	0	1	0-3 ft		
11/9/2013	CON	NA	13:57:05	13:57:29	HSEA	10	190		1	1	None	LO	RE	SI	NONE	E	OC	0	1	0-3 ft		
11/9/2013	CON	TEMP-4	14:01:54	14:02:23	HSEA	10	180	40	1	1	None	RE	SI		NONE	E	OC	0	1	0-3 ft		
11/9/2013	CON	TEMP-1	14:04:11	14:04:37	HSEA	60	180	90	1	1	Parallel	SW-W	DI		NONE	E	OC	0	1	0-3 ft		
11/9/2013	CON	TEMP-1	14:06:25	14:06:33	HSEA	20	185	30	1	1	None	RE	SI		NONE	E	OC	0	1	0-3 ft		
11/9/2013	CON	TEMP-4	14:15:20	14:15:46	HSEA	60	180	70	1	0	Parallel	RE	DI		NONE	E	OC	0	1	0-3 ft		
11/9/2013	CON	TEMP-4	14:17:42	14:18:03	HSEA	10	190	60	1	1	Parallel	SW-E	DI		NONE	E	OC	0	1	0-3 ft		
11/9/2013	CON	NA	14:25:19	14:25:26	HSEA	30	0		1	0	None	SW-S			NONE	E	OC	0	1	0-3 ft		
11/9/2013	CON	NA	15:08:03	15:08:10	HSEA	90	160	100	1	0	None	RE	DI		NONE	E	OC	0	1	0-3 ft		
11/9/2013	CON	NA	15:12:13	15:12:27	HSEA	70	165	80	1	0	None	RE	SI		NONE	E	OC	0	1	0-3 ft		
11/9/2013	CON	NA	15:12:17	15:12:22	HSEA	110	200	170	1	0	None	FL	SI		NONE	E	OC	0	1	0-3 ft		
11/9/2013	CON	NA	15:19:34	15:19:39	HSEA	225	180	285	2	0	Parallel	SW-W	DI		NONE	E	OC	0	1	0-3 ft		
11/9/2013	CON	NA	15:21:31	15:22:34	HSEA	250	190	310	1	0	None	LO	DI	MI	NONE	E	OC	0	1	0-3 ft		
11/9/2013	CON	NA	15:25:40	15:25:43	HSEA	503	170	563	1	0	Parallel	SW-W	DI		NONE	E	OC	0	1	0-3 ft		
11/9/2013	CON	TEMP-1	15:32:33	15:32:35	HSEA	15	120	20	1	0	Toward	SW-NW	SI		NONE	E	OC	0	1	0-3 ft		NW corner
11/9/2013	CON	Temp-1	15:40:00	15:40:05	HSEA	430	165	455	1	0	Parallel	MI	DI		V	E	OC	0	1	0-3 ft		
11/9/2013	CON	TEMP-1	15:43:46	15:43:48	HSEA	25	120	30	1	0	None	MI	DI		NONE	E	OC	0	1	0-3 ft		
11/9/2013	CON	NA	15:51:49	15:52:19	HSEA	25	325	100	1		None	RE	DI		NONE	E	OC	0	1	0-3 ft		
11/9/2013	CON	NA	15:53:54	15:54:14	HSEA	22	320	95	1		None	MI	DI		NONE	E	OC	0	1	0-3 ft		
11/9/2013	CON	TEMP-2	15:55:26	15:55:30	HSEA	60	45	60	1	0	Parallel	SW-SE	DI		NONE	E	OC	0	1	0-3 ft		
11/9/2013	CON	NA	15:55:32	15:56:11	HSEA	70	140	70	1		Away	SW-SE	DI		NONE	E	OC	0	1	0-3 ft		

Date	Event Code	Pile	Start Time	End Time	Species	Dist. To animal (m)	Dir. To animal (deg)	Dist to pile (m)	Best num of animals	Num of juv	Relative motion	Behavior 1	Behavior 2	Behavior 3	Const Type	Visi-bility	Weather	Glare (%)	BSS	Wave ht	Swell Dir	Comments
11/9/2013	CON	NA	15:55:53	15:56:14	HSEA	15	290	75	1	0	None	LO	SI		NONE	E	OC	0	1	0-3 ft		
11/9/2013	CON	NA	15:58:33	15:59:04	HSEA	103	135	95	1		Away	RE	SI		NONE	E	OC	0	1	0-3 ft		
11/9/2013	CON	TEMP-2	16:02:47	16:04:18	HSEA	70	170	65	1	0	None	RE	SI	MI	NONE	E	OC	0	1	0-3 ft		
11/9/2013	CON	NA	16:04:45	16:05:14	HSEA	200	160	185	1		Parallel	SW-E			NONE	E	OC	0	1	0-3 ft		
11/9/2013	CON	TEMP-2	16:05:34	16:05:38	HSEA	100	135	90	1	0	None	RE	DI		NONE	E	OC	0	1	0-3 ft		
11/9/2013	CON	TEMP-2	16:06:33	16:06:34	HSEA	80	170	70	1	0	Toward	RE			NONE	E	OC	0	1	0-3 ft		
11/9/2013	CON	NA	16:09:46	16:10:05	HSEA	65	260	35	1	0	None	RE	DI		NONE	E	OC	0	1	0-3 ft		
11/9/2013	CON	Temp-2	16:10:19	16:10:27	HSEA	92	135	75	1		Toward	SW-N	DI		V	E	OC	0	1	0-3 ft		
11/9/2013	CON	NA	16:12:00	16:12:10	HSEA	117	135	95	1		Toward	SW-N	DI		NONE	E	OC	0	1	0-3 ft		
11/9/2013	CON	NA	16:12:46	16:12:57	HSEA	65	290	70	1	0	None	RE	DI		NONE	E	OC	0	1	0-3 ft		
11/9/2013	CON	TEMP-2	16:13:40	16:13:44	HSEA	10	190	15	1	0	Parallel	SW-W	DI		NONE	E	OC	0	1	0-3 ft		SW corner
11/9/2013	CON	NA	16:14:36	16:14:52	HSEA	50	255	30	1	0	Away	SW-N	DI		NONE	E	L	0	1	0-3 ft		
11/9/2013	CON	TEMP-2	16:15:18	16:15:20	HSEA	20	230	35	1	0	None	RE	DI		NONE	E	OC	0	1	0-3 ft		
11/9/2013	CON	NA	16:19:35	16:19:48	HSEA	39	150	50	1		None	MI	DI		NONE	E	OC	0	1	0-3 ft		
11/9/2013	CON	TEMP-3	16:21:49	16:22:05	HSEA	80	45	80	1	0	Toward	SW-SW	SI		NONE	E	OC	0	1	0-3 ft		SE CORNER
11/9/2013	CON	NA	16:22:27	16:22:41	HSEA	12	295	90	1	0	None	LO	SI		NONE	E	L	0	1	0-3 ft		
11/9/2013	CON	Temp-3	16:27:45	16:28:13	HSEA	140	180	150	1	1	None	RE	DI		V	E	OC	0	1	0-3 ft		
11/9/2013	CON	TEMP-3	16:28:11	16:28:34	HSEA	60	180	60	1	0	Parallel	SW-W			NONE	E	OC	0	1	0-3 ft		
11/9/2013	CON	Temp-3	16:28:19	16:28:55	HSEA	70	170	70	1		Away	SW-SW			V	E	OC	0	1	0-3 ft		
11/9/2013	CON	TEMP-3	16:30:26	16:30:42	HSEA	45	170	40	1	0	Toward	SW-N			NONE	E	OC	0	1	0-3 ft		
11/9/2013	POST	NA	16:32:44	16:33:17	HSEA	73	160	73	1		Toward	SW-N			NONE	E	OC	0	1	0-3 ft		
11/9/2013	POST	NA	16:34:06	16:34:18	HSEA	40	120	30	1	1	Away	RE	DI		NONE	E	OC	0	1	0-3 ft		
11/9/2013	POST	TEMP-3	16:35:36	16:36:15	HSEA	100	135	100	1	0	Toward	SW-NE			NONE	E	OC	0	1	0-3 ft		
11/9/2013	POST	NA	16:35:58	16:36:13	HSEA	70	150	50	1	1	Away	RE			NONE	E	OC	0	1	0-3 ft		
11/9/2013	POST	NA	16:38:05	16:38:20	HSEA	80	312	120	1	0	None	RE	DI		NONE	G	L	0	1	0-3 ft		
11/9/2013	POST	NA	16:44:00	16:44:23	HSEA	100	150	120	1	0	Toward	SW-N	DI		NONE	G	L	0	1	0-3 ft		
11/9/2013	POST	NA	16:46:11	16:46:36	HSEA	90	94	20	1	0	Toward	SW-N	DI		NONE	G	L	0	1	0-3 ft		
11/11/2013	PRE	NA	7:59:47	8:00:20	HSEA	4	80	100	1	0	Away	SW-N	DI		NONE	E	PC	0	1	0-3 ft		
11/11/2013	PRE	NA	8:14:18	8:14:34	HSEA	10	180	60	1	0	None	SW-E	DI		NONE	E	PC	0	1	0-3 ft		
11/11/2013	PRE	NA	8:17:07	8:17:18	HSEA	160	0	80	1	0	None	SW-W	DI		NONE	E	PC	0	1	0-3 ft		

Date	Event Code	Pile	Start Time	End Time	Species	Dist. To animal (m)	Dir. To animal (deg)	Dist to pile (m)	Best num of animals	Num of juv	Relative motion	Behavior 1	Behavior 2	Behavior 3	Const Type	Visi-bility	Weather	Glare (%)	BSS	Wave ht	Swell Dir	Comments
11/11/2013	CON	NA	8:25:17	8:25:27	HSEA	50	100		1	0	Parallel	SW-SE	DI		NONE	E	PC	0	1	0-3 ft		
11/11/2013	CON	NA	8:34:44	8:34:46	HSEA	15	50		1	0	Toward	SW-SE	DI		NONE	E	PC	5	1	0-3 ft		
11/11/2013	CON	NA	9:11:00	9:11:13	HSEA	120	150		1	0	None	RE	SI		NONE	E	PC	5	1	0-3 ft		
11/11/2013	CON	NA	9:14:01	9:14:15	HSEA	110	150		1	0	Parallel	SW-W	DI		NONE	E	PC	5	1	0-3 ft		
11/11/2013	CON	NA	9:30:47	9:30:58	HSEA	50	120	43	1	0	Toward	SW-S			NONE	E	PC	5	1	0-3 ft		
11/11/2013	CON	NA	9:32:28	9:32:32	HSEA	50	90	45	1	0	None	RE	SI		NONE	E	PC	5	1	0-3 ft		
11/11/2013	CON	NA	9:47:04	9:47:12	HSEA	55	150	65	1	0	Away	SW-S			NONE	E	PC	5	1	0-3 ft		
11/11/2013	CON	NA	9:50:39	9:51:02	HSEA	60	150	68	1	0	None	RE			NONE	E	PC	5	1	0-3 ft		
11/11/2013	CON	NA	10:05:17	10:05:30	HSEA	70	150		1	0	Away	RE			NONE	E	PC	5	1	0-3 ft		
11/11/2013	CON	NA	10:06:09	10:06:17	HSEA	50	140	50	1	0	None	SW-N			NONE	E	PC	5	1	0-3 ft		
11/11/2013	CON	NA	10:08:00	10:08:09	HSEA	100	150	60	2	0	None	RE			NONE	E	PC	5	1	0-3 ft		
11/11/2013	CON	NA	10:20:06	10:20:15	HSEA	45	160	55	1	0	Toward	SW-N			NONE	E	PC	5	1	0-3 ft		
11/11/2013	CON	NA	10:26:43	10:28:10	HSEA	122	45	20	1	0	None	RE			NONE	E	PC	5	1	0-3 ft		
11/11/2013	CON	NA	11:32:26	11:35:20	HSEA	110	140		1	1	Parallel	SW-NW	DI		NONE	E	PC	0	1	0-3 ft		
11/11/2013	CON	NA	11:41:02	11:43:40	HSEA	100	90		1	1	Toward	SW-SW	DI	SW-NW	NONE	E	PC	0	1	0-3 ft		
11/11/2013	CON	NA	11:47:11	11:47:12	HSEA	300	150		1	0	Parallel	SW-W	DI		NONE	E	PC	5	1	0-3 ft		
11/11/2013	CON	NA	11:53:00	11:53:06	HSEA	120	30		1	0	None	LO	SI		NONE	E	PC	5	1	0-3 ft		
11/11/2013	CON	NA	12:04:03	12:07:30	HSEA	80	60		1	0	Toward	SW-N	DI		NONE	E	PC	5	1	0-3 ft		
11/11/2013	CON	NA	12:10:23	12:11:19	CASL	100	130		1	0	Away	TR-S	DI		NONE	E	PC	5	1	0-3 ft		
11/11/2013	CON	NA	12:14:33	12:14:44	HSEA	90	100		1	0	Toward	SW-N	DI		NONE	E	PC	5	1	0-3 ft		
11/11/2013	CON	NA	12:17:18	12:20:10	HSEA	80	90		1	0	Toward	SW-N	DI		NONE	E	PC	5	1	0-3 ft		
11/11/2013	CON	NA	12:24:09	12:24:30	HSEA	80	100		1	0	Toward	SW-N	DI		NONE	E	PC	5	1	0-3 ft		
11/11/2013	CON	NA	12:31:03	12:31:16	HSEA	100	110		1	0	None	SW-N	DI		NONE	E	PC	5	1	0-3 ft		
11/11/2013	CON	NA	12:38:03	12:38:14	HSEA	300	160		1	0	Toward	SW-E	DI		NONE	E	PC	5	1	0-3 ft		
11/11/2013	CON	NA	12:39:40	12:39:41	HSEA	90	70		1	1	None	SW-S	DI		NONE	E	PC	5	1	0-3 ft		
11/11/2013	CON	NA	12:46:01	12:46:06	HSEA	80	50		1	0	None	LO	SI		NONE	E	PC	5	1	0-3 ft		
11/11/2013	CON	NA	12:47:34	12:47:45	CASL	80	60		2	0	Toward	TR-N	DI		NONE	E	PC	5	1	0-3 ft		
11/11/2013	CON	NA	13:04:07	13:04:10	HSEA	70	90		1	0	Away	SW-S	DI		NONE	E	PC	5	1	0-3 ft		

Date	Event Code	Pile	Start Time	End Time	Species	Dist. To animal (m)	Dir. To animal (deg)	Dist to pile (m)	Best num of animals	Num of juv	Relative motion	Behavior 1	Behavior 2	Behavior 3	Const Type	Visi-bility	Weather	Glare (%)	BSS	Wave ht	Swell Dir	Comments
11/11/2013	CON	NA	14:11:03	14:11:10	HSEA	20	90		1	1	Toward	SW-N	DI		NONE	E	S	5	1	0-3 ft		
11/11/2013	CON	NA	14:14:05	14:14:16	HSEA	110	350		1	0	Toward	SW-N			NONE	E	S	5	1	0-3 ft		
11/11/2013	CON	m-27	14:19:17	14:19:21	HSEA	70	90	70	1	1	None	LO	SI		NONE	E	OC	0	1	0-3 ft		
11/11/2013	CON	NA	14:50:41	14:50:52	HSEA	80	260		1	0	Away	SW-SW	DI		NONE	E	S	5	1	0-3 ft		
11/11/2013	CON	V.X-56	15:04:40	15:04:51	HSEA	70	320	100	1	0	Toward	SW-SE	DI		I	E	S	10	1	0-3 ft		
11/11/2013	CON	V.X-56	15:17:16	15:17:54	HSEA	60	340	20	1	0	None	LO	DI		NONE	E	S	10	1	0-3 ft		Stopped driving temporarily until seal moved out of from shutdown zone
11/11/2013	CON	NA	15:27:30	15:28:10	HSEA	20	270		1	0	Toward	RE	DI		NONE	E	S	10	1	0-3 ft		
11/11/2013	CON	J-27	15:30:10	15:30:41	HSEA	55	250	15	1	0	None	LO	DI		V	E	PC	0	1	0-3 ft		
11/11/2013	CON	NA	15:36:11	15:38:04	HSEA	40	25		1	0	Toward	SW-SW	DI		NONE	E	PC	0	1	0-3 ft		
11/11/2013	CON	NA	15:50:09	15:50:12	HSEA	70	220		1	0	None	LO	DI		NONE	E	PC	0	1	0-3 ft		
11/11/2013	POST	NA	16:19:51	16:20:00	HSEA	30	160		1	0	Toward	SW-NW	DI		NONE	G	PC	0	1	0-3 ft		
11/11/2013	POST	NA	16:26:16	16:26:21	HSEA	40	90		1	0	Toward	SW-N	DI		NONE	G	PC	0	1	0-3 ft		
11/12/2013	CON	NA	8:52:21	8:53:40	HSEA	30	60		1	0	None	RE	SI		NONE	M	R	0	1	0-3 ft		
11/12/2013	CON	NA	9:11:01	9:11:06	HSEA	90	110		1	0	None	LO	SI		NONE	M	R	0	1	0-3 ft		
11/12/2013	CON	NA	9:57:33	9:57:38	HSEA	120	80	30	1	0	Away	SW-S	DI		NONE	M	R	0	1	0-3 ft		
11/12/2013	CON	NA	10:28:21	10:28:31	HSEA	100	120	120	1	0	None	RE	DI		NONE	M	R	0	1	0-3 ft		
11/12/2013	CON	NA	10:49:52	10:49:54	HSEA	85	90		1	1	None	LO	SI		NONE	M	PC	10	1	0-3 ft		
11/12/2013	CON	NA	11:31:01	11:32:24	HSEA	100	180		1	0	None	LO	SI		NONE	M	PC	10	1	0-3 ft		
11/12/2013	CON	NA	11:45:00	11:46:02	HSEA	40	70		1	1	None	RE	SI		NONE	M	PC	10	1	0-3 ft		
11/12/2013	CON	NA	13:21:52	13:21:58	HSEA	15	90	120	1	0	None	LO	SI		NONE	G	PC	10	1	0-3 ft		
11/12/2013	CON	NA	13:51:46	13:51:47	HSEA	70	90		1	0	None	LO	DI		NONE	G	PC	0	1	0-3 ft		
11/12/2013	CON	N-31	14:03:55	14:03:59	HSEA	41	225	24	1	1	None	LO	SI		NONE	E	PC	10	1	0-3 ft		
11/12/2013	CON	N-31	14:06:29	14:06:40	HSEA	15	180	230	1	0	None	LO	SI		SSI	G	PC	10	1	0-3 ft		
11/12/2013	CON	N-31	14:07:48	14:07:59	HSEA	40	200	40	1	1	None	LO			SSI	E	PC	1	1	0-3 ft		
11/12/2013	MS	N-31	14:13:46	14:13:49	HSEA	5	270	25	1	1	Away	SW-W	DI		NONE	E	PC	10	1	0-3 ft		Shutdown to confirm distance of animal to pile.
11/12/2013	MS	N-31	14:17:35	14:17:27	HSEA	2	270	25	1	1	Away	SW-N	DI		NONE	E	PC	10	1	0-3 ft		Confirmed seal observed outside SD zone, resumed pile driving
11/12/2013	CON	NA	14:29:06	14:29:17	HSEA	30	90		1	0	Away	SW-W	DI		NONE	G	PC	10	1	0-3 ft		
11/12/2013	CON	NA	14:32:41	14:33:00	HSEA	80	60		1	0	Away	SW-NW	DI		NONE	G	PC	10	1	0-3 ft		
11/12/2013	CON	NA	14:40:02	14:40:08	HSEA	25	225	25	1	1	Away	SW-W	DI		NONE	E	PC	10	1	0-3 ft		

Date	Event Code	Pile	Start Time	End Time	Species	Dist. To animal (m)	Dir. To animal (deg)	Dist to pile (m)	Best num of animals	Num of juv	Relative motion	Behavior 1	Behavior 2	Behavior 3	Const Type	Visi-bility	Weather	Glare (%)	BSS	Wave ht	Swell Dir	Comments
11/12/2013	CON	N-32	14:49:30	14:49:43	HSEA	25	0	50	1	1	Toward	SW-S	DI		I	E	PC	10	1	0-3 ft		
11/12/2013	CON	N-32	14:51:28	14:56:38	HSEA	25	0	50	1	1	None	MI	DI		I	E	PC	10	1	0-3 ft		same aminal as #5. animal was milling an diving repeatedly, surfacing 3 times in the observation time.
11/12/2013	CON	NA	15:02:22	15:02:24	HSEA	40	315	65	2	2	Toward	DI	SW-S		NONE	E	PC	10	1	0-3 ft		
11/12/2013	CON	NA	15:03:00	15:03:05	HSEA	90	60		2	0	Away	SW-NE	DI		NONE	G	PC	10	1	0-3 ft		
11/12/2013	CON	NA	15:11:26	15:12:01	HSEA	20	0	50	1	1	Away	SW-N	DI		NONE	E	PC	10	1	0-3 ft		
11/12/2013	CON	NA	15:13:32	15:13:39	HSEA	30	315	60	2	2	Parallel	SW-SW			NONE	E	PC	10	1	0-3 ft		
11/12/2013	CON	NA	15:21:22	15:21:29	HSEA	10	315	20	1	1	None	LO	DI		NONE	E	PC	10	1	0-3 ft		
11/12/2013	CON	N-34	15:24:13	15:24:24	HSEA	10	315	30	1	1	None	LO	DI		I	E	PC	10	1	0-3 ft		
11/12/2013	CON	N-34	15:27:26	15:27:41	HSEA	50	45	70	1	1	None	DI	SW-W		I	E	PC	10	1	0-3 ft		
11/12/2013	CON	NA	15:34:24	15:34:41	HSEA	5	270	7	1	1	None	DI	LO		NONE	E	PC	10	1	0-3 ft		
11/12/2013	CON	NA	15:36:28	15:36:36	HSEA	2	0	25	1	1	None	DI	LO		NONE	E	PC	10	1	0-3 ft		
11/12/2013	CON	NA	15:38:32	15:38:40	HSEA	20	45	25	2	2	Parallel	DI	LO	SW-SW	NONE	E	PC	10	1	0-3 ft		
11/12/2013	CON	NA	15:45:26	15:45:58	HSEA	30	180		2	1	Parallel	RE	SW-E		NONE	G	PC	10	1	0-3 ft		
11/12/2013	CON	NA	15:46:17	15:47:07	HSEA	20	315	24	1	0	None	LO	DI		NONE	E	PC	10	1	0-3 ft		
11/12/2013	CON	NA	15:50:22	15:53:09	HSEA	30	315	30	1	1	None	DI	LO		NONE	E	PC	10	1	0-3 ft		
11/12/2013	CON	N-35	15:55:11	15:55:42	HSEA	100	70	40	1	1	Parallel	SW-E	DI		NONE	G	PC	0	1	0-3 ft		
11/12/2013	CON	N-35	15:59:14	15:59:17	HSEA	40	45	45	1	0	Toward	DI	LO	SW-SW	NONE	E	PC	10	1	0-3 ft		
11/12/2013	CON	NA	16:07:20	16:07:56	HSEA	30	315	30	1	0	Toward	DI	LO		NONE	E	PC	10	1	0-3 ft		
11/12/2013	CON	N-33	16:18:30	16:18:35	HSEA	50	225	30	1	0	Away	SW-SW	DI		I	E	PC	10	1	0-3 ft		
11/12/2013	CON	N-33	16:20:23	16:20:33	HSEA	80	90	40	1	0	Toward	SW-S			I	G	PC	0	1	0-3 ft		
11/12/2013	POST	N-33	16:36:09	16:36:10	HSEA	80	340		1	0	Away	SW-N			NONE	G	PC	0	1	0-3 ft		
11/13/2013	PRE	NA	8:04:19	8:10:16	HSEA	80	20	20	1	1	None	RE	DI		NONE	E	PC	0	1	0-3 ft		
11/13/2013	PRE	NA	8:09:45	8:10:21	HSEA	25	180	50	1	0	None	LO			NONE	E	PC	0	1	0-3 ft		
11/13/2013	PRE	NA	8:29:14	8:29:22	HSEA	70	280	65	1	1	None	RE			NONE	E	PC		1	0-3 ft		
11/13/2013	PRE	VX-48	8:31:01	8:31:06	HSEA	130	160	130	1	0	Parallel	SW-S			NONE	E	PC	0	1	0-3 ft		
11/13/2013	CON	VX-48	8:47:03	8:49:35	HSEA	81	90	80	1	0	Away	SW-S	DI		V	E	PC	0	1	0-3 ft		First sited moments before vibing began, dove, the resuraced in same trajectory
11/13/2013	CON	VX-48	9:03:38	9:03:59	HSEA	50	270	75	1	0	Parallel	SW-E			NONE	E	PC	0	1	0-3 ft		47.7514 122.72414
11/13/2013	CON	VX-48	9:11:48	9:13:03	HSEA	75	170	175	1	0	Parallel	SW-N			NONE	E	PC	0	1	0-3 ft		

Date	Event Code	Pile	Start Time	End Time	Species	Dist. To animal (m)	Dir. To animal (deg)	Dist to pile (m)	Best num of animals	Num of juv	Relative motion	Behavior 1	Behavior 2	Behavior 3	Const Type	Visi-bility	Weather	Glare (%)	BSS	Wave ht	Swell Dir	Comments
11/13/2013	CON	NA	9:54:17	9:54:38	HSEA	55	90	40	1	0	Away	RE			NONE	E	PC	0	1	0-3 ft		
11/13/2013	CON	NA	10:10:48	10:11:12	HSEA	45	10	33	1	0	None	RE	SI		NONE	E	PC	0	1	0-3 ft		
11/13/2013	CON	NA	10:20:21	10:20:38	HSEA	100	170	200	1	0	Away	SW-S			NONE	E	PC	0	1	0-3 ft		
11/13/2013	CON	NA	10:27:00	10:27:36	HSEA	100	180	180	1	0	None	RE			NONE	E	PC	0	1	0-3 ft		
11/13/2013	CON	NA	10:32:24	10:32:57	HSEA	100	90	70	1	0	None	RE			NONE	E	PC	0	1	0-3 ft		
11/13/2013	CON	NA	10:38:38	10:39:13	HSEA	25	90	75	1	0	None	RE			NONE	E	PC	0	1	0-3 ft		
11/13/2013	CON		10:47:55	10:48:20	HSEA	30	160	10	1	0	Toward	RE	DI		NONE	E	PC	10	1	0-3 ft		
11/13/2013	CON	J-27	11:01:06	11:01:09	HSEA	100	5	100	1	0	None	RE			SSI	E	PC	0	1	0-3 ft		
11/13/2013	CON	J-27	11:04:33	11:04:57	HSEA	150	180	150	1	0	Away	SW-S			I	E	PC	0	1	0-3 ft		
11/13/2013	CON	NA	11:08:44	11:08:55	HSEA	200	90	300	2	0	Away	SW-S	DI		NONE	E	PC	0	1	0-3 ft		
11/13/2013	CON	NA	11:11:19	11:11:22	HSEA	50	270	100	1	0	None	RE			NONE	E	PC	0	1	0-3 ft		
11/13/2013	CON	J-27	11:16:07	11:16:17	HSEA	25	190	15	1	0	Away	SW-W			NONE	E	PC	10	1	0-3 ft		
11/13/2013	CON	NA	11:19:29	11:19:58	HSEA	50	90	100	1	0	Away	SW-S			NONE	E	PC	0	1	0-3 ft		Impact started moments after sighting
11/13/2013	CON	NA	11:32:48	11:33:07	HSEA	150	45	200	1	0	Away	SW-S			NONE	E	PC	0	1	0-3 ft		
11/13/2013	CON	NA	11:36:20	11:36:35	HSEA	70	90	100	1	0	Toward	SW-N			NONE	E	PC	0	1	0-3 ft		
11/13/2013	CON	NA	11:48:45	11:48:46	HSEA	15	10	150	1	0	None	LO	DI		NONE	E	PC	0	1	0-3 ft		
11/13/2013	CON	R-27	11:53:22	11:53:28	HSEA	50	260	70	1	0	Toward	SW-E			I	E	OC	0	1	0-3 ft		
11/13/2013	CON	R-27	11:55:06	11:55:26	HSEA	70	250	90	1	0	Away	SW-S			I	E	PC	0	1	0-3 ft		
11/12/2013	CON	N-31	14:13:59	14:14:22	HSEA	20	270	15	1	1	Toward	LO	SW-E		NONE	E	PC	1	1	0-3 ft		
11/13/2013	CON	NA	14:30:28	14:30:47	HSEA	5	275	30	1	0	Toward	MI			NONE	E	PC	10	1	0-3 ft		
11/13/2013	CON	TT-1	14:51:45	14:52:00	HSEA	25	170	50	1	0	Toward	SW-SE	DI		V	E	PC	0	1	0-3 ft		
11/13/2013	CON	NA	14:58:37	14:59:09	HSEA	70	165	50	1	0	None	LO			NONE	E	PC	0	1	0-3 ft		
11/13/2013	CON	NA	15:09:00	15:09:17	HSEA	50	0	150	1	0	None	RE			NONE	E	PC	0	1	0-3 ft		batter pile
11/13/2013	MS	TT-1	15:10:40	15:11:56	HSEA	30	210	8	1	0	Toward	SW-NE			NONE	E	PC	10	1	0-3 ft		Shutdown when animal surfaced in to zone. Resumed work after sighting animal outside zone.
11/13/2013	CON	NA	15:11:07	15:11:20	HSEA	15	0	50	1	0	None	LO	SI		NONE	E	PC	0	1	0-3 ft		
11/13/2013	CON	V.X-48	15:13:44	15:13:53	HSEA	100	110	150	1	0	Toward	SW-N			SSI	E	PC	0	1	0-3 ft		
11/13/2013	CON	VX-48	15:22:14	15:22:20	HSEA	80	280	70	1	0	None	MI			I	E	OC	0	1	0-3 ft		
11/13/2013	CON	V.X-48	15:27:20	15:29:40	HSEA	50	100	70	1	0	Parallel	SW-N			I	E	PC	0	1	0-3 ft		dipped under for a bit an resurfacd 100m NE
11/13/2013	CON	V.X-48	15:32:25	15:33:13	HSEA	30	270	150	1	0	None	LO	SW-NW		I	E	PC	0	1	0-3 ft		
11/13/2013	CON	TT-1	15:47:03	15:47:04	HSEA	5	275	15	1	1	Away	SW-E	DI		NONE	E	PC	10	1	0-3 ft		
11/14/2013	PRE	NA	8:37:34	8:37:51	HSEA	67	0		1	0	None	LO			NONE	G	OC	0	1	0-3 ft		

Date	Event Code	Pile	Start Time	End Time	Species	Dist. To animal (m)	Dir. To animal (deg)	Dist to pile (m)	Best num of animals	Num of juv	Relative motion	Behavior 1	Behavior 2	Behavior 3	Const Type	Visi-bility	Weather	Glare (%)	BSS	Wave ht	Swell Dir	Comments
11/14/2013	PRE	NA	8:41:01	8:41:16	HSEA	350	0		1	0	None	DI			NONE	G	OC	0	1	0-3 ft		Likely same animal as sighting 1
11/14/2013	CON	NA	8:48:55	8:49:09	HSEA	110	350		1	0	None	LO			NONE	G	OC	0	1	0-3 ft		
11/14/2013	CON	NA	9:03:32	9:04:10	CASL	200	200		1	0	Away	TR-SW			NONE	G	OC	0	1	0-3 ft		
11/14/2013	CON	NA	9:14:29	9:14:48	HSEA	10	270		1	0	None	RE	SI		NONE	G	OC	0	1	0-3 ft		
11/14/2013	CON	NA	10:16:25	10:16:41	HSEA	40	180	150	1	0	None	MI	DI		NONE	G	OC	0	1	0-3 ft		
11/14/2013	CON	NA	10:36:43	10:37:01	HSEA	25	330	40	1	0	Parallel	SW-N	DI		NONE	G	OC	0	1	0-3 ft		
11/14/2013	CON	NA	12:23:50	12:24:12	HSEA	200	165		1	0	Away	SW-S	SI		NONE	E	OC	0	1	0-3 ft		
11/14/2013	CON	NA	12:24:14	12:24:21	HSEA	50	70		1		Away	SW-S	SI		NONE	E	OC	0	1	0-3 ft		
11/14/2013	CON	NA	12:26:50	12:27:02	HSEA	220	165		1	0	Away	SW-SW	DI		NONE	E	OC	0	1	0-3 ft		
11/14/2013	CON	NA	12:37:50	12:37:53	HSEA	35	80	200	1	0	Parallel	SW-N	DI		NONE	E	OC	0	1	0-3 ft		
11/14/2013	CON	NA	12:40:13	12:40:21	HSEA	80	90		1	0	None	RE	SI		NONE	E	OC	0	1	0-3 ft		
11/14/2013	CON	NA	12:42:44	12:42:51	HSEA	82	88		1	0	Toward	MI	DI		NONE	E	OC	0	1	0-3 ft		
11/14/2013	CON	NA	12:44:26	12:45:06	HSEA	41	270	90	1	0	None	RE	SI		NONE	E	OC	0	1	0-3 ft		
11/14/2013	CON	NA	12:45:12	12:45:24	HSEA	40	300	75	1	0	Away	SW-S			NONE	E	OC	0	1	0-3 ft		
11/14/2013	CON	NA	12:53:06	12:53:11	HSEA	87	280		1	0	Toward	SW-NE	DI		NONE	E	OC	0	1	0-3 ft		
11/14/2013	CON	NA	13:03:18	13:03:33	HSEA	60	345		1	0	Away	SW-SE			NONE	E	OC	0	1	0-3 ft		
11/14/2013	CON	NA	13:06:25	13:06:40	HSEA	61	210		1	0	Away	SW-SE			NONE	E	OC	0	1	0-3 ft		
11/14/2013	CON	NA	13:29:27	13:29:43	HSEA	15	180	100	1	0	None	RE	SI		NONE	E	OC	0	1	0-3 ft		
11/14/2013	CON	NA	13:45:31	13:45:32	HSEA	15	0	100	1	0	None	RE			NONE	E	OC	0	1	0-3 ft		
11/14/2013	CON	NA	13:56:56	13:57:20	HSEA	20	90	100	1	0	Toward	MI	DI		NONE	E	OC	0	1	0-3 ft		
11/14/2013	CON	J-21	14:03:32	14:04:06	HSEA	200	10	150	1	0	Toward	SW-SE	DI		I	E	OC	0	1	0-3 ft		
11/14/2013	CON	J-21	14:08:49	14:08:52	HSEA	40	135	25	1	0	None	LO			NONE	E	PC	10	1	0-3 ft		
11/14/2013	CON	J-21	14:10:15	14:10:18	HSEA	28	30	18	1	0	Away	SW-NW	DI		NONE	E	PC	0	1	0-3 ft		
11/14/2013	CON	J-21	14:15:49	14:16:06	HSEA	30	90	30	1	0	Away	SW-N	DI		I	E	PC	10	1	0-3 ft		
11/14/2013	CON	J-21	14:18:55	14:19:01	HSEA	30	30	30	1	0	None	LO			NONE	E	PC	10	1	0-3 ft		
11/14/2013	CON	M-21	14:24:46	14:25:04	HSEA	30	90	25	1	0	None	RE	DI		NONE	E	PC	10	1	0-3 ft		
11/14/2013	CON	NA	14:25:56	14:26:36	HSEA	150	190	250	1	0	Parallel	SW-E	DI		NONE	E	OC	0	1	0-3 ft		
11/14/2013	CON	M-21	14:26:32	14:26:39	HSEA	38	0	58	1	0	None	RE	DI		NONE	E	PC	10	1	0-3 ft		
11/14/2013	CON	NA	14:26:38	14:26:45	HSEA	100	160		1	0	Parallel	SW-NE	DI		NONE	E	OC	0	1	0-3 ft		

Date	Event Code	Pile	Start Time	End Time	Species	Dist. To animal (m)	Dir. To animal (deg)	Dist to pile (m)	Best num of animals	Num of juv	Relative motion	Behavior 1	Behavior 2	Behavior 3	Const Type	Visi-bility	Weather	Glare (%)	BSS	Wave ht	Swell Dir	Comments
11/14/2013	CON	M-21	14:28:12	14:30:18	HSEA	40	90	40	1	0	Away	SW-N	LO	DI	NONE	E	PC	10	1	0-3 ft		resurfaced afer a minute
11/14/2013	CON	NA	14:33:32	14:33:49	HSEA	15	270	150	2	0	None	SW-SE	DI		NONE	E	OC	0	1	0-3 ft		
11/14/2013	CON	M-21	14:37:32	14:38:26	HSEA	30	110	80	1	0	Parallel	SW-NE			I	E	OC	0	1	0-3 ft		
11/14/2013	CON	M-21	14:38:32	14:38:53	HSEA	75	135	60	1	0	Parallel	SW-S			I	E	PC	10	1	0-3 ft		
11/14/2013	CON	NA	14:41:20	14:41:27	HSEA	100	90	40	1	0	Toward	SW-E			NONE	E	OC	0	1	0-3 ft		
11/14/2013	CON	NA	14:45:32	14:45:40	HSEA	130	20	150	1	0	Parallel	SW-E	SI		NONE	E	OC	0	1	0-3 ft		
11/14/2013	CON	NA	14:50:50	14:53:12	HSEA	200	0	200	1	0	None	MI	SW-E	DI	NONE	E	OC	0	1	0-3 ft		
11/14/2013	CON	R-21	14:51:02	14:51:06	HSEA	50	135	25	1	0	Away	SW-E			NONE	E	PC	10	1	0-3 ft		
11/14/2013	MS	NA	15:00:23	15:00:30	HSEA	80	290	20	1	0	Toward	SW-NW			NONE	E	OC	0	1	0-3 ft		Seal within shutdown zone
11/14/2013	MS	R-21	15:01:52	15:02:53	HSEA	50	45	55	1	0	Away	SW-N	DI		NONE	E	PC	10	1	0-3 ft		Seal observed outside SD zone, resumed pile driving
11/14/2013	MS	R-21	15:04:10	15:04:12	HSEA	20	90	15	1	0	None	LO	DI		NONE	E	PC	10	1	0-3 ft		Shutdown work when animal surfaced within shutdown zone, resumed work when we saw animal swim out of zone
11/14/2013	CON	NA	15:17:05	15:18:32	HSEA	15	270	80	1	0	Parallel	SW-N	DI		NONE	E	OC	0	1	0-3 ft		
11/14/2013	CON	R-21	15:19:17	15:19:18	HSEA	20	180	100	1	0	None	MI			I	E	OC	0	1	0-3 ft		
11/14/2013	CON	R-21	15:21:18	15:21:19	HSEA	35	45	30	1	0	None	LO			NONE	E	PC	10	1	0-3 ft		
11/14/2013	CON	R-21	15:27:55	15:28:54	HSEA	220	160	370	1	0	Away	SW-SW			I	E	OC	0	1	0-3 ft		
11/14/2013	CON	R-22	15:46:03	15:46:09	HSEA	50	180	200	1	0	Away	SW-S			I	E	PC	10	1	0-3 ft		
11/14/2013	CON	R-22	15:46:26	15:46:36	HSEA	75	45	150	1	0	Away	SW-S	DI		I	E	PC	10	1	0-3 ft		
11/14/2013	CON	R-22	15:48:29	15:48:54	HSEA	50	135	175	1	0	Away	SW-S			I	E	PC	10	1	0-3 ft		
11/14/2013	CON	V.X-46	15:53:30	15:53:44	HSEA	50	100	100	1	0	Toward	SW-N	DI		V	E	PC	10	1	0-3 ft		
11/14/2013	CON	V.X-46	15:55:20	15:55:25	HSEA	50	315	12	1	0	None	LO	DI		V	E	PC	10	1	0-3 ft		
11/14/2013	CON	V.X-46	15:57:09	15:57:25	HSEA	65	270	50	1	0	Toward	SW-N			V	E	PC	10	1	0-3 ft		
11/14/2013	CON	V.X-46	15:57:55	15:58:07	HSEA	50	225	30	1	0	None	MI			V	E	OC	0	1	0-3 ft		
11/14/2013	CON	V.X-46	15:57:55	15:58:07	HSEA	50	225	30	1	0	None	MI			V	E	OC	0	1	0-3 ft		
11/14/2013	CON	V.X-46	16:02:09	16:02:54	HSEA	20	345	25	1	0	Toward	SW-N			V	E	PC	10	1	0-3 ft		
11/14/2013	CON	V.X-46	16:07:32	16:07:51	HSEA	120	90	250	1	0	Parallel	SW-S			V	E	PC	10	1	0-3 ft		
11/14/2013	PRE	NA	8:05:02	8:05:25	HSEA	100	160	250	1	0	Parallel	SW-W	SI		NONE	E	OC	0	1	0-3 ft		
11/14/2013	CON	NA	8:16:39	8:17:03	HSEA	15	0	150	1	0	Away	SW-W	DI		NONE	E	OC	0	1	0-3 ft		
11/14/2013	CON	J-22	8:20:24	8:20:25	HSEA	120	90	180	1	0	Away	RE	DI		NONE	E	OC	0	1	0-3 ft		
11/14/2013	CON	J-22	8:22:30	8:22:35	HSEA	120	90	180	1	0	None	RE			NONE	E	OC	0	1	0-3 ft		
11/14/2013	CON	J-22	8:23:37	8:23:52	HSEA	40	0	90	1	0	None	RE	DI		NONE	E	OC	0	1	0-3 ft		
11/14/2013	CON	J-22	8:31:47	8:31:52	HSEA	50	90	100	1	0	None	RE	SI		NONE	E	OC	0	1	0-3 ft		
11/14/2013	CON	J-22	8:37:02	8:37:14	HSEA	50	90	160	1	0	None	RE			NONE	E	OC	0	1	0-3 ft		
11/14/2013	CON	J-22	8:45:09	8:45:21	HSEA	15	0	130	1	0	Parallel	SW-E	SI		I	E	OC	0	1	0-3 ft		
11/15/2013	CON	M-22	9:08:47	9:08:53	HSEA	68	180	88	1	0	Parallel	SW-E	DI		I	E	OC	0	1	0-3 ft		
11/14/2013	CON	J-21	9:30:09	9:30:31	HSEA	70	0	80	1	0	Toward	SW-E	SI		NONE	E	OC	0	1	0-3 ft		

Date	Event Code	Pile	Start Time	End Time	Species	Dist. To animal (m)	Dir. To animal (deg)	Dist to pile (m)	Best num of animals	Num of juv	Relative motion	Behavior 1	Behavior 2	Behavior 3	Const Type	Visi-bility	Weather	Glare (%)	BSS	Wave ht	Swell Dir	Comments
11/14/2013	CON	J-21	9:33:27	9:33:32	HSEA	80	180	60	1	0	None	RE	DI		I	E	OC	0	1	0-3 ft		
11/14/2013	CON	J-21	9:47:55	9:48:02	HSEA	40	190	140	1	0	Toward	SW-E			NONE	E	OC	0	1	0-3 ft		
11/14/2013	CON	J-21	9:50:36	9:50:58	HSEA	44	270	100	1	0	None	MI	DI		NONE	E	OC	0	1	0-3 ft		
11/14/2013	CON	J-21	9:52:30	9:55:10	CASL	85	90	30	1	0	Parallel	TR-N			NONE	E	OC	0	1	0-3 ft		
11/14/2013	CON	J-21	10:27:26	10:30:03	HSEA	380	135	350	1	0	Away	MI	DI		NONE	E	OC	0	1	0-3 ft		
11/14/2013	CON	J-21	10:31:51	10:34:09	HSEA	65	90	50	1	0	Toward	MI	DI		NONE	E	OC	0	1	0-3 ft		
11/14/2013	CON	J-21	10:35:46	10:49:54	HSEA	65	90	50	1	0	None	MI	DI		NONE	E	OC	0	1	0-3 ft		
11/14/2013	CON	NA	10:58:37	10:59:07	HSEA	36	180		1	1	None	LO	SI		NONE	E	OC	0	1	0-3 ft		
11/14/2013	CON	NA	11:02:44	11:02:46	CASL	126	180		1	0	Toward	TR-NE	DI		NONE	E	OC	0	1	0-3 ft		
11/14/2013	CON	NA	11:08:26	11:08:38	HSEA	128	175		1	0	None	LO	SI		NONE	E	OC	0	1	0-3 ft		
11/14/2013	CON	NA	11:09:25	11:09:42	HSEA	136	180		2	0	None	MI			NONE	E	OC	0	1	0-3 ft		
11/14/2013	CON	NA	11:12:02	11:12:32	HSEA	77	135		1	1	None	RE	SI		NONE	E	OC	0	1	0-3 ft		
11/14/2013	CON	NA	11:19:47	11:20:03	HSEA	82	270		1	0	None	LO	DI		NONE	E	OC	0	1	0-3 ft		
11/14/2013	CON	NA	11:24:00	11:25:14	HSEA	83	100		1	1	None	RE	SI		NONE	E	L	0	1	0-3 ft		
11/14/2013	CON	NA	11:27:30	11:27:37	HSEA	110	90		1	1	Away	SW-S	DI		NONE	E	L	0	1	0-3 ft		
11/14/2013	CON	NA	11:27:39	11:27:45	HSEA	89	120		1	0	None	RE	DI		NONE	E	L	0	1	0-3 ft		
11/14/2013	CON	NA	11:29:58	11:32:36	HSEA	132	110		1	0	Toward	SW-N	RE		NONE	E	L	0	1	0-3 ft		
11/14/2013	CON	NA	11:34:27	11:35:03	HSEA	128	70		1	1	Toward	SW-N			NONE	E	L	0	1	0-3 ft		
11/14/2013	CON	NA	11:36:26	11:37:57	HSEA	119	145		1	1	None	RE	SI		NONE	E	L	0	1	0-3 ft		
11/14/2013	CON	NA	11:39:37	11:40:20	HSEA	91	85		1	1	Toward	RE			NONE	E	L	0	1	0-3 ft		
11/14/2013	CON	NA	11:40:58	11:41:06	HSEA	120	160		1	1	Away	MI			NONE	E	L	0	1	0-3 ft		
11/14/2013	CON	NA	11:42:08	11:42:25	HSEA	82	85		1	1	Toward	RE	DI		NONE	E	L	0	1	0-3 ft		
11/14/2013	CON	NA	11:45:34	11:46:04	HSEA	142	90		1	1	Toward	RE	DI		NONE	E	L	0	1	0-3 ft		
11/14/2013	CON	NA	11:48:11	11:48:48	HSEA	103	60		1	1	None	RE	SI		NONE	E	L	0	1	0-3 ft		
11/14/2013	CON	NA	11:50:18	11:50:45	HSEA	200	120		1	1	Toward	SW-N	SI		NONE	E	L	0	1	0-3 ft		
11/14/2013	CON	NA	12:03:21	12:03:43	HSEA	83	110	130	1	2	Toward	SW-N	DI		NONE	E	L	0	1	0-3 ft		20 m apart, inividual NW of seal sank at 12:03:10
11/14/2013	CON	NA	12:11:19	12:11:39	HSEA	90	90	120	1	0	Toward	SW-N	DI		NONE	E	L	0	1	0-3 ft		
11/14/2013	CON	NA	12:17:40	12:18:49	HSEA	95	160	155	1	0	Away	SW-S			NONE	E	L	0	1	0-3 ft		
11/14/2013	CON	NA	12:28:51	12:29:17	HSEA	100	90	85	1	0	Toward	SW-N			NONE	E	L	0	1	0-3 ft		

Date	Event Code	Pile	Start Time	End Time	Species	Dist. To animal (m)	Dir. To animal (deg)	Dist to pile (m)	Best num of animals	Num of juv	Relative motion	Behavior 1	Behavior 2	Behavior 3	Const Type	Visi-bility	Weather	Glare (%)	BSS	Wave ht	Swell Dir	Comments
11/14/2013	CON	NA	12:30:40	12:32:18	HSEA	98	80	115	1	0	Toward	SW-N	DI		NONE	E	L	0	1	0-3 ft		
11/14/2013	CON	NA	12:34:43	12:34:51	HSEA	95	150	180	1	0	Away	MI	SI		NONE	E	L	0	1	0-3 ft		
11/14/2013	CON	NA	12:56:22	12:56:29	HSEA	170	100	150	1	0	None	FL	SI		NONE	E	OC	1	1	0-3 ft		
11/14/2013	CON	NA	13:18:53	13:18:57	HSEA	250	180		1	0	None	DI			NONE	E	OC	1	1	0-3 ft		
11/14/2013	CON	NA	13:23:35	13:24:15	HSEA	350	150		1	0	Away	SW-S			NONE	E	OC	1	1	0-3 ft		
11/14/2013	CON	NA	13:30:00	13:31:06	HSEA	170	345		1	0	None	LO	RE	SI	NONE	E	OC	1	1	0-3 ft		
11/14/2013	CON	NA	13:38:39	13:39:30	HSEA	60	30		1	0	None	LO			NONE	E	OC	1	1	0-3 ft		
11/15/2013	CON	NA	13:40:35	13:41:03	HSEA	70	280	85	1	0	None	RE	SI		NONE	E	PC	10	1	0-3 ft		
11/15/2013	CON	NA	13:45:00	13:45:07	HSEA	50	270	75	1	0	Toward	RE	LO	SI	NONE	E	PC	10	1	0-3 ft		
11/15/2013	CON	NA	13:51:08	13:51:14	HSEA	50	190	40	1	0	Away	SW-SE			NONE	E	PC	10	1	0-3 ft		
11/14/2013	CON	NA	13:51:42	13:58:26	HSEA	175	140		1	0	None	RE	DI		NONE	E	OC	1	1	0-3 ft		
11/14/2013	CON	NA	13:58:28	13:58:33	HSEA	30	180	175	1	0	None	MI	DI		NONE	E	OC	1	1	0-3 ft		
11/15/2013	CON	NA	14:06:15	14:06:23	HSEA	70	190	85	1	0	None	RE	SI		NONE	E	PC	10	1	0-3 ft		
11/15/2013	CON	NA	14:09:14	14:09:28	HSEA	85	270	80	1	0	Away	LO	SI		NONE	E	PC	10	1	0-3 ft		Spyhopping-looked and then sank
11/14/2013	CON	NA	14:10:49	14:10:52	HSEA	10	180	200	1	0	None	RE	DI		NONE	E	OC	1	1	0-3 ft		
11/14/2013	CON	NA	14:13:12	14:13:16	HSEA	30	60	200	1	0	None	RE			NONE	E	OC	1	1	0-3 ft		
11/14/2013	CON	NA	14:26:29	14:26:30	HSEA	72	0	15	1	0	None	RE	DI		NONE	E	OC	1	1	0-3 ft		
11/14/2013	CON	NA	14:32:28	14:32:29	HSEA	60	60	120	1	0	Away	SW-S			NONE	E	OC	1	1	0-3 ft		
11/14/2013	CON	V.X-46	15:10:36	15:10:37	HSEA	50	0	150	1	0	None	RE			I	E	OC	1	1	0-3 ft		
11/16/2013	PRE	NA	8:29:26	8:30:06	HSEA	80	310	270	1	0	Parallel	SW-N			NONE	E	S	20	1	0-3 ft		
11/16/2013	PRE	NA	8:34:56	8:35:10	HSEA	80	70	250	1	0	Away	SW-SW	DI		NONE	E	S	20	1	0-3 ft		
11/16/2013	CON	NA	9:06:18	9:06:19	HSEA	20	0	140	1	1	None	MI	DI		NONE	E	OC	1	1	0-3 ft		
11/16/2013	CON	NA	9:13:09	9:13:20	HSEA	20	110	80	1	0	Parallel	SW-NW	DI		NONE	E	OC	1	1	0-3 ft		
11/16/2013	CON	NA	9:34:12	9:35:03	HSEA	70	75	250	1	0	Toward	SW-N			NONE	E	OC	1	1	0-3 ft		
11/16/2013	CON	NA	9:54:26	9:54:35	HSEA	205	10	275	1	0	Away	SW-N			NONE	E	OC	1	1	0-3 ft		
11/16/2013	CON	NA	10:11:09	10:13:10	HSEA	125	100	200	2	0	None	SW-S	SI		NONE	E	PC	5	0	0-3 ft		
11/16/2013	CON	NA	10:39:26	10:39:32	HSEA	125	15	75	1	0	None	SI			NONE	E	PC	5	0	0-3 ft		
11/16/2013	CON	NA	10:46:08	10:49:54	HSEA	100	30	40	2	0	Parallel	SW-E			NONE	E	PC	5	0	0-3 ft		
11/16/2013	CON	NA	10:51:04	10:51:37	HSEA	50	225	200	1	0	Away	SW-S	SI		NONE	E	PC	5	0	0-3 ft		

Date	Event Code	Pile	Start Time	End Time	Species	Dist. To animal (m)	Dir. To animal (deg)	Dist to pile (m)	Best num of animals	Num of juv	Relative motion	Behavior 1	Behavior 2	Behavior 3	Const Type	Visi-bility	Weather	Glare (%)	BSS	Wave ht	Swell Dir	Comments
11/16/2013	CON	NA	10:53:14	10:53:16	HSEA	100	115	200	1	0	Away	SI			NONE	E	PC	5	0	0-3 ft		
11/16/2013	CON	NA	10:57:13	10:57:21	HSEA	75	90	75	1	0	None	RE			NONE	E	PC	5	0	0-3 ft		nose up
11/16/2013	CON	NA	10:59:33	11:00:19	HSEA	150	15	75	1	0	None	RE			NONE	E	PC	5	0	0-3 ft		
11/16/2013	CON	NA	11:02:54	11:03:12	HSEA	75	0	100	1	0	None	SI			NONE	E	PC	5	0	0-3 ft		
11/16/2013	CON	NA	11:15:49	11:15:55	HSEA	40	110	80	1	0	None	MI	DI		NONE	E	PC	5	0	0-3 ft		
11/16/2013	CON	NA	11:18:51	11:19:06	HSEA	20	275	30	1	0	Away	SW-W			NONE	E	PC	10	1	0-3 ft		
11/16/2013	CON	NA	11:19:22	11:19:46	HSEA	10	90	175	2	0	None	MI	DI		NONE	E	PC	5	0	0-3 ft		
11/16/2013	CON	NA	11:20:43	11:20:53	HSEA	130	0	100	1	0	Toward	SW-SE			NONE	E	PC	5	0	0-3 ft		
11/16/2013	CON	NA	11:23:43	11:24:08	HSEA	35	180	20	1	0	Parallel	SW-NE	SI		NONE	E	PC	10	1	0-3 ft		
11/16/2013	CON	NA	11:23:59	11:24:02	HSEA	100	90	60	1	0	Parallel	SW-N	DI		NONE	E	PC	5	0	0-3 ft		
11/16/2013	CON	NA	11:26:59	11:27:04	HSEA	15	170	40	1	0	Away	SW-E			NONE	E	PC	10	1	0-3 ft		
11/16/2013	CON	NA	11:28:38	11:28:54	HSEA	60	0	150	1	0	Toward	SW-E	DI		NONE	E	PC	5	0	0-3 ft		
11/16/2013	CON	NA	11:32:30	11:32:45	CASL	20	310	180	1	0	None	MI	DI		NONE	E	PC	5	0	0-3 ft		
11/16/2013	CON	NA	11:35:33	11:35:36	CASL	400	270	600	1	0	Away	SW-W	DI		NONE	E	PC	5	0	0-3 ft		
11/16/2013	CON	NA	11:36:59	11:38:35	CASL	160	210	320	1	0	Away	TR-S			NONE	E	PC	5	0	0-3 ft		
11/16/2013	CON	NA	11:39:27	11:39:45	HSEA	20	250	40	1	0	Parallel	SW-NE			NONE	E	PC	10	1	0-3 ft		
11/16/2013	CON	NA	11:39:52	11:42:27	CASL	210	180	320	1	0	None	UN	DI		NONE	E	PC	5	0	0-3 ft		trying to haul out on barge
11/16/2013	CON	NA	11:43:30	11:43:46	HSEA	5	45	160	1	0	Toward	SW-SE	SI		NONE	E	PC	5	0	0-3 ft		
11/16/2013	CON	NA	11:45:08	11:46:28	HSEA	10	135	160	1	0	None	PL	DI		NONE	E	PC	5	0	0-3 ft		
11/16/2013	CON	NA	11:46:48	11:47:11	HSEA	50	275	45	2	0	Parallel	SW-S	DI		NONE	E	PC	10	1	0-3 ft		
11/16/2013	CON	NA	11:51:58	11:52:10	HSEA	55	200	45	1	0	Parallel	SW-S			NONE	E	PC	10	1	0-3 ft		
11/16/2013	CON	NA	11:53:50	11:54:42	CASL	100	200	350	1	0	Parallel	SW-NE	DI		NONE	E	PC	5	0	0-3 ft		
11/16/2013	CON	NA	11:54:25	11:54:33	HSEA	60	210	50	1	0	Parallel	SW-N			NONE	E	PC	10	1	0-3 ft		
11/16/2013	CON	NA	11:56:00	11:56:04	HSEA	43	200	35	1	0	Away	SW-NW			NONE	E	PC	10	1	0-3 ft		
11/16/2013	CON	NA	11:57:02	11:57:06	HSEA	45	275	50	1	0	Away	SW-E	DI		NONE	E	PC	10	1	0-3 ft		
11/16/2013	CON	NA	11:57:41	11:59:15	HSEA	150	90	60	1	0	Parallel	SW-S	SI		NONE	E	PC	5	0	0-3 ft		
11/16/2013	CON	NA	12:03:15	12:03:22	HSEA	75	135	170	2	0	Toward	SW-N	SI		NONE	E	PC	5	0	0-3 ft		
11/16/2013	CON	NA	12:04:11	12:04:18	HSEA	45	200	15	1	0	Parallel	SW-NE			NONE	E	PC	10	1	0-3 ft		

Date	Event Code	Pile	Start Time	End Time	Species	Dist. To animal (m)	Dir. To animal (deg)	Dist to pile (m)	Best num of animals	Num of juv	Relative motion	Behavior 1	Behavior 2	Behavior 3	Const Type	Visi-bility	Weather	Glare (%)	BSS	Wave ht	Swell Dir	Comments
11/16/2013	CON	NA	12:06:26	12:06:33	HSEA	150	90	110	1	1	Away	SW-S			NONE	E	PC	5	0	0-3 ft		
11/16/2013	CON	NA	12:07:35	12:07:40	CASL	50	195	240	1	0	None	LO			NONE	E	PC	5	0	0-3 ft		packages very active, sea lions in the water
11/16/2013	CON	NA	12:14:23	12:24:20	HSEA	250	135	300	2	0	None	RE			NONE	E	PC	5	0	0-3 ft		
11/16/2013	CON	NA	12:16:18	12:16:24	HSEA	10	90	175	1	0	None	SI			NONE	E	PC	5	0	0-3 ft		
11/16/2013	CON	NA	12:21:32	12:22:15	CASL	5	270	200	2	0	Away	SW-SE	SI		NONE	E	PC	5	0	0-3 ft		
11/16/2013	CON	NA	12:25:01	12:25:05	HSEA	45	275	38	1	0	None	RE	SI		NONE	E	PC	10	1	0-3 ft		
11/16/2013	CON	NA	12:28:22	12:28:58	HSEA	111	110	70	1	0	Parallel	SW-N	DI		NONE	E	PC	5	0	0-3 ft		
11/16/2013	CON	NA	12:31:26	12:31:44	HSEA	70	90	60	1	0	None	SW-N	SI		NONE	E	PC	5	0	0-3 ft		
11/16/2013	CON	NA	12:32:32	12:33:06	HSEA	50	130	120	1	0	None	MI	DI		NONE	E	PC	5	0	0-3 ft		
11/16/2013	CON	NA	12:33:08	12:33:32	HSEA	250	160	370	1	0	None	SW-W	SI		NONE	E	PC	5	0	0-3 ft		
11/16/2013	CON	NA	12:41:40	12:41:52	HSEA	80	160	200	1	0	None	SW-SW	SI		NONE	E	PC	5	0	0-3 ft		
11/16/2013	CON	NA	12:45:08	12:45:24	HSEA	75	190	170	1	0	None	SW-S	SI		NONE	E	PC	5	0	0-3 ft		
11/16/2013	CON	NA	12:48:15	12:48:21	HSEA	15	200	12	1		Away	SW-N	DI		NONE	E	PC	10	1	0-3 ft		
11/16/2013	CON	NA	12:55:34	12:57:35	HSEA	250	0	250	1	0	None	LO	SI		NONE	E	PC	5	0	0-3 ft		
11/16/2013	CON	NA	12:55:55	12:56:07	HSEA	100	45	100	1	0	None	MI	DI		NONE	E	PC	5	0	0-3 ft		
11/16/2013	CON	NA	12:58:12	12:58:42	HSEA	30	90	30	2	0	None	MI	DI		NONE	E	PC	5	0	0-3 ft		
11/16/2013	CON	NA	12:59:26	12:59:36	HSEA	145	90	30	1	0	None	MI	SI		NONE	E	PC	5	0	0-3 ft		
11/16/2013	CON	NA	12:59:39	12:59:50	HSEA	100	110	80	1	0	None	SW-S	SI		NONE	E	PC	5	0	0-3 ft		
11/16/2013	CON	NA	13:01:12	13:01:21	HSEA	60	210	30	1	0	Toward	SW-SE			NONE	E	PC	10	1	0-3 ft		
11/16/2013	CON	NA	13:03:00	13:03:05	HSEA	50	90	120	1	0	None	RE	DI		NONE	E	PC	5	0	0-3 ft		
11/16/2013	CON	NA	13:05:58	13:06:22	HSEA	230	90	50	1	0	Toward	SW-N	DI		NONE	E	PC	5	0	0-3 ft		
11/16/2013	CON	NA	13:06:24	13:10:17	HSEA	64	90	50	1	0	None	SW-N	SI		NONE	E	PC	5	0	0-3 ft		
11/16/2013	CON	V.X-45	13:20:54	13:21:45	HSEA	8	260	15	2	0	Toward	SW-SE	SI		V	E	PC	10	1	0-3 ft		
11/16/2013	CON	V.X-45	13:20:59	13:21:09	HSEA	82	20	140	1	0	Toward	SW-E	SI		V	E	PC	5	0	0-3 ft		
11/16/2013	CON	V.X-45	13:24:14	13:25:18	HSEA	151	110	20	1	0	None	SW-S			V	E	PC	5	0	0-3 ft		
11/16/2013	CON	NA	13:28:59	13:29:18	HSEA	130	60	50	1	0	None	SW-S			NONE	E	PC	5	0	0-3 ft		
11/16/2013	CON	NA	13:31:32	13:34:25	CASL	70	0	180	1	0	None	TR-S			NONE	E	PC	5	0	0-3 ft		
11/16/2013	CON	NA	13:32:14	13:32:19	HSEA	35	210	30	1	0	Away	SW-SW			NONE	E	PC	10	1	0-3 ft		
11/16/2013	CON	V.X-45	13:37:34	13:38:17	HSEA	5	290	30	1	1	Toward	SW-S	DI		V	E	PC	10	1	0-3 ft		
11/16/2013	CON	V.X-45	13:42:56	13:43:08	HSEA	28	280	40	1	0	Toward	SW-SE	SI		V	E	PC	10	1	0-3 ft		
11/16/2013	CON	NA	13:44:28	13:45:26	HSEA	30	80	160	1	0	None	SI			NONE	E	PC	5	0	0-3 ft		

Date	Event Code	Pile	Start Time	End Time	Species	Dist. To animal (m)	Dir. To animal (deg)	Dist to pile (m)	Best num of animals	Num of juv	Relative motion	Behavior 1	Behavior 2	Behavior 3	Const Type	Visi-bility	Weather	Glare (%)	BSS	Wave ht	Swell Dir	Comments
11/16/2013	CON	NA	13:46:15	13:48:52	HSEA	50	190	190	1	0	Parallel	LO	SI	DI	NONE	E	PC	5	0	0-3 ft		
11/16/2013	CON	NA	13:47:29	13:47:59	HSEA	9	220	16	1	1	None	RE	SI		NONE	E	PC	10	1	0-3 ft		
11/16/2013	CON	NA	13:51:09	13:52:35	HSEA	100	90	50	1	0	None	RE	SI		NONE	E	PC	5	0	0-3 ft		
11/16/2013	CON	NA	13:53:13	13:53:55	HSEA	135	135	75	1	0	None	SW-N			NONE	E	PC	5	0	0-3 ft		
11/16/2013	CON	NA	13:53:40	13:53:46	HSEA	65	285	50	1	0	Away	SW-N	SI		NONE	E	PC	10	1	0-3 ft		
11/16/2013	CON	NA	14:02:19	14:03:48	HSEA	60	80	45	3	0	Away	SW-W			NONE	E	PC	5	0	0-3 ft		2nd seal-80m away from obsevor, 60m from pile, 90 degrees. Third animal-200meters away from observer,
11/16/2013	CON	NA	14:07:00	14:07:03	HSEA	75	100	100	1	0	None	DI			NONE	E	PC	5	0	0-3 ft		
11/16/2013	CON	NA	14:08:42	14:08:46	HSEA	170	20	100	1	0	Toward	SW-N			NONE	E	PC	5	0	0-3 ft		
11/16/2013	CON	NA	14:35:46	14:35:51	HSEA	200	190	220	1	0	Toward	SW-N			NONE	E	PC	5	0	0-3 ft		
11/16/2013	CON	NA	14:39:04	14:39:16	HSEA	110	90	150	1	0	None	SW-N			NONE	E	PC	5	0	0-3 ft		
11/16/2013	CON	NA	14:42:14	14:42:20	HSEA	75	290	60	1	0	Parallel	SW-S	SI		NONE	E	PC	10	1	0-3 ft		
11/16/2013	CON	NA	14:42:17	14:42:27	HSEA	50	20	100	1	0	None	SW-N	SI		NONE	E	PC	5	0	0-3 ft		
11/16/2013	CON	NA	14:46:16	14:46:25	HSEA	15	45	135	1	0	Away	SW-SW	DI		NONE	E	PC	5	0	0-3 ft		
11/16/2013	CON	NA	14:47:11	14:47:40	HSEA	170	0	100	1	0	Away	SW-W	SI		NONE	E	PC	5	0	0-3 ft		
11/16/2013	CON	NA	14:54:02	14:54:08	HSEA	300	140	200	1	0	None	MI			NONE	E	PC	5	0	0-3 ft		
11/16/2013	CON	NA	14:56:20	14:56:21	HSEA	30	20	120	1	1	None	DI			NONE	E	PC	5	0	0-3 ft		
11/16/2013	CON	NA	14:56:29	14:56:35	HSEA	10	200	11	1	0	Toward	RE	SI		NONE	E	PC	10	1	0-3 ft		
11/16/2013	CON	NA	14:59:29	15:00:24	HSEA	10	10	175	1	0	None	RE			NONE	E	PC	5	0	0-3 ft		
11/16/2013	CON	NA	15:04:25	15:04:26	HSEA	70	90	60	1	0	None	MI			NONE	E	PC	5	0	0-3 ft		
11/16/2013	CON	NA	15:08:09	15:08:12	HSEA	40	90	150	1	0	Parallel	SW-E			NONE	E	PC	5	0	0-3 ft		
11/16/2013	CON	NA	15:08:12	15:08:34	HSEA	25	200	17	1	0	None	MI	RE	SI	NONE	E	PC	10	1	0-3 ft		
11/16/2013	CON	NA	15:09:50	15:10:09	HSEA	60	70	100	1	0	None	SW-N	DI		NONE	E	PC	5	0	0-3 ft		
11/16/2013	CON	NA	15:10:33	15:10:39	HSEA	50	270	60	1	0	None	DI			NONE	E	PC	5	0	0-3 ft		
11/16/2013	CON	NA	15:11:43	15:12:04	HSEA	25	200	17	1	0	None	RE	DI		NONE	E	PC	10	1	0-3 ft		
11/16/2013	CON	NA	15:12:25	15:13:01	HSEA	20	290	35	1	0	Toward	SW-SE	SI		NONE	E	PC	10	1	0-3 ft		
11/16/2013	CON	NA	15:13:20	15:13:21	HSEA	120	90	100	1	0	None	SW-S			NONE	E	PC	5	0	0-3 ft		
11/16/2013	CON	NA	15:17:41	15:21:38	HSEA	40	80	120	1	0	None	DI	MI	SI	NONE	E	PC	5	0	0-3 ft		

Date	Event Code	Pile	Start Time	End Time	Species	Dist. To animal (m)	Dir. To animal (deg)	Dist to pile (m)	Best num of animals	Num of juv	Relative motion	Behavior 1	Behavior 2	Behavior 3	Const Type	Visi-bility	Weather	Glare (%)	BSS	Wave ht	Swell Dir	Comments
11/16/2013	CON	NA	15:19:40	15:19:55	HSEA	60	270	80	1	0	None	RE			NONE	E	PC	5	0	0-3 ft		
11/16/2013	CON	NA	15:20:18	15:20:24	HSEA	45	190	25	1	0	None	FO			NONE	E	PC	10	1	0-3 ft		Nose in the air eating unknown species of fish
11/16/2013	CON	NA	15:23:28	15:23:35	HSEA	10	90	200	1	0	None	SW-E	DI		NONE	E	PC	5	0	0-3 ft		
11/16/2013	CON	NA	15:26:09	15:26:25	HSEA	8	340	45	1	1	None	LO	DI		NONE	E	PC	10	1	0-3 ft		
11/16/2013	CON	NA	15:27:43	15:27:47	HSEA	240	0	60	1	0	Away	SW-W			NONE	E	PC	5	0	0-3 ft		
11/16/2013	CON	NA	15:28:55	15:29:31	HSEA	30	90	24	1	0	Away	SW-S	SI		NONE	E	PC	5	0	0-3 ft		
11/16/2013	CON	NA	15:29:40	15:29:48	HSEA	25	190	20	1	0	Parallel	SW-SE			NONE	E	PC	10	1	0-3 ft		
11/16/2013	CON	NA	15:30:44	15:31:16	HSEA	30	270	25	1	0	Toward	SW-N			NONE	E	PC	5	0	0-3 ft		
11/16/2013	CON	V.X-45	15:34:08	15:34:22	HSEA	35	210	22	1	0	Toward	SW-SE			SSI	E	PC	10	1	0-3 ft		
11/16/2013	CON	V.X-45	15:36:47	15:37:06	HSEA	60	90	60	1	0	Away	SW-S			I	E	PC	5	0	0-3 ft		
11/16/2013	CON	V.X-45	15:37:22	15:38:23	HSEA	225	90	270	2	0	Away	SW-S	SI		I	E	PC	5	0	0-3 ft		
11/16/2013	MS	V.X-45	15:39:00	15:41:41	HSEA	28	200	18	1	0	Away	SW-E	SI		NONE	E	PC	10	1	0-3 ft		Shutdown when animal surfaced in to zone. Resumed work after sighting animal outside zone.
11/16/2013	CON	V.X-45	15:45:53	15:46:48	HSEA	50	330	55	1	0	None	LO	SI		I	E	PC	10	1	0-3 ft		Allowed impact to resume
11/16/2013	CON	V.X-45	15:48:09	15:48:10	HSEA	30	90	150	1	0	Parallel	SW-N			I	E	PC	5	0	0-3 ft		
11/16/2013	CON	V.X-45	15:50:32	15:50:48	HSEA	200	20	270	1	0	Away	SW-N			I	E	PC	5	0	0-3 ft		
11/16/2013	CON	V.X-45	15:51:11	15:51:24	HSEA	40	290	40	1	0	Toward	SW-N			I	E	PC	5	0	0-3 ft		
11/16/2013	POST	NA	15:54:40	15:55:21	HSEA	40	90	5	1	0	None	RE			NONE	E	PC	5	0	0-3 ft		
11/16/2013	POST	NA	15:55:22	15:57:40	HSEA	90	295	75	1	0	Away	RE	SW-N		NONE	E	PC	10	1	0-3 ft		
11/16/2013	POST	NA	16:00:19	16:00:28	HSEA	88	280	95	1	0	Away	SW-NW	DI		NONE	E	PC	10	1	0-3 ft		
11/16/2013	POST	NA	16:03:52	16:04:01	HSEA	100	290	110	1	0	None	MI			NONE	E	PC	10	1	0-3 ft		
11/16/2013	POST	NA	16:04:19	16:04:20	HSEA	100	90	70	1	0	Parallel	SW-E			NONE	E	PC	5	0	0-3 ft		
11/16/2013	POST	NA	16:04:34	16:04:47	HSEA	15	275	30	1	0	None	RE			NONE	E	PC	10	1	0-3 ft		
11/16/2013	POST	NA	16:07:16	16:07:21	HSEA	40	90	70	1	0	None	DI			NONE	E	PC	5	0	0-3 ft		
11/16/2013	POST	NA	16:08:31	16:08:33	HSEA	180	190	150	1	0	None	DI			NONE	E	PC	10	1	0-3 ft		
11/16/2013	POST	NA	16:09:31	16:09:41	HSEA	50	0	160	1	0	None	SW-E	DI		NONE	E	PC	5	0	0-3 ft		
11/16/2013	POST	NA	16:13:00	16:15:55	HSEA	70	90	100	2	0	None	MI			NONE	E	PC	5	0	0-3 ft		
11/16/2013	POST	NA	16:15:58	16:16:28	HSEA	40	275	35	1	0	Away	SW-E			NONE	E	PC	10	1	0-3 ft		
11/16/2013	POST	NA	16:17:17	16:17:28	HSEA	30	90	120	1	0	Parallel	SW-N	DI		NONE	E	PC	5	0	0-3 ft		
11/16/2013	POST	NA	16:22:09	16:22:11	HSEA	15	290	5	1	0	Toward	SW-N			NONE	E	PC	5	0	0-3 ft		
11/18/2013	OTHR		9:00:19	9:11:50	STSL				11	1	None	RE	FI		OTHER	G	OC	0	2	0-3 ft		STSL hauled out at Delta

Date	Event Code	Pile	Start Time	End Time	Species	Dist. To animal (m)	Dir. To animal (deg)	Dist to pile (m)	Best num of animals	Num of juv	Relative motion	Behavior 1	Behavior 2	Behavior 3	Const Type	Visi-bility	Weather	Glare (%)	BSS	Wave ht	Swell Dir	Comments
11/18/2013	OTHR		9:00:23	9:11:42	CASL				96		None	RE	PL		OTHER	G	OC	0	2	0-3 ft		Hauled out at Delta and on wra fence, many juveniles
11/18/2013	CON	NA	9:24:49	9:25:22	HSEA	75	90		1	1	Away	SW-S	LO		NONE	G	OC	0	1	0-3 ft		
11/18/2013	CON	NA	9:30:16	9:30:30	HSEA	55	100		1	1	None	SW-SW	LO		NONE	G	OC	0	1	0-3 ft		
11/18/2013	CON	NA	9:56:14	9:56:29	HSEA	26	158	67	1	1	Parallel	RE	SI		NONE	G	OC	0	1	0-3 ft		
11/18/2013	CON	NA	10:39:31	10:40:14	HSEA	120	0	160	1	0	Away	SW-SW	SI		NONE	G	OC	0	1	0-3 ft		
11/18/2013	CON	NA	11:43:10	11:43:23	HSEA	90	180		1		None	RE	LO	SI	NONE	G	R	0	2	0-3 ft		
11/18/2013	CON	NA	11:50:43	11:50:57	HSEA	65	5	85	1	0	Toward	SW-E			NONE	G	R	0	2	0-3 ft		
11/18/2013	CON	NA	11:54:27	11:54:36	HSEA	34	90	34	1	0	None	LO			NONE	G	R	0	2	0-3 ft		
11/18/2013	CON	NA	11:59:42	12:00:04	HSEA	45	0	87	1	0	None	RE			NONE	G	R	0	2	0-3 ft		
11/18/2013	CON	NA	12:05:14	12:05:25	HSEA	15	35	68	1	0	None	MI			NONE	G	R	0	2	0-3 ft		
11/18/2013	CON	NA	12:07:33	12:07:49	HSEA	47	45	48	1	1	None	MI	RE		NONE	G	R	0	1	0-3 ft		
11/18/2013	CON	NA	12:25:56	12:26:27	HSEA	8	45	130	1	0	Parallel	RE	SI		NONE	G	R	0	1	0-3 ft		
11/18/2013	CON	NA	13:21:43	13:22:27	HSEA	350	170	330	1	0	Away	SW-SW			NONE	G	R	0	1	0-3 ft		
11/18/2013	CON	NA	13:41:36	13:42:12	HSEA	90	80		2		None	MI			NONE	G	R	0	1	0-3 ft		
11/18/2013	CON	NA	13:49:02	13:49:47	HSEA	50	280		1	0	None	RE	SW-N	DI	NONE	G	R	0	1	0-3 ft		
11/18/2013	CON	NA	14:29:02	14:29:35	HSEA	75	80	45	1	0	Parallel	SW-N			NONE	G	R	0	1	0-3 ft		
11/18/2013	CON	NA	14:37:13	14:37:28	HSEA	68	120	75	1	0	None	RE	UN		NONE	G	R	0	1	0-3 ft		Nose up in the air, resting behavior
11/18/2013	CON	NA	14:39:08	14:39:23	HSEA	85	130	80	1	0	Away	RE	UN	DI	NONE	G	R	0	1	0-3 ft		Nose up in the air
11/18/2013	CON	NA	14:46:46	14:47:00	HSEA	35	345	36	1	0	Away	MI			NONE	E	R	10	1	0-3 ft		
11/18/2013	CON	NA	14:58:24	14:58:42	CASL	200	320	250	1	0	Parallel	SW-S	DI		NONE	G	R	0	1	0-3 ft		
11/18/2013	CON	NA	15:03:14	15:03:24	HSEA	36	200	25	1	1	None	MI			NONE	E	R	10	1	0-3 ft		
11/18/2013	CON	NA	15:14:01	15:14:14	HSEA	45	270	38	1	1	None	RE			V	E	R	10	1	0-3 ft		
11/18/2013	CON	V.X-47	15:15:25	15:16:01	HSEA	80	90	150	1		None	RE	MI		V	G	R	0	1	0-3 ft		
11/18/2013	POST	NA	15:22:49	15:22:57	HSEA	35	345	55	1	1	None	LO	SI		NONE	E	R	10	1	0-3 ft		
11/18/2013	POST	NA	15:29:01	15:29:18	HSEA	45	267	46	1	1	None	MI			NONE	E	R	10	1	0-3 ft		
11/19/2013	CON	NA	8:36:47	8:37:06	HSEA	50	75		1		None	LO	MI		NONE	E	OC	0	1	0-3 ft		
11/19/2013	CON	NA	8:42:57	8:43:47	HSEA	120	110		1		None	RE			NONE	E	OC	0	1	0-3 ft		
11/19/2013	CON	NA	8:44:24	8:44:38	HSEA	10	90		1	1	Parallel	SW-W	DI		NONE	E	OC	0	1	0-3 ft		
11/19/2013	CON	NA	8:49:11	8:49:43	HSEA	80	100	180	1	1	Parallel	SW-W	LO	DI	NONE	E	OC	0	1	0-3 ft		
11/19/2013	CON	V.X-47	8:50:35	8:50:41	HSEA	20	90	25	1	1	Away	SW-N			I	E	OC	0	1	0-3 ft		

Date	Event Code	Pile	Start Time	End Time	Species	Dist. To animal (m)	Dir. To animal (deg)	Dist to pile (m)	Best num of animals	Num of juv	Relative motion	Behavior 1	Behavior 2	Behavior 3	Const Type	Visi-bility	Weather	Glare (%)	BSS	Wave ht	Swell Dir	Comments
11/19/2013	CON	VX-47	9:05:26	9:05:38	HSEA	15	340	35	1	0	Toward	SW-SE	SI		NONE	E	R	10	1	0-3 ft		
11/19/2013	CON	NA	9:14:57	9:15:17	HSEA	70	280		1	1	None	RE	LO		NONE	E	OC	0	1	0-3 ft		
11/19/2013	CON	NA	9:19:09	9:19:22	HSEA	85	35		1		Toward	SW-W	LO	SI	NONE	E	OC	0	1	0-3 ft		
11/19/2013	CON	NA	9:34:47	9:36:20	HSEA	150	180	465	1	0	Parallel	RE	SW-E	SI	NONE	E	OC	0	1	0-3 ft		
11/19/2013	CON	NA	9:49:37	9:49:39	HSEA	100	270	200	1	0	Toward	SW-NE	DI		NONE	E	OC	0	1	0-3 ft		
11/19/2013	CON	NA	9:51:21	9:51:36	HSEA	5	145	50	1	0	None	RE	SI		NONE	E	OC	0	1	0-3 ft		
11/19/2013	CON	NA	9:53:41	9:53:44	HSEA	20	270	100	1	0	Parallel	SW-W	SI		NONE	E	OC	0	1	0-3 ft		
11/19/2013	CON	NA	9:56:25	9:59:34	HSEA	80	120	140	2	0	None	RE	SI		NONE	E	OC	0	1	0-3 ft		
11/19/2013	CON	NA	10:03:56	10:04:02	HSEA	55	50	40	1	1	None	RE	SI		NONE	E	OC	0	1	0-3 ft		
11/19/2013	CON	NA	10:09:50	10:10:31	HSEA	80	120	110	3	1	Parallel	SW-N	RE	DI	NONE	E	OC	0	1	0-3 ft		1 adult and 1 juvenile fits these distances. The 3rd adult was 70 m from me and 90 m from pile previously impacted
11/19/2013	CON	NA	10:15:19	10:15:38	HSEA	125	100	90	1	0	Away	SW-SW	RE	SI	NONE	E	OC	0	1	0-3 ft		
11/19/2013	CON	NA	10:18:47	10:18:52	HSEA	150	45	55	1	0	Toward	SW-SE			NONE	E	OC	0	1	0-3 ft		
11/19/2013	CON	NA	10:23:38	10:23:43	HSEA	83	110	70	1	0	Away	SW-S	DI		NONE	E	OC	0	1	0-3 ft		
11/19/2013	CON	NA	10:26:20	10:28:09	HSEA	90	120	85	1	0	Away	SW-S			NONE	E	OC	0	1	0-3 ft		
11/19/2013	CON	NA	10:28:41	10:28:56	HSEA	100	90	120	1	0	None	RE			NONE	E	OC	0	1	0-3 ft		
11/19/2013	CON	NA	10:31:10	10:31:17	HSEA	95	140	60	1	0	None	RE	SI		NONE	E	OC	0	1	0-3 ft		
11/19/2013	CON	NA	10:32:53	10:33:07	HSEA	80	120	60	1	0	Away	SW-S			NONE	E	OC	0	1	0-3 ft		
11/19/2013	CON	NA	11:12:18	11:12:25	HSEA	60	160	150	1	1	Toward	SW-N			NONE	E	OC	0	2	0-3 ft		
11/19/2013	CON	NA	12:24:21	12:24:44	HSEA	30	225	150	1	0	Parallel	SW-NE			NONE	E	OC	0	2	0-3 ft		
11/19/2013	CON	NA	12:32:31	12:32:33	HSEA	50	340	100	1	0	None	SI	RE		NONE	E	OC	0	2	0-3 ft		
11/19/2013	CON	NA	12:41:27	12:42:36	HSEA	45	90	70	1	0	None	PL			NONE	E	OC	0	2	0-3 ft		Jumping out of the water and splashing hind flipper
11/19/2013	CON	NA	12:44:47	12:44:55	HSEA	30	10	65	1	0	Away	SW-NE	SI		NONE	E	OC	0	2	0-3 ft		
11/19/2013	CON	NA	12:46:48	12:47:07	HSEA	40	330	65	1	0	Toward	SW-SW			NONE	E	OC	0	2	0-3 ft		
11/19/2013	CON	NA	12:59:31	12:59:36	HSEA	160	90	180	1	0	Parallel	SW-N	DI		NONE	E	OC	0	2	0-3 ft		
11/19/2013	CON	NA	13:06:31	13:06:37	HSEA	22	340		1	1	None	SW-W	DI		NONE	G	R	0	1	0-3 ft		
11/19/2013	CON	NA	13:36:09	13:36:14	HSEA	100	180	220	1	0	Away	SW-E			NONE	G	R	0	1	0-3 ft		
11/19/2013	CON	NA	13:41:01	13:41:13	HSEA	42	360	170	1	0	Parallel	SW-W			NONE	G	R	0	1	0-3 ft		

Date	Event Code	Pile	Start Time	End Time	Species	Dist. To animal (m)	Dir. To animal (deg)	Dist to pile (m)	Best num of animals	Num of juv	Relative motion	Behavior 1	Behavior 2	Behavior 3	Const Type	Visi-bility	Weather	Glare (%)	BSS	Wave ht	Swell Dir	Comments
11/19/2013	CON	NA	13:53:51	13:54:00	HSEA	80	140	240	1	0	Away	SW-S			NONE	G	R	0	1	0-3 ft		
11/19/2013	CON	NA	14:29:03	14:29:37	HSEA	70	160		1	0	Toward	SW-N			NONE	E	OC	0	2	0-3 ft		
11/19/2013	CON	NA	14:49:06	14:49:15	HSEA	70	180		1	0	Away	SW-S	LO	CD	NONE	E	OC	0	2	0-3 ft		Sighted pre impact moving south through piles, as our vessel approached STSL, which then turned and looked at us slightly changing direction then proceeed south
11/19/2013	POST	X.8-42	15:02:41	15:02:47	HSEA	5	350	10	1	1	None	MI	SI		NONE	E	R	10	1	0-3 ft		
11/19/2013	POST	X.8-42	15:04:40	15:04:50	HSEA	30	180	50	2	2	None	MI	DI		NONE	E	R	10	1	0-3 ft		NEW LOCATION: 47.75259, 122.72421
11/20/2013	CON	NA	9:46:49	9:46:59	HSEA	30	80		1		None	RE	SI		NONE	E	S	0	2	0-3 ft		
11/20/2013	CON	NA	10:00:15	10:00:24	HSEA	50	95		1		None	RE			NONE	E	S	5	2	0-3 ft		
11/20/2013	CON	V-15	10:10:00	10:10:05	HSEA	30	340	24	1	1	Away	SW-N	DI		I	E	S	10	1	0-3 ft		
11/20/2013	CON	NA	10:18:47	10:18:58	HSEA	60	90		1		None	RE			NONE	E	S	5	2	0-3 ft		
11/20/2013	CON	NA	10:21:44	10:21:56	HSEA	40	260		2		None	MI			NONE	E	S	5	2	0-3 ft		
11/20/2013	CON	NA	10:24:07	10:25:51	HSEA	30	70		1	1	None	RE	SI		NONE	E	S	10	1	0-3 ft		
11/20/2013	CON	NA	10:26:38	10:26:47	HSEA	25	100		1	1	None	FO	LO	SI	NONE	E	S	5	2	0-3 ft		Surfaced with fish in mouth
11/20/2013	CON	NA	10:27:48	10:30:39	HSEA	20	340		1	1	None	LO	DI		NONE	E	S	10	1	0-3 ft		
11/20/2013	CON	NA	10:37:28	10:37:29	HSEA	40	220		1	0	Away	SW-S	DI		NONE	E	S	10	1	0-3 ft		
11/20/2013	CON	NA	10:43:45	10:44:07	HSEA	15	300		1	0	None	LO	DI		NONE	E	S	10	1	0-3 ft		
11/20/2013	CON	NA	10:46:50	10:48:19	HSEA	15	280		1	1	None	LO	DI		NONE	E	S	10	1	0-3 ft		
11/20/2013	CON	X-14	11:03:56	11:04:39	HSEA	35	30	135	1	1	None	FO	MI	LO	I	E	S	5	2	0-3 ft		
11/20/2013	CON	NA	11:06:48	11:07:01	HSEA	25	290		1	0	Away	SW-SW	DI		NONE	E	S	15	1	0-3 ft		
11/20/2013	CON	NA	11:11:28	11:11:35	HSEA	50	200		1	0	None	LO	SI		NONE	E	S	15	1	0-3 ft		
11/20/2013	CON	V-14	11:19:36	11:19:43	HSEA	40	290	30	1	0	None	SW-NE	DI		I	E	S	15	1	0-3 ft		
11/20/2013	CON	NA	11:26:17	11:28:33	HSEA	15	90		1	1	Parallel	RE	DI		NONE	E	S	15	1	0-3 ft		
11/20/2013	CON	NA	11:27:27	11:28:00	HSEA	30	270		1	1	None	RE	SI		NONE	E	S	5	2	0-3 ft		
11/20/2013	CON	NA	11:30:47	11:32:50	HSEA	25	270		1	0	None	RE	DI		NONE	E	S	15	1	0-3 ft		
11/20/2013	CON	NA	11:34:55	11:36:38	HSEA	25	280		1	0	None	RE	SI		NONE	E	S	15	1	0-3 ft		
11/20/2013	CON	NA	12:03:08	12:03:12	HSEA	40	90		1		Parallel	SW-NE			NONE	E	S	5	2	0-3 ft		
11/20/2013	CON	V-13	12:05:13	12:05:19	HSEA	50	350	60	1		Toward	SW-N			I	E	S	5	2	0-3 ft		
11/20/2013	CON	NA	12:56:00	12:56:07	HSEA	10	270		1	1	None	LO	SI		NONE	E	S	15	1	0-3 ft		
11/20/2013	CON	X-13	13:04:00	13:04:02	HSEA	28	290	25	1	1	Away	LO	SW-NW	DI	NONE	E	S	15	1	0-3 ft		

Date	Event Code	Pile	Start Time	End Time	Species	Dist. To animal (m)	Dir. To animal (deg)	Dist to pile (m)	Best num of animals	Num of juv	Relative motion	Behavior 1	Behavior 2	Behavior 3	Const Type	Visi-bility	Weather	Glare (%)	BSS	Wave ht	Swell Dir	Comments
11/20/2013	CON	NA	13:04:01	13:04:15	HSEA	40	350		1		Parallel	SW-N	LO		NONE	E	S	5	2	0-3 ft		
11/20/2013	CON	NA	13:23:23	13:23:34	HSEA	70	50		1		None	RE	SI		NONE	E	S	5	2	0-3 ft		
11/20/2013	CON	NA	13:37:14	13:37:20	HSEA	25	40		1	1	None	RE	LO	SI	NONE	E	S	5	2	0-3 ft		
11/20/2013	CON	NA	13:41:03	13:41:38	HSEA	100	45		1		None	RE	SI		NONE	E	S	5	2	0-3 ft		Likely same ind as #13
11/20/2013	CON	NA	13:48:41	13:48:54	HSEA	120	160		1	0	None	RE	SI		NONE	E	S	15	1	0-3 ft		
11/20/2013	CON	NA	13:54:37	13:55:09	HSEA	100	160		1		None	RE	SI		NONE	E	S	5	2	0-3 ft		
11/20/2013	CON	NA	14:02:18	14:02:32	HSEA	140	200		1	0	Parallel	SW-W	DI		NONE	E	S	15	1	0-3 ft		
11/20/2013	CON	NA	14:03:45	14:03:50	HSEA	70	280		1		None	LO			NONE	E	S	5	2	0-3 ft		
11/20/2013	CON	NA	14:20:54	14:21:16	HSEA	100	270		1		None	LO			NONE	E	S	5	2	0-3 ft		
11/20/2013	CON	NA	14:36:12	14:36:23	HSEA	40	340		1		None	RE	DI		NONE	E	S	15	1	0-3 ft		
11/20/2013	CON	V.X-58	14:52:55	14:53:11	HSEA	90	290	150	1		None	RE	SI		V	E	S	5	2	0-3 ft		north rig
11/20/2013	CON	V.X-58	14:59:06	15:00:05	HSEA	20	350	135	1	1	None	LO	SI		V	E	S	5	2	0-3 ft		north rig
11/20/2013	CON	V.X-58	15:07:45	15:07:52	HSEA	40	280	150	1	1	Parallel	SW-W	LO	DI	V	E	S	5	2	0-3 ft		north rig
11/20/2013	CON	V.X-58	15:11:56	15:12:00	HSEA	80	250	50	1	0	Parallel	SW-N	DI		V	E	S	15	1	0-3 ft		
11/20/2013	CON	V.X-58	15:16:50	15:23:05	HSEA	10	180	165	1	1	None	RE	SI	SW-NW	V	E	S	5	2	0-3 ft		north rig, prob resight of #19-20, surfaced during vibe, resurfaced just west of vessel heading nw, then again within 20m of vessel, milling and looking
11/20/2013	POST	NA	15:42:53	15:42:58	HSEA	80	45	65	1	0	None	RE	SI		NONE	E	S	5	2	0-3 ft		Nose in the air, resting until the Obsever was seen
11/21/2013	PRE	NA	8:37:20	8:37:45	HSEA	175	230	175	1	0	Away	SW-SE	LO	DI	NONE	E	S	0	1	0-3 ft		
11/21/2013	PRE	NA	8:46:27	8:46:32	HSEA	75	260	75	1	0	None	LO	DI		NONE	E	S	0	1	0-3 ft		
11/21/2013	MS	V-10	9:42:05	9:42:48	HSEA	150	180	22	1	1	Away	PO	CD	MI	NONE	E	S	5	1	0-3 ft		Animal initially porpoising rapidly then changed direction, surfaced looking then appeared to be foraging near surface
11/21/2013	MS	V-10	9:43:52	9:43:57	HSEA	100	90	15	1		Toward	SW-E			NONE	E	S	5	1	0-3 ft		Shutdown when animal surfaced in to zone. Resumed work after sighting animal outside zone.
11/21/2013	CON	V-10	9:47:11	9:47:23	HSEA	50	20	60	1		Away	SW-N			I	E	S	5	1	0-3 ft		
11/21/2013	CON	V-10	9:49:02	9:49:31	HSEA	16	180	180	1	1	Away	SW-S	LO		NONE	E	S	5	1	0-3 ft		
11/21/2013	CON	NA	9:56:05	9:56:36	HSEA	20	300		1	1	None	RE	LO	DI	NONE	E	S	0	1	0-3 ft		
11/21/2013	CON	NA	10:01:04	10:01:14	HSEA	60	90	80	1	1	Parallel	LO	SW-SE		NONE	E	S	5	1	0-3 ft		
11/21/2013	MS	V-12	10:07:52	10:08:35	HSEA	60	10	35	1	1	Toward	SW-NE	LO		NONE	E	S	5	1	0-3 ft		
11/21/2013	CON	V-12	10:14:09	10:14:22	HSEA	20	300	145	1	1	Away	SW-W	LO	DI	I	E	S	5	1	0-3 ft		

Date	Event Code	Pile	Start Time	End Time	Species	Dist. To animal (m)	Dir. To animal (deg)	Dist to pile (m)	Best num of animals	Num of juv	Relative motion	Behavior 1	Behavior 2	Behavior 3	Const Type	Visi-bility	Weather	Glare (%)	BSS	Wave ht	Swell Dir	Comments
11/21/2013	CON	NA	10:31:44	10:45:38	HSEA	60	90	100	1		None	RE	LO	DI	NONE	E	S	5	1	0-3 ft		resurfaced same general area, resting, resurfaced again south of previous location, milling around piles at south end
11/21/2013	CON	X-11	11:04:17	11:04:24	HSEA	160	45	150	1		Away	SW-E	DI		I	E	S	5	1	0-3 ft		near beach
11/21/2013	CON	X-10	11:16:59	11:17:12	HSEA	130	30	100	1		Away	SW-E	DI		I	E	S	5	1	0-3 ft		was at surface when impact began, dove heading away toward beach
11/21/2013	CON	x-10	11:19:50	11:19:54	HSEA	115	180	160	1		None	LO	SI		NONE	E	S	5	1	0-3 ft		
11/21/2013	CON	NA	11:29:16	11:33:01	HSEA	120	90	10	2	2	None	LO	MI		NONE	E	S	5	1	0-3 ft		Both seals last sighted approx 30-35m south of next pile
11/21/2013	CON	x-9	11:36:37	11:36:58	HSEA	110	60	40	1		Toward	SW-NW	DI		I	E	S	5	1	0-3 ft		
11/21/2013	CON	NA	11:46:55	11:47:06	HSEA	130	30		1		Toward	SW-E	DI		NONE	E	S	5	1	0-3 ft		
11/21/2013	CON	NA	13:44:40	13:44:49	HSEA	20	330		1	1	None	RE	LO	DI	NONE	E	S	5	1	0-3 ft		
11/21/2013	CON	NA	13:52:26	13:52:38	HSEA	45	260		1	0	Parallel	SW-N			NONE	E	S	10	1	0-3 ft		Moved to Rig 1 for vibratory driving
11/21/2013	CON	NA	13:54:30	13:54:37	HSEA	5	10		1	1	None	SW-N	LO	DI	NONE	E	S	5	1	0-3 ft		
11/21/2013	CON	NA	13:58:13	13:58:47	HSEA	70	290		1		None	LO	DI		NONE	E	S	5	1	0-3 ft		
11/21/2013	CON	NA	14:03:37	14:03:39	HSEA	40	80		1	1	None	RE			NONE	E	S	0	1	0-3 ft		
11/21/2013	CON	NA	14:09:44	14:10:03	HSEA	50	170		1	0	Parallel	SW-W	DI		NONE	E	S	5	1	0-3 ft		
11/21/2013	CON	NA	14:10:12	14:11:18	HSEA	50	5		1	1	Toward	SW-N			NONE	E	S	0	1	0-3 ft		
11/21/2013	CON	NA	14:11:03	14:11:28	HSEA	40	300		1	0	Away	SW-N	DI		NONE	E	S	5	1	0-3 ft		
11/21/2013	CON	V.X-60	14:17:44	14:19:42	HSEA	10	5	80	1	1	Away	LO	DI		V	E	S	0	1	0-3 ft		surfaced 5 metrs from the boat, resting. Then a small twirl and dove.
11/21/2013	CON	V.X-60	14:26:22	14:26:33	HSEA	55	10	40	1		None	LO	DI		V	E	S	0	1	0-3 ft		
11/21/2013	CON	V.X-60	14:31:08	14:31:14	CASL	130	280	95	1		Parallel	SW-N			V	E	S	0	1	0-3 ft		
11/21/2013	CON	V.X-60	14:34:46	14:35:15	HSEA	35	350	60	1	1	None	RE	LO	SI	V	E	S	0	1	0-3 ft		
11/21/2013	CON	NA	14:37:28	14:38:01	HSEA	50	180		1	0	None	MI	DI		NONE	E	S	15	1	0-3 ft		
11/21/2013	POST	NA	14:37:31	14:37:51	HSEA	50	0		1	1	None	RE	LO		NONE	E	S	0	1	0-3 ft		
11/21/2013	CON	NA	14:43:00	14:43:06	HSEA	60	80		1	0	Parallel	RE	DI		NONE	E	S	15	1	0-3 ft		
11/21/2013	CON	NA	14:47:25	14:47:46	HSEA	5	170		1	1	None	MI	DI		NONE	E	S	15	1	0-3 ft		
11/21/2013	POST	NA	14:52:22	14:52:34	HSEA	120	180		1		None	RE	SI		NONE	E	S	5	1	0-3 ft		
11/22/2013	PRE	NA	10:08:18	10:08:46	HSEA	15	280		1	1	None	LO	SI		NONE	E	S	0	2	0-3 ft		
11/22/2013	PRE	NA	10:13:41	10:14:04	HSEA	35	280		1	1	None	LO	SI		NONE	E	S	0	2	0-3 ft		
11/22/2013	PRE		10:17:50	10:17:57	HSEA	10	270	30	1	0	Toward	SW-S	DI		NONE	E	S	15	1	0-3 ft		

Date	Event Code	Pile	Start Time	End Time	Species	Dist. To animal (m)	Dir. To animal (deg)	Dist to pile (m)	Best num of animals	Num of juv	Relative motion	Behavior 1	Behavior 2	Behavior 3	Const Type	Visi-bility	Weather	Glare (%)	BSS	Wave ht	Swell Dir	Comments
11/22/2013	PRE	NA	10:19:57	10:20:03	HSEA	40	30		1	1	None	LO	SI		NONE	E	S	0	2	0-3 ft		
11/22/2013	PRE	NA	10:21:01	10:21:09	HSEA	50	0		1		Toward	SW-SW	DI		NONE	E	S	0	2	0-3 ft		
11/22/2013	PRE	NA	10:25:34	10:25:36	HSEA	50	180		1		None	LO	SI		NONE	E	S	0	2	0-3 ft		
11/22/2013	CON	NA	10:31:20	10:31:21	CASL	75	270	75	1	0	Parallel	SW-S	DI		NONE	E	S	15	1	0-3 ft		
11/22/2013	CON	NA	10:40:35	10:43:20	HSEA	40	270	50	1	1	None	LO	DI	RE	NONE	E	S	15	1	0-3 ft		
11/22/2013	CON	NA	10:49:17	10:49:22	HSEA	60	90		1	1	Toward	SW-N	LO		NONE	E	S	5	2	0-3 ft		
11/22/2013	CON	NA	10:50:25	10:50:30	HSEA	25	250	20	1	0	Away	SW-NW			NONE	E	S	15	1	0-3 ft		
11/22/2013	CON	V.X-60	10:53:13	10:53:33	HSEA	10	280	30	1	1	None	LO	SI		I	E	S	15	1	0-3 ft		
11/22/2013	CON	V.X-60	10:55:34	10:55:50	HSEA	10	250	25	1	1	None	SI	DI		I	E	S	15	1	0-3 ft		
11/22/2013	CON	V.X-60	10:57:35	10:58:01	HSEA	15	270	25	1	1	None	LO	SI		I	E	S	15	1	0-3 ft		
11/22/2013	CON	V.X-60	10:59:54	11:00:20	HSEA	15	330	30	1	1	Parallel	SW-E	SI		I	E	S	15	1	0-3 ft		
11/22/2013	CON	V.X-60	11:00:05	11:00:12	HSEA	70	90	50	1	1	None	MI	LO		I	E	S	5	2	0-3 ft		milling around dive boat
11/22/2013	CON	V.X-60	11:02:26	11:04:09	HSEA	15	270	25	1	1	None	LO	SI		I	E	S	15	1	0-3 ft		
11/22/2013	CON	NA	11:03:39	11:04:08	HSEA	70	290	50	1		None	LO			NONE	E	S	5	2	0-3 ft		observed at surface during impact, still at surface when impact ended
11/22/2013	CON	NA	11:13:40	11:13:49	HSEA	77	345	12	1	0	None	RE			NONE	E	S	5	2	0-3 ft		
11/22/2013	CON	NA	11:39:44	11:40:40	HSEA	35	355	23	2	2	None	MI			NONE	E	S	5	2	0-3 ft		
11/22/2013	CON	NA	11:48:27	11:48:40	HSEA	80	15	200	1	1	None	RE			NONE	E	S	5	2	0-3 ft		
11/22/2013	CON	NA	11:50:22	11:50:26	HSEA	100	280	200	1	0	Toward	SW-N			NONE	E	S	5	2	0-3 ft		
11/22/2013	CON	NA	12:29:46	12:29:52	HSEA	25	0	80	1	0	None	RE	SI		NONE	E	S	5	1	0-3 ft		
11/22/2013	CON	NA	12:47:51	12:48:06	HSEA	110	0		1		Away	SW-NE			NONE	E	S	5	1	0-3 ft		
11/22/2013	CON	NA	12:54:27	12:54:38	HSEA	100	90		1		None	RE	LO		NONE	E	S	5	1	0-3 ft		
11/22/2013	CON	NA	13:14:56	13:15:04	HSEA	80	320		1		None	LO			NONE	E	S	5	1	0-3 ft		
11/22/2013	CON	NA	13:53:22	13:53:24	HSEA	75	45		1	0	None	DI			NONE	E	PC	5	1	0-3 ft		
11/22/2013	CON	NA	13:56:38	13:56:48	HSEA	120	180		1	0	None	RE	SI		NONE	E	PC	5	1	0-3 ft		
11/22/2013	CON	NA	14:01:44	14:01:50	HSEA	125	330		1	0	Parallel	SW-E			NONE	E	PC	5	1	0-3 ft		
11/22/2013	CON	NA	14:31:40	14:32:23	HSEA	100	250		1	0	None	RE			NONE	E	PC	5	1	0-3 ft		
11/22/2013	CON	NA	15:06:12	15:06:16	HSEA	23	123	45	1	1	Parallel	SW-NE			NONE	E	PC	5	1	0-3 ft		
11/22/2013	CON	NA	15:15:57	15:16:01	HSEA	36	165	67	1	1	None	MI			NONE	E	PC	5	1	0-3 ft		
11/23/2013	CON	NA	8:22:47	8:22:56	HSEA	35	350		1		Toward	SW-N	LO		NONE	E	PC	0	1	0-3 ft		
11/23/2013	CON	NA	8:25:19	8:25:43	HSEA	55	65		1		None	MI			NONE	E	PC	0	1	0-3 ft		
11/23/2013	CON	T-21	8:26:33	8:28:29	HSEA	20	280	20	1	1	Toward	SW-W	SW-N		NONE	E	S	0	1	0-3 ft		

Date	Event Code	Pile	Start Time	End Time	Species	Dist. To animal (m)	Dir. To animal (deg)	Dist to pile (m)	Best num of animals	Num of juv	Relative motion	Behavior 1	Behavior 2	Behavior 3	Const Type	Visi-bility	Weather	Glare (%)	BSS	Wave ht	Swell Dir	Comments
11/23/2013	CON	T-21	8:37:07	8:37:10	HSEA	5	280	25	1	1	None	LO	RE	DI	NONE	E	S	0	1	0-3 ft		
11/23/2013	CON	vx-59	8:43:23	8:43:39	HSEA	180	150	300	1		None	RE			V	E	PC	0	1	0-3 ft		
11/23/2013	CON	V.X-59	8:53:44	8:53:49	HSEA	75	200	65	1	0	None	RE			V	E	PC	5	1	0-3 ft		
11/23/2013	CON	V.X-49	8:57:20	8:57:33	HSEA	35	270	55	1	1	Parallel	SW-S	SW-NE		V	E	PC	0	1	0-3 ft		
11/23/2013	CON	NA	9:35:32	9:37:41	HSEA	45	90		1		None	MI	LO		NONE	E	PC	0	1	0-3 ft		Appeared to be foraging, moving rapidly just below surface around a pile
11/23/2013	CON	NA	9:40:24	9:40:41	HSEA	80	100		1		Away	SW-S			NONE	E	PC	0	1	0-3 ft		
11/23/2013	CON	NA	10:00:30	10:00:32	HSEA	45	355	56	1	1	None	MI			NONE	E	PC	0	1	0-3 ft		
11/23/2013	OTHR	NA	10:06:15	10:06:20	STSL				9	0	None	RE			OTHER	E	PC	0	1	0-3 ft		East end of north Delta package
11/23/2013	OTHR	NA	10:08:24	10:08:25	CASL				11	0	None	RE	SI		OTHER	E	PC	0	1	0-3 ft		
11/23/2013	OTHR	NA	10:14:35	10:14:37	STSL				2	0	None				OTHER	E	PC	0	1	0-3 ft		Located east end of north package at Delta
11/23/2013	OTHR	NA	10:17:10	10:17:13	CASL				9	0		RE			OTHER	E	PC	0	1	0-3 ft		Located east end of north package at Delta
11/23/2013	OTHR	NA	10:17:56	10:19:30	CASL				45	0		RE			OTHER	E	PC	0	1	0-3 ft		Located on the WRA fence
11/23/2013	OTHR	NA	10:19:31	10:19:32	STSL				1	0		RE			OTHER	E	PC	0	1	0-3 ft		Resting on WRA floats
11/23/2013	OTHR	NA	10:23:32	10:23:33	CASL				2	0		RE			OTHER	E	PC	0	1	0-3 ft		North end of package at Marginal
11/23/2013	CON	NA	10:38:23	10:38:42	HSEA		132		1	0	None	RE			NONE	E	PC	0	1	0-3 ft		
11/23/2013	CON	NA	10:42:48	10:43:05	HSEA	37	90	108	1	1	None	RE			NONE	E	PC	0	1	0-3 ft		
11/23/2013	CON	NA	10:52:00	10:52:05	HSEA	67	113	135	1	1	None	MI			NONE	E	PC	0	1	0-3 ft		
11/23/2013	CON	NA	11:14:42	11:14:45	HSEA	55	112	135	1	0	None	MI			NONE	E	PC	0	1	0-3 ft		
11/23/2013	CON	NA	11:17:49	11:18:04	HSEA	56	135	56	1	1	None	MI			NONE	E	PC	0	1	0-3 ft		
11/23/2013	CON	NA	11:53:34	11:53:45	HSEA	100	230		1	0	Away	SW-S			NONE	E	PC	0	1	0-3 ft		
11/23/2013	CON	NA	11:53:47	11:53:48	HSEA	10	180		1	0	None	LO			NONE	E	PC	0	1	0-3 ft		
11/23/2013	CON	NA	12:47:53	12:48:28	HSEA	15	90		1	1	None	LO	SI		NONE	E	PC	2	1	0-3 ft		
11/23/2013	CON	NA	13:04:15	13:04:27	HSEA	120	75		1		Away	SW-E	SI		NONE	E	PC	2	1	0-3 ft		
11/23/2013	CON	NA	13:48:58	13:49:18	HSEA	90	160		1		Parallel	SW-N			NONE	E	PC	5	1	0-3 ft		
11/23/2013	CON	NA	13:49:21	13:49:25	HSEA	80	350		1		Parallel	SW-N	DI		NONE	E	PC	5	1	0-3 ft		
11/23/2013	CON	NA	13:55:07	13:55:22	HSEA	20	330	40	1	1	None	RE	SI		NONE	E	PC	5	1	0-3 ft		
11/23/2013	CON	V.X-59	14:05:51	14:06:05	HSEA	15	330	35	1	0	Away	SW-N	LO		SSI	E	PC	5	1	0-3 ft		
11/23/2013	CON	V.X-59	14:08:59	14:09:01	HSEA	8	320	30	1	1	None	LO	SI		I	E	PC	5	1	0-3 ft		
11/23/2013	CON	V.X-59	14:14:01	14:14:19	HSEA	10	340	40	1	1	None	RE			I	E	PC	5	1	0-3 ft		

Date	Event Code	Pile	Start Time	End Time	Species	Dist. To animal (m)	Dir. To animal (deg)	Dist to pile (m)	Best num of animals	Num of juv	Relative motion	Behavior 1	Behavior 2	Behavior 3	Const Type	Visi-bility	Weather	Glare (%)	BSS	Wave ht	Swell Dir	Comments
11/23/2013	MS	V.X-59	14:17:15	14:17:41	HSEA	20	240	15	1	1	Away	LO	SI	SW-N	NONE	E	PC	5	1	0-3 ft		Shutdown work when animal surfaced within shutdown zone, resumed work when we saw animal swim out of zone
11/23/2013	POST	VX-59	14:20:24	14:20:25	HSEA	10	260	19	1	1	Away	SW-N			NONE	E	PC	5	1	0-3 ft		
11/23/2013	POST	V.X-59	14:23:40	14:24:24	HSEA	75	200	15	1	1	None	RE			NONE	E	PC	5	1	0-3 ft		
11/23/2013	POST	NA	14:31:30	14:31:52	HSEA	35	270		2	2	None	MI	DI		NONE	E	PC	5	1	0-3 ft		
11/23/2013	POST	NA	14:37:14	14:37:41	HSEA	15	0		2	2	None	MI	LO	DI	NONE	E	PC	5	1	0-3 ft		
11/23/2013	POST	NA	14:43:24	14:43:37	HSEA	70	270		1		Toward	SW-N	DI		NONE	E	PC	5	1	0-3 ft		
11/25/2013	PRE	NA	9:19:30	9:19:53	HSEA	110	80		1		Away	SW-S			NONE	E	S	5	1	0-3 ft		
11/25/2013	CON	NA	9:52:09	9:52:48	CASL	90	90		2		Away	SW-S			NONE	E	S	5	1	0-3 ft		
11/25/2013	CON	NA	10:02:50	10:02:56	HSEA	75	100		1		Toward	SW-N	DI		NONE	E	S	5	1	0-3 ft		
11/25/2013	CON	NA	10:10:00	10:10:13	HSEA	60	0		1		None	RE			NONE	E	S	5	1	0-3 ft		
11/25/2013	CON	NA	10:40:02	10:40:09	HSEA	10	35	70	1	1	Away	SW-W			NONE	E	S	5	1	0-3 ft		
11/25/2013	CON	NA	10:43:13	10:43:19	HSEA	33	270	15	1	0	Away	SW-W			NONE	E	S	0	1	0-3 ft		
11/25/2013	CON	NA	10:48:29	10:48:51	HSEA	55	90	110	1		Away	SW-S			NONE	E	S	5	1	0-3 ft		
11/25/2013	CON	NA	10:48:54	10:49:28	HSEA	25	210	120	1		Away	SW-S			NONE	E	S	5	1	0-3 ft		
11/25/2013	CON	NA	10:51:18	10:51:35	HSEA	25	110	130	1		Parallel	SW-E	DI		NONE	E	S	5	1	0-3 ft		
11/25/2013	CON	NA	11:00:42	11:01:07	HSEA	100	180	200	1		Away	SW-S			NONE	E	S	5	1	0-3 ft		
11/25/2013	CON	NA	11:03:21	11:03:33	HSEA	60	70	80	1		Toward	SW-N	LO	DI	NONE	E	S	5	1	0-3 ft		
11/25/2013	CON	NA	11:18:50	11:19:04	HSEA	70	280	105	1		Toward	SW-N			NONE	E	S	5	1	0-3 ft		
11/25/2013	CON	NA	11:43:29	11:43:39	HSEA	20	65	95	1	1	Away	SW-S	DI		NONE	E	PC	5	1	0-3 ft		
11/25/2013	CON	NA	11:53:35	11:54:40	HSEA	125	330	100	1		Parallel	MI	LO		NONE	E	PC	5	1	0-3 ft		
11/25/2013	CON	NA	11:58:10	11:58:34	HSEA	45	320	90	1		None	MI			NONE	E	PC	5	1	0-3 ft		
11/25/2013	CON	NA	12:15:21	12:15:49	HSEA	75	270	110	1		None	MI	LO		NONE	E	PC	5	1	0-3 ft		
11/25/2013	CON	V.X-57	12:57:07	12:57:21	HSEA	68	345	89	1	0	Away	SW-NW	SI		V	E	S	0	1	0-3 ft		
11/25/2013	POST	NA	13:12:23	13:12:28	HSEA	35	10	56	1	0	None	LO	SI		NONE	E	S	0	1	0-3 ft		
11/25/2013	POST	NA	13:30:14	13:30:26	HSEA	15	270	110	1	1	None	MI	LO	DI	NONE	E	PC	5	1	0-3 ft		circling a pile rapidly on its back, possibly foraging
11/26/2013	OTHR	NA	10:50:57	10:51:06	CASL				40			RE			OTHER	E	S	0	1	0-3 ft		2 hauled out on vessel Delta north, others on wra fence, no stsl
11/26/2013	PRE	NA	11:01:46	11:02:29	CASL	20	180		1		Away	SW-S			NONE	E	S	5	1	0-3 ft		

Date	Event Code	Pile	Start Time	End Time	Species	Dist. To animal (m)	Dir. To animal (deg)	Dist to pile (m)	Best num of animals	Num of juv	Relative motion	Behavior 1	Behavior 2	Behavior 3	Const Type	Visi-bility	Weather	Glare (%)	BSS	Wave ht	Swell Dir	Comments
11/26/2013	CON	NA	11:34:01	11:34:14	HSEA	70	0		1		None	RE			NONE	E	S	5	1	0-3 ft		
11/26/2013	CON	NA	11:36:00	11:36:08	HSEA	60	270		1	1	None	MI	LO		NONE	E	S	5	1	0-3 ft		
11/26/2013	CON	NA	12:04:18	12:04:59	HSEA	37	90	200	1	1	Away	SW-SE			NONE	E	S	5	1	0-3 ft		
11/26/2013	CON	V.X-50	13:10:30	13:10:42	HSEA	80	200	25	1	0	Away	SW-S			V	E	S	0	1	0-3 ft		
11/26/2013	CON	V.X-50	13:24:09	13:26:09	HSEA	85	290	90	1	1	Toward	SW-NE	MI	SI	V	E	OC	0	1	0-3 ft		
11/26/2013	CON	V.X-50	13:27:18	13:27:34	HSEA	120	275	100	1	0	Parallel	SW-N			V	E	S	0	1	0-3 ft		
11/26/2013	POST	NA	13:47:09	13:47:14	HSEA	26	270	43	1	1	None	MI			NONE	E	OC	0	1	0-3 ft		
11/27/2013	CON	N-9	14:32:34	14:32:51	HSEA	5	90	25	1	1	None	MI			NONE	G	S	0	1	0-3 ft		
11/27/2013	CON	N-9	14:54:26	14:54:43	HSEA	5	85	30	1	1	None	MI	DI		NONE	G	S	0	1	0-3 ft		
11/27/2013	CON	NA	15:06:43	15:06:50	HSEA	105	275	60	1	0	Parallel	SW-N			NONE	E	S	5	1	0-3 ft		
11/27/2013	CON	NA	15:09:12	15:09:30	HSEA	60	330	17	1	0	Toward	SW-SW	SI		NONE	E	S	5	1	0-3 ft		
12/2/2013	PRE	NA	10:22:29	10:22:49	HSEA	55	0	150	1	1	None	MI	SI		NONE	G	S	0	1	0-3 ft		
12/2/2013	CON	N-9	10:51:09	10:51:13	HSEA	55	180	95	1	1	None	LO	RE	SI	V	G	S	20	1	0-3 ft		
12/2/2013	CON	N-9	11:03:13	11:03:21	HSEA	80	180	30	1	0	Toward	SW-SE			NONE	E	PC	0	1	0-3 ft		
12/2/2013	CON		11:16:25	11:16:34	HSEA	85	200		1	0	Parallel	SW-W			NONE	E	PC	0	1	0-3 ft		
12/2/2013	CON	NA	11:22:02	11:22:19	HSEA	10	270		1	1	Away	SW-N	DI		NONE	E	PC	0	1	0-3 ft		
12/3/2013	CON	VX-49	11:01:03	11:01:23	HSEA	45	300	70	1	1	Away	RE	DI		V	E	S	0	2	0-3 ft		
12/3/2013	CON	VX-49	23:17:31	23:17:44	HSEA	35	344	30	1	0	None	LO	DI		V	E	S	20	1	0-3 ft		
12/4/2013	PRE		8:34:04	8:34:09	HSEA	5	180		1	1	None	LO	RE	SI	NONE	E	S	20	1	0-3 ft		
12/4/2013	CON	T-19	9:13:21	9:13:25	HSEA	10	180	175	1	0	None	FL			NONE	E	PC	0	2	0-3 ft		
12/4/2013	CON	T-19	9:16:33	9:16:35	HSEA	30	330	25	1	1	None	LO			I	E	S	20	1	0-3 ft		
12/4/2013	CON	T-19	9:24:26	9:24:32	HSEA	40	270	50	1	1	None	LO	DI		NONE	E	S	20	1	0-3 ft		
12/4/2013	CON	T-20	9:48:19	9:48:21	HSEA	20	90	50	1	0	None	LO	DI		I	E	S	10	1	0-3 ft		
12/4/2013	CON	T-21	10:28:18	10:28:26	HSEA	35	310	25	1	1	Toward	SW-N			I	E	S	20	1	0-3 ft		
12/4/2013	CON	T-16	11:07:05	11:07:10	HSEA	22	95	15	1	1	None	FL	SI		NONE	E	S	0	1	0-3 ft		
12/4/2013	CON	T-16	11:22:46	11:23:00	HSEA	50	270	35	1	1	Toward	SW-NE			I	E	S	20	1	0-3 ft		
12/4/2013	MS	T-16	11:26:00	11:26:19	HSEA	25	270	15	1	1	None	LO			NONE	E	S	20	1	0-3 ft		Shutdown work when animal surfaced within shutdown zone, resumed work when we saw animal swim out of zone
12/4/2013	CON	NA	11:43:08	11:43:11	HSEA	50	270	100	1	0	None	RE	SI		NONE	E	S	5	1	0-3 ft		
12/4/2013	CON	NA	11:56:00	11:56:10	HSEA	50	340		1	0	Parallel	SW-N			NONE	E	S	5	1	0-3 ft		
12/4/2013	CON	NA	13:19:00	13:19:10	HSEA	100	280		1	0	None	SW-S	DI		NONE	E	S	5	1	0-3 ft		
12/4/2013	CON	VX-52	13:57:56	13:57:57	HSEA	20	90	50	1	0	None	LO	SI		V	E	S	10	1	0-3 ft		
12/4/2013	CON	VX-52	14:04:00	14:04:11	HSEA	40	80	60	1	1	Away	SW-S	DI		V	E	S	10	1	0-3 ft		
12/4/2013	CON	NA	14:17:26	14:17:31	HSEA	40	340		1	1	None	RE	SI		NONE	E	S	10	1	0-3 ft		

Date	Event Code	Pile	Start Time	End Time	Species	Dist. To animal (m)	Dir. To animal (deg)	Dist to pile (m)	Best num of animals	Num of juv	Relative motion	Behavior 1	Behavior 2	Behavior 3	Const Type	Visi-bility	Weather	Glare (%)	BSS	Wave ht	Swell Dir	Comments
12/4/2013	CON	NA	14:23:24	14:23:45	HSEA	75	20		1	1	Away	SW-E	DI		NONE	E	S	10	1	0-3 ft		
12/4/2013	CON	NA	14:29:02	14:29:13	HSEA	40	340		1	1	None	RE	DI		NONE	E	S	10	1	0-3 ft		
12/4/2013	CON	NA	14:43:09	14:43:37	HSEA	30	280		1	0	None	RE	SI		NONE	E	S	0	1	0-3 ft		
12/4/2013	CON	X-8	14:55:28	14:55:30	HSEA	70	300	60	1	0	Toward	SW-S			I	E	S	0	1	0-3 ft		
12/5/2013	PRE	NA	8:32:23	8:35:20	CASL	120	0	250	1	0	Parallel	SW-N			NONE	E	PC	0	1	0-3 ft		
12/5/2013	CON	VX-52	10:21:01	10:21:04	HSEA	25	45	70	1	0	Parallel	RE	DI		NONE	E	PC	20	1	0-3 ft		
12/5/2013	CON	VX-52	10:28:57	10:29:21	HSEA	30	120	50	1	0	None	RE	DI		NONE	E	PC	20	1	0-3 ft		
12/5/2013	CON	NA	10:33:08	10:03:35	HSEA	40	110	150	1	1	None	RE			NONE	E	PC	0	1	0-3 ft		
12/5/2013	CON	VX-52	10:35:01	10:35:14	HSEA	50	170	65	1	0	Away	SW-E			NONE	E	PC	20	1	0-3 ft		
12/5/2013	CON	VX-52	10:47:13	10:47:32	HSEA	95	30	120	1	0	Away	SW-N	DI		NONE	E	PC	20	1	0-3 ft		
12/5/2013	MS	VX-52	11:25:51	11:26:10	HSEA	35	250	9	1	1	Parallel	RE	DI		NONE	E	PC	20	1	0-3 ft		Shutdown work when animal surfaced within shutdown zone, resumed work when we saw animal swim out of zone
12/5/2013	CON	VX-52	11:39:26	11:39:42	HSEA	10	275	35	1	0	Parallel	SW-E	SI		I	E	PC	0	1	0-3 ft		
12/5/2013	CON	VX-52	12:40:39	12:40:46	HSEA	30	80	125	1	0	Parallel	SW-N	DI		NONE	E	OC	0	1	0-3 ft		
12/6/2013	CON	N-11	9:09:08	9:09:31	HSEA	12	280	10	1	0	Toward	RE	SI		NONE	E	PC	0	1	0-3 ft		
12/6/2013	CON	N-11	9:32:43	9:32:51	HSEA	9	230	15	1	0	None	UN			NONE	E	PC	0	1	0-3 ft		Quick splash at the surface
12/6/2013	CON	N-11	9:50:00	9:50:15	HSEA	150	180	70	1	1	Toward	SW-E			NONE	E	S	10	1	0-3 ft		Right after vibe
12/7/2013	CON	VX-51	8:45:50	8:46:06	HSEA	30	360	65	1	0	Away	SW-N	DI		V	M	S	20	2	0-3 ft		
12/7/2013	PRE	VX-51	11:32:01	11:33:00	HSEA	5	180	200	1	0	None	RE	DI		NONE	E	R	20	2	0-3 ft		
12/7/2013	CON	VX-51	11:33:38	11:35:14	HSEA	30	270	15	1	1	None	LO	SI		NONE	E	S	5	2	0-3 ft		
12/7/2013	CON	VX-51	12:00:10	12:00:16	HSEA	50	30	50	1	0	Parallel	SW-W	DI		I	E	PC	0	1	0-3 ft		
12/9/2013	CON	V-7	13:17:54	13:18:38	CASL	150	90	150	1	0	Parallel	TR-N			NONE	E	PC	0	1	0-3 ft		
12/9/2013	CON	V-7	13:26:34	13:26:47	HSEA	50	90	50	1	1	Parallel	SW-S	DI		NONE	E	PC	0	1	0-3 ft		
12/9/2013	CON	V-7	13:35:03	13:36:01	HSEA	100	350	225	1	0	Away	SW-N	SI		NONE	E	PC	0	1	0-3 ft		
12/9/2013	CON	V-7	13:47:28	13:48:10	HSEA	200	270	300	1	0	None	RE			NONE	E	PC	0	1	0-3 ft		
12/9/2013	CON	V-7	13:49:50	13:50:42	HSEA	100	150	100	1	0	Toward	SW-NE			NONE	E	PC	0	1	0-3 ft		
12/9/2013	CON	V-7	14:02:49	14:03:11	HSEA	80	210	150	1	0	Parallel	RE	SI		NONE	E	PC	0	1	0-3 ft		
12/9/2013	CON	V-7	14:14:18	14:15:12	HSEA	80	70	30	1	0	Toward	RE			NONE	E	PC	0	1	0-3 ft		
12/9/2013	CON	V-7	14:26:08	14:26:24	HSEA	50	330	30	1	1	Parallel	SW-S			NONE	E	S	5	2	0-3 ft		
12/9/2013	CON	X-7	14:33:52	14:35:21	HSEA	80	90	200	1	0	Parallel	SW-N	DI		NONE	E	PC	0	1	0-3 ft		

Date	Event Code	Pile	Start Time	End Time	Species	Dist. To animal (m)	Dir. To animal (deg)	Dist to pile (m)	Best num of animals	Num of juv	Relative motion	Behavior 1	Behavior 2	Behavior 3	Const Type	Visi-bility	Weather	Glare (%)	BSS	Wave ht	Swell Dir	Comments
12/9/2013	CON	X-07	14:35:08	14:35:11	HSEA	28	280	30	1	1	Away	LO	DI		NONE	E	OC	0	1	0-3 ft		
12/9/2013	CON	X-7	14:48:23	14:49:05	HSEA	30	270	50	1	0	None	MI			NONE	E	PC	0	1	0-3 ft		
12/9/2013	CON	X-6	14:56:06	14:56:07	HSEA	53	0	50	1	0	None	MI	SI		I	E	PC	0	1	0-3 ft		
12/9/2013	CON	X-6	14:57:51	14:58:29	HSEA	20	0	70	1	0	Toward	MI			I	E	PC	0	1	0-3 ft		
12/9/2013	CON	X-6	14:58:25	14:58:31	HSEA	45	15	55	1	1	Away	SW-NE	DI		I	E	OC	0	1	0-3 ft		SWAM AWAY FROM RIG
12/9/2013	CON	X-6	15:06:11	15:06:29	HSEA	80	80	70	1	0	Toward	SW-W	SI		NONE	E	PC	0	1	0-3 ft		
12/9/2013	CON	X-6	15:09:06	15:09:07	HSEA	100	180	140	1	0	None	RE	SI		NONE	E	PC	0	1	0-3 ft		
12/9/2013	CON	V-6	15:12:00	15:12:28	HSEA	10	270	80	1	0	None	MI			NONE	E	PC	0	1	0-3 ft		
12/10/2013	CON	VX-44	9:00:29	9:00:34	HSEA	45	60	150	1	0	Parallel	SW-S	DI		V	E	S	5	2	0-3 ft		
12/10/2013	CON	VX-44	9:14:15	9:14:22	HSEA	100	10	80	1	0	Toward	SW-W	DI		V	E	S	5	2	0-3 ft		
12/10/2013	CON	NA	9:25:33	9:25:47	HSEA	15	0	40	1	1	Toward	SW-NW	DI		NONE	E	S	5	2	0-3 ft		
12/10/2013	CON	NA	9:28:39	9:28:45	HSEA	10	90	75	1	1	Away	SW-W	DI		NONE	E	S	5	2	0-3 ft		
12/10/2013	CON	V-6	9:45:57	9:46:01	HSEA	50	270	50	1	1	None	RE			NONE	E	S	5	2	0-3 ft		
12/10/2013	CON	X-5	10:12:42	10:13:00	HSEA	50	90	150	1	0	None	RE			NONE	E	S	5	2	0-3 ft		
12/10/2013	CON	X-5	10:18:01	10:18:03	HSEA	75	90	175	1	0	None	RE	DI		I	E	S	5	2	0-3 ft		
12/10/2013	CON	NA	12:37:35	12:37:43	HSEA	130	90	100	1	0	Parallel	SW-N	DI		NONE	E	PC	0	1	0-3 ft		
12/10/2013	CON	N-10	13:41:57	13:42:03	HSEA	35	90	35	1	0	None	RE	SI		NONE	E	OC	0	1	0-3 ft		
12/10/2013	CON	N-10	14:33:08	14:33:12	HSEA	45	90	35	1	0	Away	SW-S	DI		V	E	OC	0	1	0-3 ft		
12/10/2013	POST	X-5	15:13:10	15:13:17	HSEA	5	0		1	0	Parallel	SW-W	DI		NONE	E	S	5	2	0-3 ft		
12/11/2013	CON	NA	9:18:07	9:18:29	HSEA	20	10	100	2	2	Toward	SW-W	DI		NONE	E	S	10	1	0-3 ft		
12/10/2013	CON	V-04	11:30:20	11:30:47	HSEA	45	260	45	1	1	None	DI			NONE	E	PC	0	1	0-3 ft		
12/11/2013	CON	TT-02	11:31:27	11:31:33	HSEA	10	250	25	1	1	Parallel	RE	SW-E		NONE	E	OC	0	1	0-3 ft		
12/11/2013	CON	TT-2	11:33:19	11:33:33	HSEA	45	330	20	1	1	Away	SW-NW	SI		NONE	E	OC	0	1	0-3 ft		
12/11/2013	CON	TT-2	11:46:02	11:46:30	HSEA	100	45	175	1	0	Parallel	SW-S			V	E	S	10	1	0-3 ft		
12/12/2013	CON	NA	9:21:58	9:22:08	HSEA	60	275	65	1	0	Parallel	SW-S			NONE	E	S	0	1	0-3 ft		
12/12/2013	CON	NA	9:28:02	9:28:04	HSEA	15	290	100	1	1	None	LO	SI		NONE	E	OC	0	2	0-3 ft		
12/12/2013	CON	NA	10:19:00	10:26:54	HSEA	90	110		1	1	None	MI	DI		NONE	E	OC	0	1	0-3 ft		
12/12/2013	CON	N-11	11:47:08	11:47:25	HSEA	42	210	30	1	1	Away	FL	DI		NONE	E	OC	0	1	0-3 ft		
12/12/2013	CON	NA	11:47:08	11:47:19	HSEA	60	140	15	1	1	Away	SW-N	DI		NONE	G	OC	0	2	0-3 ft		
12/12/2013	CON	N-11	11:50:37	11:50:38	HSEA	70	30	60	1	1	None	LO	DI		NONE	G	OC	0	2	0-3 ft		
12/12/2013	CON	N-11	11:57:07	23:57:43	HSEA	30	200	29	1	1	Parallel	SW-W	DI		I	E	OC	0	1	0-3 ft		
12/12/2013	CON	NA	12:15:37	12:15:52	HSEA	40	250	30	1	0	Away	SW-NE	DI		NONE	G	L	0	1	0-3 ft		

Date	Event Code	Pile	Start Time	End Time	Species	Dist. To animal (m)	Dir. To animal (deg)	Dist to pile (m)	Best num of animals	Num of juv	Relative motion	Behavior 1	Behavior 2	Behavior 3	Const Type	Visi-bility	Weather	Glare (%)	BSS	Wave ht	Swell Dir	Comments
12/12/2013	CON	NA	12:51:40	12:52:01	HSEA	40	280		1	1	None	LO	SI		NONE	G	R	0	1	0-3 ft		
12/12/2013	OTHR	NA	13:58:52	13:58:56	CASL				35						OTHER	G	R	0	1	0-3 ft		Marine mammal survey - 22 on fence. No Stellar Sea lions.
12/13/2013	CON	VX-42	8:42:48	8:42:55	HSEA	75	195	65	1	0	Toward	SW-N	DI		I	E	OC	0	1	0-3 ft		
12/13/2013	CON	VX-42	8:59:33	8:59:47	HSEA	300	180	290	1	0	Away	SW-S	DI		NONE	E	OC	0	1	0-3 ft		
12/13/2013	CON	NA	9:03:00	9:03:17	HSEA	70	120	180	1	1	Away	SW-SW	DI		NONE	G	OC	80	1	0-3 ft		
12/13/2013	CON	VX-42	9:08:47	9:09:00	HSEA	65	210	55	1	0	Parallel	SW-E	FL	SI	NONE	E	OC	0	1	0-3 ft		
12/13/2013	CON	NA	9:11:06	9:11:57	HSEA	140	270	60	1	0	Toward	SW-N	DS		NONE	G	OC	80	1	0-3 ft		
12/13/2013	CON	NA	9:21:16	9:21:27	HSEA	80	120	200	1	1	Away	SW-S	DI		NONE	G	OC	80	1	0-3 ft		
12/13/2013	CON	NA	10:34:08	10:34:18	HSEA	80	120	200	1	1	Away	SW-S	DI		NONE	G	PC	80	1	0-3 ft		
12/13/2013	CON	NA	10:41:52	10:42:11	HSEA	90	290	30	1	1	Away	SW-S	DI		NONE	G	OC	80	1	0-3 ft		
12/13/2013	OTHR	NA	13:02:36	13:02:37	CASL				47						OTHER	G	OC	5	1	0-3 ft		Marine Mammal Survey-8 on east end of package, 10 on west end of package, 29 on fence.
12/13/2013	OTHR	NA	13:03:52	13:03:53	STSL				4						OTHER	G	OC	5	1	0-3 ft		Marine mammal survey 3 on east end of package, 1 on west end of package
12/14/2013	CON	VX-41	10:00:25	10:00:33	HSEA	25	240	17	1	0	Parallel	SW-E	LO	DI	NONE	E	OC	10	1	0-3 ft		
12/14/2013	MS	VX-41	10:12:22	10:12:40	HSEA	15	265	13	1	0	Parallel	SW-N	FL	DI	NONE	E	OC	10	1	0-3 ft		Shutdown vibratory pile driving to confirmed distance of seal to pile. Once confirmed, resumed vibe.
12/14/2013	CON	VX-41	10:18:23	10:18:30	HSEA	70	240	60	1	0	None	FL	DI		NONE	E	OC	10	1	0-3 ft		confirmed out of shutdown zone to W. Resume vibe.
12/14/2013	CON	VX-41	10:26:38	10:26:45	HSEA	130	110	140	1	0	Away	SW-S	DI		V	E	OC	10	1	0-3 ft		
12/14/2013	CON	VX-41	10:30:02	10:30:08	HSEA	250	175	255	1	0	Away	SW-SW	DI		V	E	OC	10	1	0-3 ft		
12/14/2013	CON	NA	11:40:42	11:41:17	HSEA	30	95	160	1	1	Parallel	SW-N	LO	DI	NONE	E	OC	0	1	0-3 ft		
12/14/2013	CON	NA	11:44:15	11:44:38	HSEA	25	90	150	1	1	Toward	SW-NW	LO	SI	NONE	E	S	5	1	0-3 ft		different individual than #1, very pale face
12/14/2013	OTHR	NA	12:52:15	12:53:36	STSL				4	1		RE			OTHER	E	S	5	1	0-3 ft		North Delta
12/14/2013	OTHR	NA	12:58:30	12:58:38	CASL				67	60		RE	PL		OTHER	E	S	5	1	0-3 ft		North Delta: 22, WRA fence: 45
12/14/2013	CON	NA	13:51:27	13:51:41	HSEA	60	0	25	1	1	Toward	SW-NW	LO		NONE	E	S	5	1	0-3 ft		
12/14/2013	CON	NA	13:58:59	13:59:05	HSEA	7	345	21	1	1	Away	SW-N	DI		NONE	G	OC	0	1	0-3 ft		
12/16/2013	CON	N-12	15:29:33	15:29:51	HSEA	65	150	100	1	1	Parallel	MI	LO	DI	V	E	S	5	1	0-3 ft		
12/17/2013	CON	NA	11:13:17	11:13:46	HSEA	200	180	150	1	1	Away	SW-W	DI		NONE	G	OC	0	2	0-3 ft		
12/17/2013	CON	NA	12:57:46	12:58:12	HSEA	75	45	100	1	0	None	RE	DI		NONE	E	OC	0	1	0-3 ft		recorded by JRS
12/17/2013	CON	VX-37	14:50:00	14:50:06	HSEA	20	250	30	1	0	None	LO	DI		I	M	OC	0	1	0-3 ft		

Date	Event Code	Pile	Start Time	End Time	Species	Dist. To animal (m)	Dir. To animal (deg)	Dist to pile (m)	Best num of animals	Num of juv	Relative motion	Behavior 1	Behavior 2	Behavior 3	Const Type	Visi-bility	Weather	Glare (%)	BSS	Wave ht	Swell Dir	Comments
12/17/2013	CON	VX-37	14:56:04	14:56:55	HSEA	100	280	25	1	1	None	LO			I	E	OC	0	1	0-3 ft		seal looking, appeared to be near shut down zone at south end of barge, difficult to determine from our position, lost sight as we rounded SE corner of transect
12/17/2013	CON	NA	15:15:11	15:15:17	HSEA	50	0	200	1	0	None	RE	DI		NONE	E	OC	0	1	0-3 ft		recorded by JRS
12/18/2013	PRE	NA	9:16:01	9:16:43	HSEA	180	170	150	1	1	Parallel	SW-E	LO		NONE	E	OC	0	1	0-3 ft		
12/18/2013	PRE	NA	9:19:03	9:19:26	HSEA	95	100	80	1	1	None	LO	DI		NONE	E	OC	0	1	0-3 ft		pale individual
12/18/2013	PRE	NA	9:38:09	9:38:55	HSEA	40	180	150	1	1	None	RE	DI		NONE	E	OC	0	1	0-3 ft		
12/18/2013	CON	NA	10:06:32	10:06:47	HSEA	80	90	75	1	1	Toward	SW-E	LO		NONE	E	OC	0	1	0-3 ft		
12/18/2013	CON	NA	10:56:51	11:07:06	HSEA	80	80	160	1	1	None	MI	SI		NONE	E	PC	10	1	0-3 ft		
12/18/2013	CON	NA	11:09:46	11:09:57	HSEA	150	180	300	1	0	None	RE	DI		NONE	E	PC	0	1	0-3 ft		
12/18/2013	CON	NA	11:13:13	11:13:17	HSEA	100	30	140	1	0	None	LO	DI		NONE	E	PC	5	1	0-3 ft		
12/18/2013	CON	NA	11:20:21	11:27:16	HSEA	110	90	260	1	1	Parallel	MI	DI	SW-N	NONE	E	PC	10	1	0-3 ft		
12/18/2013	CON	NA	11:28:20	11:28:21	HSEA	120	160	250	1	0	None	RE	DI		NONE	E	PC	10	1	0-3 ft		
12/18/2013	CON	NA	11:38:37	11:43:05	HSEA	70	110	200	1	1	Parallel	MI	DI		NONE	E	PC	10	1	0-3 ft		
12/18/2013	CON	NA	11:50:28	11:50:49	HSEA	80	70	200	1	1	None	RE	DI		NONE	E	PC	10	1	0-3 ft		
12/18/2013	CON	NA	12:40:15	12:40:21	HSEA	90	345	160	1	0	Toward	MI	SI		NONE	E	OC	0	1	0-3 ft		
12/18/2013	CON	NA	12:54:51	12:54:56	CASL	2	280	100	1	0	Away	CD	DI		NONE	E	OC	0	1	0-3 ft		
12/18/2013	CON	NA	14:12:30	14:12:41	HSEA	100	130	220	1	0	None	RE	DI		NONE	E	OC	10	1	0-3 ft		
12/18/2013	CON	VX-39	14:22:18	14:22:26	HSEA	45	275	65	1	0	Toward	LO	DI		V	E	OC	0	1	0-3 ft		
12/19/2013	CON	VX-39	8:55:41	8:56:12	HSEA	10	90	40	1	0	Toward	TR-NW	DI		I	G	OC	0	1	0-3 ft		
12/21/2013	CON	NA	8:46:11	8:46:40	HSEA	30	190	160	1	1	Away	SW-S	LO	DI	NONE	G	OC	0	1	0-3 ft		
12/21/2013	CON	NA	9:48:46	9:48:54	HSEA	230	10	150	1	0	Parallel	SW-N	LO	DI	NONE	G	L	0	1	0-3 ft		
12/21/2013	CON	NA	10:18:06	10:18:21	HSEA	40	90	80	1	1	None	LO	DI		NONE	G	L	0	1	0-3 ft		
12/21/2013	CON	NA	10:35:18	10:35:26	HSEA	60	90	120	1	1	Parallel	SW-W	DI		NONE	G	L	0	1	0-3 ft		
12/21/2013	CON	NA	10:38:08	10:38:57	HSEA	30	90	115	1	1	Parallel	MI			NONE	G	L	0	1	0-3 ft		saw foraging around pile
12/21/2013	CON	NA	10:42:43	10:43:09	HSEA	45	270	135	1	1	None	MI			NONE	G	L	0	1	0-3 ft		
12/21/2013	CON	VX-38	10:46:29	10:46:33	HSEA	30	270	40	1	0	Away	SW-S			I	E	S	0	1	0-3 ft		
12/21/2013	CON	VX-38	10:55:04	10:55:14	HSEA	3	270	25	1	1	Away	MI	DI		I	E	S	0	1	0-3 ft		
12/21/2013	CON	VX-41	11:11:16	11:11:43	HSEA	12	270	50	1	1	Toward	MI	SI		NONE	E	OC	10	1	0-3 ft		
12/23/2013	CON	VX-40	9:05:40	9:05:43	HSEA	15	270	60	1	0	Parallel	SW-S			I	E	OC	10	1	0-3 ft		
12/23/2013	CON	VX-40	9:07:50	9:08:09	HSEA	8	295	80	1	0	None	MI	SW-E		I	E	OC	10	1	0-3 ft		

Date	Event Code	Pile	Start Time	End Time	Species	Dist. To animal (m)	Dir. To animal (deg)	Dist to pile (m)	Best num of animals	Num of juv	Relative motion	Behavior 1	Behavior 2	Behavior 3	Const Type	Visi-bility	Weather	Glare (%)	BSS	Wave ht	Swell Dir	Comments
12/23/2013	CON	VX-40	9:09:41	9:10:03	HSEA	20	320	100	1	0	None	MI	SW-E		I	E	OC	10	1	0-3 ft		
12/23/2013	CON	VX-40	9:20:45	9:25:03	HSEA	140	90	240	1	0	Away	SW-E			NONE	G	OC	0	1	0-3 ft		
12/23/2013	CON	VX-40	10:17:12	10:19:26	HSEA	100	90	240	1	0	Away	SW-N			NONE	G	OC	0	1	0-3 ft		
12/23/2013	CON	NA	10:32:40	10:32:52	HSEA	60	170	120	1	0	None	RE	SI		NONE	G	OC	0	1	0-3 ft		
12/23/2013	CON	NA	11:20:25	11:20:33	HSEA	72	80		1	1	Parallel	SW-S	DI		NONE	G	OC	0	1	0-3 ft		
12/23/2013	CON	NA	11:24:29	11:24:45	HSEA	150	200	80	1	0	Away	SW-S	SI		NONE	G	OC	0	1	0-3 ft		
12/23/2013	CON	NA	11:35:11	11:36:19	HSEA	50	90	240	1	0	Parallel	DI			NONE	G	S	30	1	0-3 ft		
12/23/2013	CON	J3	14:19:33	14:22:35	HSEA	120	80	140	1	0	Away	SW-S			NONE	G	S	30	1	0-3 ft		
12/23/2013	CON	J3	14:38:05	14:39:09	HSEA	100	90	200	1	0	Parallel	DI			NONE	G	S	40	1	0-3 ft		
12/23/2013	CON	J3	14:43:40	14:45:43	HSEA	110	90	200	1	0	Parallel	DI			NONE	G	OC	0	1	0-3 ft		
12/23/2013	CON	J3	15:20:32	15:21:53	HSEA	110	90	200	1	0	Parallel	DI			NONE	G	S	30	1	0-3 ft		
12/23/2013	CON	J2	15:44:23	15:47:39	HSEA	100	90	170	2	2	Parallel	SW-N			NONE	G	S	30	1	0-3 ft		
12/23/2013	CON	J-2	15:49:37	15:52:39	HSEA	110	90	210	1	1	None	DI			I	G	S	30	1	0-3 ft		
12/23/2013	CON	J-2	15:56:23	15:59:21	HSEA	120	100	230	1	0	Parallel	SW-N			NONE	G	S	30	1	0-3 ft		
12/23/2013	POST	J2	15:58:21	16:02:42	HSEA	120	90	210	1	0	Parallel	SW-N			NONE	G	S	30	1	0-3 ft		
12/24/2013	PRE	J-1	8:21:32	8:21:58	HSEA	45	90	56	1	0	None	RE	SI		NONE	G	S	30	1	0-3 ft		
12/24/2013	PRE	J-1	8:23:50	8:24:17	HSEA	110	87	165	1	0	None	SW-N	DI		NONE	G	S	30	1	0-3 ft		
12/24/2013	CON	J-1	8:28:32	8:28:46	HSEA	170	35	220	1	0	None	SW-N			NONE	G	S	30	1	0-3 ft		
12/24/2013	CON	J-1	8:28:40	8:30:33	HSEA	80	30	90	1	0	Toward	DI			SSI	G	OC	0	1	0-3 ft		
12/24/2013	CON	M-3	8:41:38	8:42:00	HSEA	20	230	70	1	1	Toward	SW-NE			NONE	G	OC	10	1	0-3 ft		
12/24/2013	CON	J-3	8:42:00	8:43:16	HSEA	40	100	65	1	0	Toward	DI			NONE	E	OC	10	1	0-3 ft		
12/24/2013	CON	J-1	8:43:13	8:44:25	HSEA	20	90	15	1	0	Toward	SW-E			NONE	E	OC	10	1	0-3 ft		
12/24/2013	CON	NA	8:48:29	8:49:22	HSEA	55	355	18	1	0	None	RE			NONE	G	S	30	1	0-3 ft		Diane's observation #3
12/24/2013	CON	NA	8:50:47	8:51:03	HSEA	55	365	40	1	0	None	MI			NONE	G	S	30	1	0-3 ft		
12/24/2013	CON	M-3	8:59:36	9:00:33	HSEA	60	90	240	1	1	Parallel	SW-N			I	E	OC	10	1	0-3 ft		
12/24/2013	CON	M-3	9:07:56	9:08:09	HSEA	45	10	40	1	0	Away	SW-NE	DI		I	G	S	30	1	0-3 ft		
12/24/2013	CON	M-3	9:18:25	9:18:36	HSEA	40	5	45	1	0	Toward	SW-SW	DS		NONE	G	S	30	1	0-3 ft		
12/24/2013	CON	M-2	9:26:13	9:28:26	HSEA	70	0	280	1	0	Away	DI			NONE	G	S	10	1	0-3 ft		
12/24/2013	CON	M-2	9:27:20	9:27:25	HSEA	40	0	40	1	0	None	LO	SI		NONE	G	S	30	1	0-3 ft		
12/24/2013	CON	NA	10:14:17	10:14:35	HSEA	60	0	70	1	0	None	MI	DI		NONE	G	S	30	1	0-3 ft		
12/24/2013	CON	R-3	10:59:05	10:59:11	HSEA	200	0	190	1	0	Away	SW-N	DI		I	G	S	30	1	0-3 ft		

Date	Event Code	Pile	Start Time	End Time	Species	Dist. To animal (m)	Dir. To animal (deg)	Dist to pile (m)	Best num of animals	Num of juv	Relative motion	Behavior 1	Behavior 2	Behavior 3	Const Type	Visi-bility	Weather	Glare (%)	BSS	Wave ht	Swell Dir	Comments
12/24/2013	POST	R-3	11:33:45	11:33:47	HSEA	40	90	60	1	0	Toward	MI	DI		NONE	G	S	30	0	0-3 ft		
12/27/2013	PRE	NA	8:41:07	8:41:12	HSEA	125	175	50	1	1	None	RE	SI		NONE	G	OC	30	1	0-3 ft		
12/27/2013	CON	NA	10:02:55	10:03:02	HSEA	100	180	130	1	0	Parallel	SW-E	DI		NONE	G	OC	0	1	0-3 ft		
12/27/2013	CON	NA	10:07:53	10:08:21	HSEA	110	190	135	1	0	None	RE	LO	SI	NONE	G	OC	30	1	0-3 ft		
12/27/2013	CON	NA	10:13:36	10:13:44	HSEA	150	20	135	1	0	None	RE	DI		NONE	G	OC	30	1	0-3 ft		
12/27/2013	OTHR	NA	10:42:35	10:42:46	CASL	35	180	600	7	0	None	RE	VO	PL	OTHER	G	OC	30	1	0-3 ft		east end of package located at north Delta. SHJ and SMH noted a blue coloring on seals.
12/27/2013	OTHR	NA	10:51:10	10:51:11	CASL	30	200	1600	28	0	None	RE			OTHER	G	OC	30	1	0-3 ft		along fence
12/27/2013	CON	N-6	11:17:44	11:22:42	HSEA	10	90	40	1	1	None	FO	LO	DI	NONE	G	OC	0	1	0-3 ft		
12/27/2013	CON	NA	12:25:50	12:26:02	HSEA	60	10	130	2	0	Away	SW-W	SI		NONE	G	OC	30	1	0-3 ft		
12/27/2013	CON	NA	12:48:03	12:48:09	HSEA	100	130	270	1	1	Parallel	SW-N	DI		NONE	G	OC	10	1	0-3 ft		
12/27/2013	CON	R-2	13:20:22	13:21:02	HSEA	175	100	160	1	1	Parallel	SW-E	SI		NONE	G	OC	10	1	0-3 ft		
12/27/2013	CON	R-2	13:27:04	13:27:06	HSEA	25	90	55	1	1	Toward	SW-N			NONE	G	OC	10	1	0-3 ft		
12/27/2013	CON	R-2	13:35:40	13:35:44	HSEA	20	90	55	1	1	None	SI			NONE	G	OC	10	1	0-3 ft		
12/27/2013	CON	R-2	13:43:45	13:43:52	HSEA	90	190	35	1		Away				NONE	G	OC	10	1	0-3 ft		
12/27/2013	CON	R-2	13:52:22	13:53:06	HSEA	40	210	75	1	1	Toward	SW-N			NONE	G	OC	10	1	0-3 ft		
12/27/2013	CON	R-2	13:56:57	13:56:58	HSEA	20	220	80	1	1	Away	SW-E			NONE	G	OC	10	1	0-3 ft		
12/27/2013	CON	R-1	14:18:42	14:18:46	HSEA	120	180	55	1	1	Toward	LO			NONE	G	OC	10	1	0-3 ft		
12/27/2013	CON	R-1	14:25:59	14:26:28	HSEA	10	180	45	1	1	Toward	LO	SI		NONE	G	OC	10	1	0-3 ft		
12/27/2013	CON	R-1	14:30:14	14:31:34	HSEA	70	150	40	1	1	Toward	SW-N	LO		NONE	G	OC	10	1	0-3 ft		
12/28/2013	CON	NA	8:37:02	8:37:23	HSEA	160	90	160	1	1	Parallel	SW-N	DI		NONE	G	OC	10	1	0-3 ft		
12/28/2013	CON	NA	9:07:19	9:08:07	HSEA	20	180	75	1	1	None	LO	DI		NONE	G	OC	10	1	0-3 ft		Same animal
12/28/2013	CON	NA	9:14:05	9:14:14	HSEA	30	345	175	3	0	None	DI	LO	SP	NONE	G	OC	10	1	0-3 ft		Looked liked foraging behaviour
12/28/2013	CON	NA	9:18:30	9:44:29	HSEA	150	90	160	1	1	None	LO	SI	RE	NONE	G	OC	10	1	0-3 ft		Same animal from sighting 1 and 2, sank and resurfaced 6 times
12/28/2013	CON	NA	9:28:53	9:28:58	HSEA	150	300	150	1	0	Parallel	SW-S			NONE	G	OC	10	1	0-3 ft		likely one of the animals in sighting 3
12/28/2013	CON	NA	9:33:50	9:33:55	HSEA	89	5	75	1	1	None	SW-S			NONE	E	S	0	1	0-3 ft		
12/28/2013	CON	NA	9:34:53	9:35:28	HSEA	30	0	200	2	0	Parallel	LO	SW-E		NONE	G	OC	10	1	0-3 ft		likely two of the same animals in sighting 3
12/28/2013	CON	NA	9:37:17	9:37:21	HSEA	45	267	22	1	1	None	RE	SI		NONE	E	S	0	1	0-3 ft		

Date	Event Code	Pile	Start Time	End Time	Species	Dist. To animal (m)	Dir. To animal (deg)	Dist to pile (m)	Best num of animals	Num of juv	Relative motion	Behavior 1	Behavior 2	Behavior 3	Const Type	Visi-bility	Weather	Glare (%)	BSS	Wave ht	Swell Dir	Comments
12/28/2013	CON	NA	9:44:51	9:44:55	HSEA	45	0	35	1	1	None	RE	SI		NONE	E	S	0	1	0-3 ft		
12/28/2013	CON	T-3	9:45:14	9:45:19	HSEA	10	270	75	1	1	Away	SW-W			NONE	G	OC	10	1	0-3 ft		
12/28/2013	CON	T-3	9:47:46	9:47:57	HSEA	20	270	55	3	0	None	SW-S	LO	SI	NONE	G	OC	10	1	0-3 ft		First animal 300m away swimming south, other two animalsclose together and surfaced 30 meters west of rig
12/28/2013	CON	NA	10:02:09	10:02:17	HSEA	110	0	95	1	1	Parallel	SW-W	DI		NONE	E	S	0	1	0-3 ft		
12/28/2013	CON	T-3	10:18:08	10:18:13	HSEA	50	0	45	1	1	Toward	SW-S	DI		I	E	S	0	1	0-3 ft		
12/28/2013	CON	T-3	10:20:03	10:20:26	HSEA	18	345	40	1	1	Toward	MI	DI		I	E	S	0	1	0-3 ft		
12/28/2013	CON	T-3	10:22:24	10:22:29	HSEA	24	345	23	2	2	None	MI	DI		I	E	S	0	1	0-3 ft		
12/28/2013	CON	V-1	10:52:37	10:52:40	HSEA	100	90	75	1	1	Toward	SW-N			I	G	OC	10	1	0-3 ft		
12/28/2013	CON	V-1	11:01:50	11:02:02	HSEA	42	345	45	1	0	None	MI	DI		I	E	S	0	1	0-3 ft		
12/28/2013	CON	T-2	11:15:51	11:16:25	HSEA	40	10	20	1	1	Away	SW-E	LO		NONE	E	PC	0	1	0-3 ft		
12/28/2013	CON	T-2	11:22:50	11:23:08	HSEA	60	50	56	1	1	Toward	SW-W	DI		I	E	S	0	1	0-3 ft		
12/28/2013	CON	T-2	11:28:06	11:28:33	HSEA	120	0	110	1	1	None	MI	DI		I	E	S	0	1	0-3 ft		
12/28/2013	CON	T-2	11:33:35	11:34:14	HSEA	35	289	29	1	0	Toward	SW-SW	DI		I	E	S	0	1	0-3 ft		
12/28/2013	CON	T-1	12:40:02	12:40:24	HSEA	26	345	35	1	1	None	MI	DI		SSI	E	OC	0	1	0-3 ft		
12/28/2013	CON	T-1	12:42:28	12:42:47	HSEA	15	0	36	1	1	None	LO	SI		I	E	OC	0	1	0-3 ft		
12/28/2013	CON	T-1	12:46:06	12:46:11	HSEA	40	270	100	1	1	Toward	SW-N			I	G	OC	10	1	0-3 ft		
12/28/2013	CON	T-1	12:46:37	12:46:40	HSEA	15	48	38	1	1	Toward	SW-W	DI		I	E	OC	0	1	0-3 ft		
12/28/2013	CON	T-1	12:48:31	12:48:35	HSEA	42	345	27	1	1	Parallel	SW-NW	DI		I	E	OC	0	1	0-3 ft		
12/28/2013	CON	T-1	12:59:41	12:59:55	HSEA	190	90	70	1	1	Toward	LO	SI		NONE	G	OC	10	1	0-3 ft		Same animal as sighting 10 during impact
12/28/2013	CON	V-2	13:10:30	13:10:44	HSEA	15	357	33	1	1	None	LO	DI		I	E	OC	0	1	0-3 ft		
12/28/2013	CON	V-2	13:13:03	13:13:26	HSEA	45	46	68	1	1	Away	SW-NW			I	E	OC	0	1	0-3 ft		
12/28/2013	CON	V-2	13:14:35	13:14:48	HSEA	110	5	105	1	1	Parallel	MI	DI		I	E	OC	0	1	0-3 ft		
12/28/2013	CON	V-2	13:15:59	13:16:06	HSEA	44	345	38	1	1	None	MI			I	E	OC	0	1	0-3 ft		
12/28/2013	CON	V-2	13:19:13	13:19:51	HSEA	175	150	320	1	1	Toward	SW-N	DI		I	G	OC	10	1	0-3 ft		
12/28/2013	CON	V-2	13:20:36	13:21:54	HSEA	300	110	275	1	0	Away	SW-S			I	G	OC	10	1	0-3 ft		this may have been the same seal as sighting 11
12/28/2013	CON	V-3	13:35:09	13:35:51	HSEA	25	180	125	1	1	None	LO	SI		NONE	G	OC	10	1	0-3 ft		
12/28/2013	CON	V-3	13:48:19	13:48:32	HSEA	45	345	33	1	0	None	LO	DI		I	E	OC	0	1	0-3 ft		
12/28/2013	CON	V-3	13:55:45	13:55:55	HSEA	77	343	87	1	0	None	MI	DI		I	E	OC	0	1	0-3 ft		
12/28/2013	CON	V-3	13:58:44	13:58:57	HSEA	65	345	56	1		Away	SW-N			I	E	OC	0	1	0-3 ft		
12/28/2013	CON	X-3	14:19:35	14:19:59	HSEA	200	0	270	1	0	None	RE	SI		NONE	G	OC	10	1	0-3 ft		
12/28/2013	CON	X-3	14:34:09	14:35:22	HSEA	76	90	110	1	1	Away	MI	SW-E		I	E	S	0	1	0-3 ft		
12/28/2013	CON	X-3	14:36:11	14:36:57	HSEA	60	170	75	1	0	Away	LO	SW-NE	SI	I	G	OC	10	1	0-3 ft		
12/28/2013	CON	X-2	15:02:58	15:03:04	HSEA	55	345	45	1	0	Away	SW-N			I	E	S	0	1	0-3 ft		
12/28/2013	CON	X-2	15:07:43	15:07:49	HSEA	70	90	130	1	1	Away	SW-E			I	E	S	0	1	0-3 ft		
12/28/2013	CON	X-2	15:17:42	15:17:46	HSEA	350	5	340	1	0	None	SW-E	DI		I	E	S	0	1	0-3 ft		
12/28/2013	CON	X-1	15:49:39	15:49:59	HSEA	160	190	60	1	1	Toward	SW-N	LO	SI	I	G	OC	10	1	0-3 ft		
12/28/2013	POST	NA	16:02:09	16:02:56	HSEA	30	90	120	1	1	Toward	SW-N	DI		NONE	G	OC	10	1	0-3 ft		
12/28/2013	POST	NA	16:08:19	16:08:59	HSEA	210	50	210	1	0	Away	SW-N			NONE	G	OC	10	1	0-3 ft		
12/30/2013	CON	NA	10:26:58	10:27:41	HSEA	90	90	75	1	0	Parallel	SW-N	RE		NONE	E	OC	0	1	0-3 ft		
12/30/2013	CON	NA	10:30:33	10:30:58	HSEA	120	80	150	1	0	Parallel	RE			NONE	E	OC	0	1	0-3 ft		

Date	Event Code	Pile	Start Time	End Time	Species	Dist. To animal (m)	Dir. To animal (deg)	Dist to pile (m)	Best num of animals	Num of juv	Relative motion	Behavior 1	Behavior 2	Behavior 3	Const Type	Visi-bility	Weather	Glare (%)	BSS	Wave ht	Swell Dir	Comments
12/30/2013	CON	NA	11:32:25	11:32:34	HSEA	10	26	12	1	0	Toward	SW-S	DI		NONE	E	OC	0	1	0-3 ft		
12/30/2013	CON	NA	11:39:39	11:39:15	HSEA	70	68	70	1	0	Away	SW-NE	RE	DI	NONE	E	OC	10	1	0-3 ft		
12/30/2013	CON	NA	11:52:38	11:52:45	HSEA	40	85	40	1	0	Parallel	SW-SE	SI		NONE	E	OC	10	1	0-3 ft		
12/30/2013	CON	NA	13:17:24	13:17:37	HSEA	70	300	70	1	0	None	RE	DI		NONE	E	OC	10	1	0-3 ft		
12/31/2013	PRE	NA	8:14:00	8:14:12	HSEA	75	280	70	1	0	None	RE			NONE	E	OC	10	1	0-3 ft		
12/31/2013	CON	NA	8:31:51	8:31:52	HSEA	100	0	50	1	0	None	RE	DI		NONE	E	OC	10	1	0-3 ft		
12/31/2013	CON	NA	8:42:04	8:42:09	HSEA	75	270	200	1	0	None	RE			NONE	E	OC	10	1	0-3 ft		
12/31/2013	CON	NA	9:05:00	9:05:02	CASL	5	0	100	1	0	None	DI			NONE	E	OC	10	1	0-3 ft		It was avoiding boat, looked at us.
12/31/2013	CON	NA	9:05:45	9:06:00	CASL	30	170	75	1	0	Away	SW-S			NONE	E	OC	10	1	0-3 ft		
12/31/2013	CON	A-3	9:18:17	9:18:28	HSEA	100	175		1	0	Toward	SW-NE			NONE	E	OC	10	1	0-3 ft		
12/31/2013	CON	NA	9:18:57	9:19:05	HSEA	120	190	140	1	0	Toward	SW-N	DI		NONE	E	OC	0	1	0-3 ft		
12/31/2013	CON	A-3	9:21:01	9:21:24	HSEA	150	90	100	1	0	Toward	SW-SW			NONE	E	OC	10	1	0-3 ft		
12/31/2013	CON	A-3	9:24:43	9:24:47	HSEA	150	45	100	1	0	Away	SW-N			NONE	E	OC	10	1	0-3 ft		
12/31/2013	CON	A-3	9:35:13	9:35:22	HSEA	150	160		1	0	Away	SW-S	DI		NONE	E	OC	10	1	0-3 ft		
12/31/2013	CON	A-3	10:02:03	10:02:04	HSEA	75	300	150	1	0	Toward	DI			NONE	E	OC	10	1	0-3 ft		
12/31/2013	CON	A-3	10:02:25	10:02:54	HSEA	75	330	150	1	0	Parallel	SW-E	DI		NONE	E	OC	10	1	0-3 ft		
12/31/2013	CON	A-3	10:08:51	10:08:55	HSEA	200	160	175	1	0	Away	SW-SW			NONE	E	OC	10	1	0-3 ft		
12/31/2013	CON	A-3	10:29:05	10:29:11	HSEA	150	200	90	1	0	Parallel	SW-S	DI		SSI	E	OC	10	1	0-3 ft		
12/31/2013	CON	A-3	10:34:08	10:34:30	HSEA	12	290	35	1	1	Parallel	SW-S	DI		I	E	OC	0	1	0-3 ft		
12/31/2013	CON	A-3	10:36:55	10:37:04	HSEA	75	100	50	1	0	Parallel	SW-S			I	E	OC	10	1	0-3 ft		
12/31/2013	CON	A-3	10:41:38	10:42:00	HSEA	75	80	50	1	0	Toward	SW-SW			NONE	E	OC	10	1	0-3 ft		
12/31/2013	CON	A-3	10:44:33	10:45:08	HSEA	50	90	100	1	0	Away	SW-N			NONE	E	OC	10	1	0-3 ft		
12/31/2013	CON	A-3	10:44:55	10:45:35	HSEA	78	5	108	1	1	Parallel	SW-E	HO		I	E	OC	0	1	0-3 ft		HAULED OUT ONTO TIRE HANGING FROM RIG 2
12/31/2013	CON	A-3	10:47:51	10:48:13	HSEA	50	270	30	1	1	Toward	SW-E	DI		I	E	OC	0	1	0-3 ft		
12/31/2013	CON	A-3	10:50:58	10:51:11	HSEA	100	290	80	1	1	None	RE	DI		NONE	E	OC	10	1	0-3 ft		
12/31/2013	CON	A-3	10:54:23	10:54:26	HSEA	100	270	150	1	1	None	RE			I	E	OC	10	1	0-3 ft		
12/31/2013	CON	A-3	11:00:21	11:00:25	HSEA	90	270	80	1	0	Toward	SW-E			NONE	E	OC	0	1	0-3 ft		
12/31/2013	CON	B-3	11:35:17	11:35:20	HSEA	200	0	200	1	0	Parallel	SW-E	DI		NONE	E	OC	10	1	0-3 ft		
12/31/2013	CON	B-3	11:45:24	11:45:51	HSEA	100	270	50	1	0	Parallel	SW-NW			I	E	OC	10	1	0-3 ft		
1/2/2014	CON	VX-35	9:17:30	9:17:38	HSEA	30	240	60	1		Toward	SW-NW	DI		I	G	OC	0	1	0-3 ft		
1/2/2014	CON	VX-35	9:17:30	9:17:38	HSEA	30	240	60	1		Toward	SW-NW	DI		I	G	OC	0	1	0-3 ft		
1/2/2014	CON	VX-35	9:18:23	9:18:28	HSEA	18	275	22	1	1	None	LO	SI		I	G	OC	10	1	0-3 ft		

Date	Event Code	Pile	Start Time	End Time	Species	Dist. To animal (m)	Dir. To animal (deg)	Dist to pile (m)	Best num of animals	Num of juv	Relative motion	Behavior 1	Behavior 2	Behavior 3	Const Type	Visi-bility	Weather	Glare (%)	BSS	Wave ht	Swell Dir	Comments
1/2/2014	CON	NA	9:21:01	9:21:02	HSEA	120	350	50	1	0	None	MI	SI		NONE	G	OC	0	1	0-3 ft		
1/2/2014	CON	NA	9:21:01	9:21:02	HSEA	120	350	50	1	0	None	MI	SI		NONE	G	OC	0	1	0-3 ft		
1/2/2014	CON	NA	9:23:52	9:24:17	HSEA	40	270	40	1	0	None	RE	SI		NONE	G	OC	0	1	0-3 ft		
1/2/2014	CON	NA	9:23:52	9:24:17	HSEA	40	270	40	1	0	None	RE	SI		NONE	G	OC	0	1	0-3 ft		
1/2/2014	CON	VX-35	9:28:57	9:29:12	HSEA	17	257	21	1	1	None	LO	SI		I	G	OC	10	1	0-3 ft		
1/2/2014	CON	NA	10:07:33	10:13:14	HSEA	100	15	200	1	0	Parallel	SW-S	DI		NONE	G	OC	0	1	0-3 ft		
1/2/2014	CON	NA	10:07:33	10:13:14	HSEA	100	15	200	1	0	Parallel	SW-S	DI		NONE	G	OC	0	1	0-3 ft		
1/2/2014	CON	NA	10:24:42	10:25:33	HSEA	75	90		1		Parallel	SW-SW			NONE	G	OC	0	1	0-3 ft		
1/2/2014	CON	NA	10:24:42	10:25:33	HSEA	75	90		1		Parallel	SW-SW			NONE	G	OC	0	1	0-3 ft		
1/2/2014	CON	NA	10:30:50	10:32:00	HSEA	10	0	20	1		Toward	MI			NONE	G	OC	0	1	0-3 ft		
1/2/2014	CON	NA	10:30:50	10:32:00	HSEA	10	0	20	1		Toward	MI			NONE	G	OC	0	1	0-3 ft		
1/2/2014	CON	NA	10:33:56	10:34:17	HSEA	150	120	250	2		Parallel	SW-N			NONE	G	OC	0	1	0-3 ft		
1/2/2014	CON	NA	10:33:56	10:34:17	HSEA	150	120	250	2		Parallel	SW-N			NONE	G	OC	0	1	0-3 ft		
1/2/2014	CON	C-3	11:09:06	11:09:08	HSEA	30	90	25	1	0	None	RE			I	G	OC	0	1	0-3 ft		
1/2/2014	CON	C-3	11:09:06	11:09:08	HSEA	30	90	25	1	0	None	RE			I	G	OC	0	1	0-3 ft		
1/2/2014	CON	C-2	13:18:08	13:18:16	HSEA	23	300	37	1	1	None	MI	SI		I	M	OC	10	1	0-3 ft		
1/2/2014	CON	C-2	13:18:51	13:19:40	HSEA	50	0	100	1		Toward	SW-W			I	G	OC	0	1	0-3 ft		
1/2/2014	CON	C-2	13:18:51	13:19:40	HSEA	50	0	100	1		Toward	SW-W			I	G	OC	0	1	0-3 ft		
1/2/2014	CON	NA	14:16:46	14:16:51	HSEA	24	200	24	1	1	None	LO	SI		NONE	M	OC	10	1	0-3 ft		Nose up
1/2/2014	CON	NA	14:19:03	14:19:14	HSEA	47	250	45	1	1	None	RE	LO	SI	NONE	M	OC	10	1	0-3 ft		
1/2/2014	CON	VX-33	14:22:32	14:22:35	HSEA	40	270	36	1	1	None	LO	SI		V	M	OC	10	1	0-3 ft		
1/2/2014	CON	N-8	15:58:22	15:58:42	HSEA	20	270	90	1	0	Away	SW-S	DI		V	M	OC	50	2	0-3 ft		
1/2/2014	CON	N-8	15:58:22	15:58:42	HSEA	20	270	90	1	0	Away	SW-S	DI		V	M	OC	50	2	0-3 ft		
1/3/2014	PRE	NA	8:57:37	8:59:10	HSEA	40	90		1		Parallel	SW-S			NONE	E	OC	10	1	0-3 ft		
1/3/2014	CON	NA	9:30:38	9:30:39	HSEA	30	270	50	1		None	MI	DI		NONE	E	OC	10	1	0-3 ft		
1/3/2014	CON	B-5	9:35:03	9:35:11	HSEA	36	200	38	1	1	None	MI	SI		I	M	OC	50	2	0-3 ft		
1/3/2014	CON	B-5	9:35:03	9:35:11	HSEA	36	200	38	1	1	None	MI	SI		I	M	OC	50	2	0-3 ft		
1/3/2014	CON	B-5	9:35:20	9:35:46	HSEA	60	290	120	1		None	MI			I	E	OC	10	1	0-3 ft		
1/3/2014	CON	B-5	9:40:03	9:41:01	HSEA	20	270	25	1	0	Toward	SW-E			I	G	OC	0	1	0-3 ft		
1/3/2014	CON	NA	9:46:40	9:46:43	HSEA	55	90	35	1		None	DI	MI		NONE	E	OC	10	1	0-3 ft		
1/3/2014	CON	NA	9:55:16	9:55:18	HSEA	15	310	60	1		None	MI	SI		NONE	E	OC	10	1	0-3 ft		
1/3/2014	CON	NA	9:59:31	9:59:33	HSEA	116	290	170	1		Parallel	SW-S			NONE	E	OC	10	1	0-3 ft		
1/3/2014	CON	NA	10:00:55	10:00:57	HSEA	95	110	100	1		Parallel	SW-NE			NONE	E	OC	10	1	0-3 ft		
1/3/2014	CON	A-5	10:04:19	10:04:31	HSEA	40	270	60	1		Toward	SW-W			I	E	OC	10	1	0-3 ft		
1/3/2014	CON	A-5	10:10:54	10:11:25	HSEA	32	265	46	1	1	None	LO	SI		I	M	OC	50	2	0-3 ft		
1/3/2014	CON	A-5	10:10:54	10:11:25	HSEA	32	265	46	1	1	None	LO	SI		I	M	OC	50	2	0-3 ft		

Date	Event Code	Pile	Start Time	End Time	Species	Dist. To animal (m)	Dir. To animal (deg)	Dist to pile (m)	Best num of animals	Num of juv	Relative motion	Behavior 1	Behavior 2	Behavior 3	Const Type	Visi-bility	Weather	Glare (%)	BSS	Wave ht	Swell Dir	Comments
1/3/2014	CON	NA	10:14:04	10:14:08	HSEA	70	90	15	1		None	RE			NONE	E	OC	10	1	0-3 ft		
1/3/2014	CON	NA	10:20:14	10:21:22	HSEA	14	200	43	1	1	None	RE	DI		NONE	G	S	50	2	0-3 ft		
1/3/2014	CON	NA	10:20:14	10:21:22	HSEA	14	200	43	1	1	None	RE	DI		NONE	G	S	50	2	0-3 ft		
1/3/2014	CON	A-5	10:24:31	10:25:01	HSEA	60	0	21	1		Toward	SW-N			I	E	OC	10	1	0-3 ft		
1/3/2014	CON	NA	10:25:58	10:26:30	HSEA	35	320	50	1	1	Away	SW-N			NONE	G	S	50	2	0-3 ft		
1/3/2014	CON	NA	10:25:58	10:26:30	HSEA	35	320	50	1	1	Away	SW-N			NONE	G	S	50	2	0-3 ft		
1/3/2014	CON	NA	10:27:25	10:27:51	HSEA	60	0	20	1		None	RE			NONE	E	OC	10	1	0-3 ft		
1/3/2014	CON	NA	10:29:37	10:29:59	HSEA	40	80	30	1		None	RE	SI		NONE	E	OC	10	1	0-3 ft		
1/3/2014	CON	NA	10:31:48	10:33:15	HSEA	50	90	10	1		None	RE	SI		NONE	E	OC	10	1	0-3 ft		
1/3/2014	CON	NA	10:35:19	10:35:23	HSEA	12	275	23	1	1	None	LO	SI		NONE	G	S	50	2	0-3 ft		
1/3/2014	CON	NA	10:35:19	10:35:23	HSEA	12	275	23	1	1	None	LO	SI		NONE	G	S	50	2	0-3 ft		
1/3/2014	CON	NA	10:42:33	10:42:47	HSEA	3	275	44	1	1	None	RE	DI		NONE	G	S	50	2	0-3 ft		
1/3/2014	CON	NA	10:42:33	10:42:47	HSEA	3	275	44	1	1	None	RE	DI		NONE	G	S	50	2	0-3 ft		
1/3/2014	CON	A-6	10:47:35	10:47:38	HSEA	30	90	40	1		Toward	SW-N			I	E	OC	10	1	0-3 ft		
1/3/2014	CON	A-6	10:49:47	10:50:10	HSEA	12	230	25	1	1	None	RE	LO	DI	I	G	S	50	2	0-3 ft		Nose up
1/3/2014	CON	A-6	10:49:47	10:50:10	HSEA	12	230	25	1	1	None	RE	LO	DI	I	G	S	50	2	0-3 ft		nose up
1/3/2014	CON	A-6	10:51:47	10:52:58	HSEA	10	275	25	1	1	Away	LO	MI		I	G	S	50	2	0-3 ft		nose up
1/3/2014	CON	A-6	10:51:47	10:52:58	HSEA	10	275	25	1	1	Away	LO	MI		I	G	S	50	2	0-3 ft		Nose up
1/3/2014	CON	A-6	10:54:25	10:54:28	HSEA	80	90	30	1		Away	SW-N			I	E	OC	10	1	0-3 ft		
1/3/2014	CON	A-6	10:54:42	10:55:32	HSEA	11	275	21	1	1	None	RE	DI		I	G	S	50	2	0-3 ft		
1/3/2014	CON	A-6	10:54:42	10:55:32	HSEA	11	275	21	1	1	None	RE	DI		I	G	S	50	2	0-3 ft		
1/3/2014	CON	A-6	10:56:21	10:56:49	HSEA	13	300	42	1	1	Away	MI	DI		I	G	S	50	2	0-3 ft		
1/3/2014	CON	A-6	10:56:21	10:56:49	HSEA	13	300	42	1	1	Away	MI	DI		I	G	S	50	2	0-3 ft		
1/3/2014	CON	A-6	10:58:47	10:59:06	HSEA	14	289	36	1	1	Away	SW-N			I	G	S	50	2	0-3 ft		
1/3/2014	CON	A-6	10:58:47	10:59:06	HSEA	14	289	36	1	1	Away	SW-N			I	G	S	50	2	0-3 ft		
1/3/2014	CON	NA	11:01:01	11:01:06	HSEA	11	290	35	1	1	None	LO	DI		NONE	G	S	50	2	0-3 ft		
1/3/2014	CON	NA	11:01:01	11:01:06	HSEA	11	290	35	1	1	None	LO	DI		NONE	G	S	50	2	0-3 ft		
1/3/2014	CON	NA	11:09:31	11:11:29	CASL	200	0	200	1		None	PL			NONE	E	OC	10	1	0-3 ft		completely jumping out of water repeatedly
1/3/2014	CON	B-6	11:15:48	11:16:12	HSEA	80	45	70	1		Toward	SW-W			I	E	OC	10	1	0-3 ft		
1/3/2014	CON	B-6	11:17:58	11:18:42	HSEA	46	285	40	1	1	None	MI	SI		I	G	S	50	2	0-3 ft		
1/3/2014	CON	B-6	11:17:58	11:18:42	HSEA	46	285	40	1	1	None	MI	SI		I	G	S	50	2	0-3 ft		
1/3/2014	CON	B-6	11:28:20	11:28:22	HSEA	200	0	300	1		Away	MI			I	E	OC	10	1	0-3 ft		
1/3/2014	CON	B-7	11:48:39	11:48:49	HSEA	125	40	150	1		Toward	SW-W	DI		I	E	OC	10	1	0-3 ft		
1/3/2014	CON	B-7	11:55:23	11:55:52	HSEA	70	90	120	1		Toward	SW-W			I	E	OC	10	1	0-3 ft		
1/3/2014	CON	NA	13:26:02	13:26:14	HSEA	120	180	220	1		None	RE			NONE	E	OC	10	1	0-3 ft		
1/3/2014	CON	NA	13:55:34	13:56:21	HSEA	60	200	200	1	1	None	LO	RE		NONE	E	OC	10	1	0-3 ft		
1/3/2014	CON	VX-36	14:14:12	14:14:17	HSEA	70	75	135	1	1	None	RE			V	E	OC	10	1	0-3 ft		
1/4/2014	PRE	NA	8:56:05	8:56:10	HSEA	180	270	70	1		Away	SW-NW			NONE	E	OC	10	1	0-3 ft		

Date	Event Code	Pile	Start Time	End Time	Species	Dist. To animal (m)	Dir. To animal (deg)	Dist to pile (m)	Best num of animals	Num of juv	Relative motion	Behavior 1	Behavior 2	Behavior 3	Const Type	Visi-bility	Weather	Glare (%)	BSS	Wave ht	Swell Dir	Comments
1/4/2014	CON	NA	9:05:32	9:05:48	HSEA	200	60	150	1		Parallel	SW-N			NONE	E	OC	10	1	0-3 ft		
1/4/2014	CON	NA	9:05:51	9:05:56	HSEA	150	290	80	1		None	MI			NONE	E	OC	10	1	0-3 ft		
1/4/2014	CON	VX-36	9:25:56	9:26:11	HSEA	160	0	60	1		Toward	RE	SI		I	E	OC	10	1	0-3 ft		
1/4/2014	CON	VX-36	9:26:28	9:27:01	HSEA	20	275	43	1	1	Toward	MI	SI		I	G	S	50	2	0-3 ft		
1/4/2014	CON	VX-36	9:26:28	9:27:01	HSEA	20	275	43	1	1	Toward	MI	SI		I	G	S	50	2	0-3 ft		
1/4/2014	CON	VX-36	9:28:26	9:28:43	HSEA	160	0	70	1		None	RE			I	E	OC	10	1	0-3 ft		
1/4/2014	CON	VX-36	9:28:51	9:28:55	HSEA	35	200	21	1	1	None	MI			I	G	S	50	2	0-3 ft		
1/4/2014	CON	VX-36	9:28:51	9:28:55	HSEA	35	200	21	1	1	None	MI			I	G	S	50	2	0-3 ft		
1/4/2014	CON	NA	9:33:48	9:34:45	HSEA	160	0	60	1		None	RE			NONE	E	OC	10	1	0-3 ft		
1/4/2014	CON	NA	9:34:14	9:34:20	HSEA	20	5	50	1	1	None	RE	SI		NONE	G	S	50	2	0-3 ft		
1/4/2014	CON	NA	9:34:14	9:34:20	HSEA	20	5	50	1	1	None	RE	SI		NONE	G	S	50	2	0-3 ft		
1/4/2014	CON	NA	10:52:36	10:53:14	HSEA	60	240	120	1	0	None	RE	LO	SI	NONE	E	S	0	1	0-3 ft		
1/4/2014	CON	NA	10:55:57	11:21:28	HSEA	130	260	150	1	0	Away	SW-SW			NONE	E	OC	10	1	0-3 ft		
1/4/2014	CON	NA	11:21:32	11:21:55	HSEA	90	289	9	1	1	None	RE			NONE	E	OC	10	1	0-3 ft		
1/4/2014	CON	NA	12:28:45	12:28:56	HSEA	125	180	230	1	1	None	RE	SI		NONE	E	OC	10	1	0-3 ft		
1/3/2014	CON	VX-34	14:43:05	14:43:12	HSEA	100	270	60	1		Toward	SW-N			V	E	OC	10	1	0-3 ft		
1/3/2014	CON	VX-34	15:01:39	15:01:41	HSEA	120	315	30	1		None	DI			V	E	OC	10	1	0-3 ft		
1/4/2014	CON	VX-34	15:03:38	15:03:41	HSEA	25	315	40	1	1	Away	SW-N			V	G	S	50	2	0-3 ft		
1/4/2014	CON	VX-34	15:03:38	15:03:41	HSEA	25	315	40	1	1	Away	SW-N			V	G	S	50	2	0-3 ft		
1/6/2014	PRE	NA	8:43:21	8:43:32	HSEA	35	270	75	1	0	Toward	SW-S			NONE	E	OC	10	1	0-3 ft		
1/6/2014	PRE	NA	8:49:49	8:49:52	HSEA	75	270	20	1	0	None	LO			NONE	E	OC	10	1	0-3 ft		
1/6/2014	CON	NA	9:07:40	9:07:48	HSEA	20	0	25	1	0	None	LO			NONE	E	OC	10	1	0-3 ft		
1/6/2014	CON	VX-34	9:12:08	9:12:12	HSEA	15	0	21	1	1	None	MI			I	G	OC	0	1	0-3 ft		
1/6/2014	CON	VX-34	9:18:17	9:18:21	HSEA	150	90	200	1	0	Parallel	SW-S	DI		I	E	OC	10	1	0-3 ft		
1/6/2014	CON	VX-34	9:18:23	9:18:45	HSEA	15	289	40	1	1	Toward	RE	SW-S		I	G	OC	0	1	0-3 ft		
1/6/2014	CON	NA	10:17:12	10:17:21	HSEA	30	190	80	1	0	None	RE	SI		NONE	E	OC	10	1	0-3 ft		
1/6/2014	CON	NA	10:21:50	10:21:57	HSEA	53	210	50	1	0	None	RE	SI		NONE	E	OC	10	1	0-3 ft		
1/6/2014	CON	NA	10:28:55	10:29:06	HSEA	55	120	90	1	0	Parallel	SW-S			NONE	E	OC	10	1	0-3 ft		
1/6/2014	CON	NA	10:34:49	10:34:56	HSEA	65	190	10	1	0	None	MI			NONE	E	OC	10	1	0-3 ft		
1/6/2014	CON	NA	10:41:21	10:41:30	HSEA	35	180	70	1	0	Toward	SW-S			NONE	E	OC	10	1	0-3 ft		
1/6/2014	CON	NA	11:04:28	11:04:36	HSEA	25	140	50	1	0	Away	RE	SW-N	SI	NONE	E	OC	10	1	0-3 ft		
1/6/2014	CON	NA	11:33:06	11:33:13	HSEA	20	160	100	1	0	Away	SW-N			NONE	E	OC	10	1	0-3 ft		
1/6/2014	CON	NA	11:37:29	11:37:35	HSEA	50	220	100	1	0	Toward	SW-SE			NONE	E	OC	10	1	0-3 ft		
1/6/2014	CON	NA	11:41:53	11:42:08	HSEA	75	260	100	1	0	Away	SW-NW	DI		NONE	E	OC	10	1	0-3 ft		
1/6/2014	CON	NA	11:47:33	11:47:53	HSEA	25	120	100	1	0	None	LO	DI		NONE	E	OC	10	1	0-3 ft		

Date	Event Code	Pile	Start Time	End Time	Species	Dist. To animal (m)	Dir. To animal (deg)	Dist to pile (m)	Best num of animals	Num of juv	Relative motion	Behavior 1	Behavior 2	Behavior 3	Const Type	Visi-bility	Weather	Glare (%)	BSS	Wave ht	Swell Dir	Comments
1/6/2014	CON	NA	12:02:27	12:02:30	HSEA	120	150	100	1	0	Away	RE			NONE	E	OC	10	1	0-3 ft		
1/6/2014	CON	NA	13:03:51	13:04:01	HSEA	75	10	85	1	0	Parallel	SW-W	DI		NONE	E	OC	10	1	0-3 ft		
1/6/2014	OTHR	NA	13:30:12	13:30:18	CASL	20	150		26		None	RE			OTHER	E	OC	10	1	0-3 ft		Delta count
1/7/2014	PRE	NA	9:01:19	9:01:38	HSEA	40	5	50	1	0	None	RE	DI		NONE	G	L	0	1	0-3 ft		
1/7/2014	PRE	NA	9:12:24	9:12:30	HSEA	50	280	0	1	0	None	RE	DI		NONE	G	L	0	1	0-3 ft		
1/7/2014	PRE	NA	9:23:28	9:23:43	HSEA	15	90	75	1	0	None	RE	DI		NONE	G	R	0	1	0-3 ft		
1/7/2014	CON	NA	10:10:31	10:10:37	HSEA	150	0	150	1	0	None	RE	SI		NONE	G	R	0	1	0-3 ft		pile beng stabbed
1/7/2014	CON	NA	10:13:14	10:13:17	HSEA	50	300	50	1	0	None	RE	SI		NONE	G	R	0	1	0-3 ft		pile being stabbed
1/7/2014	CON	NA	10:25:38	10:25:43	HSEA	25	220	75	1	0	None	RE			NONE	G	R	0	1	0-3 ft		pile being stabbed
1/7/2014	CON	NA	10:32:57	10:33:09	HSEA	80	330	45	1	0	None	RE			NONE	G	R	0	1	0-3 ft		
1/7/2014	CON	NA	10:40:28	10:40:44	HSEA	100	275	20	1	0	None	RE	UN		NONE	G	R	0	1	0-3 ft		Sticking nose in the air
1/7/2014	CON	NA	11:18:54	11:19:06	HSEA	70	300	15	1	0	None	LO			NONE	G	S	50	2	0-3 ft		
1/7/2014	CON	NA	11:25:45	11:25:55	HSEA	70	300	15	1	0	None	RE			NONE	G	S	50	2	0-3 ft		
1/7/2014	CON	NA	14:22:06	14:22:14	HSEA	25	0	50	1	0	Parallel	SW-W			NONE	G	S	50	2	0-3 ft		
1/7/2014	CON	vx-26	14:35:26	14:35:28	HSEA	50	0	50	1	0	Toward	SW-N			I	G	S	50	2	0-3 ft		
1/7/2014	POST	NA	14:48:13	14:48:15	HSEA	26	275	26	1	1	None	LO	SI		NONE	E	OC	10	1	0-3 ft		
1/7/2014	POST	NA	14:59:57	15:00:13	HSEA	40	330	75	1	0	None	RE	DI		NONE	G	S	50	2	0-3 ft		
1/7/2014	POST	NA	15:14:43	15:14:52	HSEA	100	0	50	1	0	None	RE			NONE	G	S	50	2	0-3 ft		
1/8/2014	CON	NA	9:48:14	9:48:30	HSEA	4	75	120	1	0	None	RE	DI		NONE	G	L	0	1	0-3 ft		
1/8/2014	CON	N-1	9:54:29	9:55:00	HSEA	3	90	120	1	0	None	RE	SI		V	G	L	0	1	0-3 ft		
1/8/2014	CON	NA	12:10:01	12:10:05	HSEA	50	10	75	1	0	None	RE			NONE	G	R	0	2	0-3 ft		
1/8/2014	POST	NA	14:09:06	14:09:13	HSEA	60	275	20	1	0	None	LO	SI		NONE	G	R	0	1	0-3 ft		
1/9/2014	CON	NA	8:36:30	8:36:36	HSEA	80	90	70	1	0	Toward	SW-S	DI		NONE	G	OC	0	1	0-3 ft		
1/9/2014	CON	NA	8:51:51	8:52:08	HSEA	90	80	160	1	0	Parallel	SW-S	DI		NONE	G	OC	0	1	0-3 ft		
1/9/2014	CON	VX-28	9:07:00	9:07:06	HSEA	60	75	100	1	0	Parallel	SW-E	DI		I	G	OC	0	2	0-3 ft		
1/9/2014	CON	NA	9:35:05	9:35:36	HSEA	50	90	60	1	0	Away	SW-S			NONE	G	OC	0	1	0-3 ft		
1/9/2014	CON	M-9	10:15:36	10:15:43	HSEA	70	70	80	1	0	Parallel	SW-S	DI		I	G	OC	0	1	0-3 ft		
1/9/2014	CON	NA	10:24:19	10:24:22	HSEA	60	10		1	0	None	LO	DI		NONE	G	OC	0	1	0-3 ft		
1/9/2014	CON	NA	11:15:05	11:15:26	HSEA	120	90	80	1	0	Toward	SW-SW	DI		NONE	M	R	0	1	0-3 ft		
1/9/2014	CON	M-8	11:35:18	11:35:26	HSEA	90	300	25	1	0	Parallel	LO			I	G	R	0	2	0-3 ft		
1/9/2014	CON	NA	11:42:07	11:42:30	HSEA	180	120	180	1	0	Away	SW-S			NONE	G	R	0	2	0-3 ft		could be same animal as #6

Date	Event Code	Pile	Start Time	End Time	Species	Dist. To animal (m)	Dir. To animal (deg)	Dist to pile (m)	Best num of animals	Num of juv	Relative motion	Behavior 1	Behavior 2	Behavior 3	Const Type	Visi-bility	Weather	Glare (%)	BSS	Wave ht	Swell Dir	Comments
1/9/2014	CON	NA	15:00:09	15:01:16	HSEA	140	340	50	1	0	Toward	RE	LO		NONE	E	OC	1	1	0-3 ft		stabbing
1/9/2014	CON	NA	15:02:08	15:04:27	HSEA	50	300	160	1	0	Parallel	FL	SI		NONE	G	R	0	2	0-3 ft		
1/10/2014	CON	NA	11:24:06	11:24:33	HSEA	170	130	50	1	0	Parallel	SW-S	LO		NONE	G	OC	0	2	0-3 ft		
1/10/2014	POST	na	15:17:26	15:17:41	HSEA	80	120	250	2	2	None	MI	LO	SI	NONE	G	L	0	1	0-3 ft		
1/12/2014	CON	VX-27	10:34:30	10:34:34	HSEA	33	200	30	1		Toward	RE	DI		I	E	OC	0	1	0-3 ft		
1/12/2014	CON	VX-27	10:34:37	10:34:42	HSEA	100	90	25	1	1	None	LO			I	E	PC	0	1	0-3 ft		
1/12/2014	CON	VX-27	10:36:33	10:36:36	HSEA	33	200	30	1		None	RE	DI		I	E	OC	0	1	0-3 ft		
1/13/2014	CON	NA	14:20:07	14:20:13	HSEA	65	170	130	1	1	Parallel	SW-N	SI		NONE	E	PC	0	1	0-3 ft		
1/14/2014	CON	NA	8:34:45	8:35:06	HSEA	80	200	85	1	0	None	RE	LO	SI	NONE	G	OC	0	1	0-3 ft		
1/14/2014	CON	NA	8:37:50	8:37:59	HSEA	95	0	90	1	0	Away	SW-E	DI		NONE	G	OC	0	1	0-3 ft		
1/14/2014	CON	NA	8:48:46	8:48:53	HSEA	150	45	280	1	0	Parallel	SW-S	LO	SI	NONE	G	OC	0	1	0-3 ft		
1/14/2014	CON	NA	14:55:14	14:55:36	HSEA	150	30	140	1	0	Parallel	SW-N	LO	DI	NONE	E	OC	0	2	0-3 ft		
1/14/2014	POST	NA	16:42:46	16:43:11	HSEA	45	30	130	1	0	None	MI	LO	SI	NONE	G	S	0	2	0-3 ft		
1/15/2014	CON	NA	8:20:18	8:20:28	HSEA	40	0	100	1	0	None	LO	DI		NONE	G	F	0	1	0-3 ft		
1/15/2014	CON	NA	8:28:12	8:28:15	HSEA	45	270	50	1	0	Away	SW-S			NONE	E	OC	10	1	0-3 ft		
1/15/2014	CON	NA	8:30:13	8:30:28	HSEA	70	340	100	1	0	None	LO			NONE	G	F	0	1	0-3 ft		
1/15/2014	CON	VX-20	8:36:06	8:36:11	HSEA	30	290	25	1	0	None	LO	DI		I	E	OC	10	1	0-3 ft		
1/15/2014	CON	VX-41	8:43:01	8:43:15	HSEA	20	270	30	1	0	None	RE	DI		I	E	OC	10	1	0-3 ft		
1/15/2014	CON	VX-20	8:47:25	8:47:43	HSEA	15	270	30	1	0	None	RE	DI		I	E	OC	10	1	0-3 ft		
1/15/2014	CON	NA	9:32:26	9:32:38	HSEA	35	270	65	1	1	None	RE	SI		NONE	M	F	0	1	0-3 ft		
1/15/2014	CON	NA	9:48:12	9:48:19	HSEA	120	330	100	1	0	None	RE	DI		NONE	G	S	50	2	0-3 ft		
1/15/2014	CON	NA	10:11:04	10:11:20	HSEA	5	10	130	1	1	Parallel	SW-N	DI		NONE	G	S	50	2	0-3 ft		
1/15/2014	CON	B-5	11:42:58	11:43:15	HSEA	10	135	40	1	1	None	LO	SW-S	DI	I	E	OC	10	1	0-3 ft		
1/15/2014	CON	b-5	11:53:12	11:53:17	HSEA	70	90	160	1	0	Toward	SW-W			I	M	F	0	1	0-3 ft		
1/15/2014	CON	NA	12:26:15	12:26:24	HSEA	50	90	90	1	1	Toward	SW-W	LO	DI	NONE	G	OC	0	1	0-3 ft		
1/15/2014	CON	NA	12:30:41	12:31:02	HSEA	20	100	60	1	1	Away	SW-E	LO	DI	NONE	G	OC	0	1	0-3 ft		
1/15/2014	CON	NA	12:43:15	12:43:35	HSEA	20	30	35	1	1	None	LO	RE	DI	NONE	G	OC	0	1	0-3 ft		
1/15/2014	CON	NA	12:48:42	12:49:01	HSEA	60	0	80	1	1	Parallel	SW-N			NONE	G	OC	0	1	0-3 ft		
1/15/2014	MS	B-6	13:09:24	13:09:34	HSEA	15	300	17	1	1	Away	SW-N			NONE	G	OC	0	1	0-3 ft		Shutdown when animal surfaced in to zone. Resumed work after sighting animal outside zone.
1/15/2014	CON	B-6	13:10:20	13:10:42	HSEA	15	45	40	2	2	None	RE	DI		I	E	OC	10	1	0-3 ft		one is the same individual on paula's recent sighting
1/15/2014	CON	B-6	13:12:57	13:13:10	HSEA	15	40	40	2	2	None	RE	DI		I	E	OC	10	1	0-3 ft		same 2 individuals

Date	Event Code	Pile	Start Time	End Time	Species	Dist. To animal (m)	Dir. To animal (deg)	Dist to pile (m)	Best num of animals	Num of juv	Relative motion	Behavior 1	Behavior 2	Behavior 3	Const Type	Visi-bility	Weather	Glare (%)	BSS	Wave ht	Swell Dir	Comments
1/15/2014	CON	B-6	13:14:41	13:15:06	HSEA	15	45	40	1	1	None	RE			I	E	OC	10	1	0-3 ft		same ind. as one of the last 2
1/15/2014	CON	B-6	13:15:20	13:15:24	HSEA	10	45	37	1	1	None	RE	DI		I	E	OC	10	1	0-3 ft		this is the other juvenile from the pair
1/15/2014	CON	NA	13:36:41	13:36:45	HSEA	80	80	160	1	1	Toward	SW-W	DI		NONE	G	OC	0	1	0-3 ft		
1/15/2014	CON	NA	13:47:45	13:48:13	HSEA	20	300	75	1	1	None	LO	RE		NONE	E	OC	10	1	0-3 ft		
1/15/2014	CON	B-8	13:52:24	13:58:00	HSEA	170	180	300	1	0	None	LO	DI		I	G	OC	0	1	0-3 ft		sighted during pause in impact
1/15/2014	CON	NA	14:21:27	14:21:49	HSEA	200	300	450	1	0	Away	SW-SE	DI		NONE	G	F	0	1	0-3 ft		
1/15/2014	CON	VX-18	14:23:42	14:23:55	HSEA	60	25	80	1	1	Toward	MI	LO	DI	V	G	F	0	1	0-3 ft		
1/15/2014	CON	NA	14:27:19	14:27:27	HSEA	15	300	5	1	1	None	MI	SI		NONE	G	OC	0	1	0-3 ft		
1/15/2014	CON	NA	14:29:33	14:29:34	HSEA	45	25	50	1	1	Toward	SW-SW			NONE	G	OC	0	1	0-3 ft		
1/15/2014	CON	VX-18	14:34:53	14:35:13	HSEA	180	40	120	1	0	Away	SW-E			V	G	F	0	1	0-3 ft		
1/15/2014	CON	NA	14:59:12	14:59:42	HSEA	125	40	60	1	0	Parallel	SW-SE			NONE	G	F	0	1	0-3 ft		
1/15/2014	CON	NA	15:11:40	15:11:50	HSEA	15	270	70	1	1	Away	SW-W			NONE	E	OC	10	1	0-3 ft		
1/15/2014	CON	B-9	15:55:40	15:55:54	HSEA	5	315	75	1	1	None	LO	DI		I	E	OC	10	1	0-3 ft		
1/15/2014	CON	B-9	15:57:45	15:57:53	HSEA	30	315	50	1	1	None	RE			I	E	OC	10	1	0-3 ft		
1/15/2014	CON	B-9	15:59:51	16:00:13	HSEA	75	300	30	2	2	Away	SW-N	SW-E	DI	I	E	OC	10	1	0-3 ft		
1/15/2014	CON	B-9	16:01:03	16:01:22	HSEA	40	30	40	2	0	None	MI			I	G	PC	0	1	0-3 ft		
1/15/2014	CON	B-9	16:03:40	16:03:56	HSEA	75	315	40	2	2	None	LO	DI		I	E	OC	10	1	0-3 ft		
1/15/2014	CON	B-5	16:04:01	16:04:08	HSEA	60	25	55	2	0	Away	MI	SW-NE		I	G	OC	0	1	0-3 ft		
1/15/2014	CON	NA	16:11:50	16:11:56	HSEA	130	270	80	1	1	None	RE	LO		NONE	E	PC	0	1	0-3 ft		
1/15/2014	POST	NA	16:29:53	16:29:59	HSEA	80	90	120	1	0	Parallel	SW-W	DI		NONE	E	PC	0	1	0-3 ft		
1/16/2014	PRE	NA	10:24:11	10:24:26	HSEA	50	180	80	1	0	Parallel	SW-W	DI		NONE	G	OC	0	1	0-3 ft		
1/16/2014	CON	NA	10:32:48	10:32:59	HSEA	50	180	80	1	0	Parallel	SW-W	DI		NONE	G	OC	0	1	0-3 ft		
1/16/2014	CON	NA	10:47:57	10:48:25	HSEA	25	10	120	1	1	Parallel	SW-S	DI		NONE	E	OC	0	1	0-3 ft		
1/16/2014	CON	NA	10:56:21	10:56:35	HSEA	5	60	75	1	1	Away	SW-E	LO		NONE	E	OC	0	1	0-3 ft		
1/16/2014	CON	NA	11:01:57	11:02:03	HSEA	65	30	50	1	1	Parallel	SW-E	LO		NONE	E	OC	0	1	0-3 ft		
1/16/2014	CON	A-10	11:02:14	11:02:17	HSEA	20	170	70	1	0	Parallel	SW-E	DI		SSI	G	OC	0	1	0-3 ft		
1/16/2014	CON	A-10	11:05:02	11:07:50	HSEA	20	100	60	1	0	Away	LO	SW-SE	DI	I	G	OC	0	1	0-3 ft		
1/16/2014	CON	A-10	11:10:16	11:10:17	HSEA	10	75	50	1	1	None	LO	DI		I	G	OC	0	2	0-3 ft		
1/16/2014	CON	A-10	11:14:20	11:14:28	HSEA	25	90	50	1	1	Away	DI			I	E	OC	0	1	0-3 ft		dove facing away from
1/16/2014	CON	A-10	11:19:50	11:20:54	HSEA	10	90	50	1	1	Parallel	SW-S	DI		I	G	OC	0	1	0-3 ft		
1/16/2014	CON	B-10	11:44:50	11:44:54	HSEA	40	20	50	1	0	Away	SW-E	DI		I	G	OC	0	1	0-3 ft		
1/16/2014	CON	A-11	14:42:20	14:42:34	HSEA	100	20	250	1	0	Away	SW-E	SI		I	E	PC	2	1	0-3 ft		
1/16/2014	CON	A-11	14:49:08	14:49:12	HSEA	50	200	80	1	0	Parallel	SW-W	DI		I	G	S	50	1	0-3 ft		
1/16/2014	CON	A-11	14:51:08	14:51:31	HSEA	20	0	55	1	1	Parallel	SW-S	LO	DI	I	E	PC	2	1	0-3 ft		
1/16/2014	CON	A-11	14:57:00	14:57:11	HSEA	40	70	60	1	0	Away	SW-E	DI		I	G	S	50	1	0-3 ft		
1/16/2014	CON	B-13	16:02:07	16:02:14	HSEA	65	90	30	1	1	None	LO			I	E	PC	2	1	0-3 ft		
1/16/2014	CON	NA	16:10:16	16:10:45	HSEA	95	130	80	1	1	None	LO			NONE	E	PC	2	1	0-3 ft		
1/16/2014	POST	NA	16:19:07	16:19:12	HSEA	20	15	40	1	1	None	LO	DI		NONE	G	S	30	1	0-3 ft		

Date	Event Code	Pile	Start Time	End Time	Species	Dist. To animal (m)	Dir. To animal (deg)	Dist to pile (m)	Best num of animals	Num of juv	Relative motion	Behavior 1	Behavior 2	Behavior 3	Const Type	Visi-bility	Weather	Glare (%)	BSS	Wave ht	Swell Dir	Comments
1/16/2014	POST	NA	16:21:19	16:21:33	HSEA	65	95	20	1	1	Away	LO	RE		NONE	E	PC	2	1	0-3 ft		
1/17/2014	CON	A-13	10:24:40	10:24:42	HSEA	40	270	30	1	1	Away	SW-E	SW-W		SSI	G	OC	0	2	0-3 ft		
1/17/2014	CON	A-13	10:25:15	10:25:22	HSEA	70	95	30	1	1	None	LO			I	G	OC	0	2	0-3 ft		
1/17/2014	CON	A-13	10:27:08	10:27:32	HSEA	30	80	75	1	0	Away	SW-E			I	E	OC	0	1	0-3 ft		
1/17/2014	CON	A-13	10:34:50	10:35:01	HSEA	40	90	80	1	0	Away	RE			I	E	OC	0	1	0-3 ft		
1/17/2014	CON	NA	10:38:45	10:39:12	HSEA	50	280	40	1	1	None	LO			NONE	G	OC	0	2	0-3 ft		likely same as #1
1/17/2014	CON	NA	10:42:06	10:42:11	HSEA	40	180	140	1	1	None	RE			NONE	G	OC	0	2	0-3 ft		
1/17/2014	CON	B-14	11:21:14	11:21:34	HSEA	120	25	80	1	0	None	LO			I	G	OC	0	2	0-3 ft		
1/17/2014	CON	B-15	11:37:19	11:37:34	HSEA	100	90	75	1	0	Away	SW-E			I	G	OC	0	2	0-3 ft		
1/17/2014	CON	NA	11:50:12	11:50:20	HSEA	30	180	160	1	0	Toward	SW-N	DI		NONE	G	OC	0	2	0-3 ft		larger individual, at surface just prior to impact, dove as impact
1/17/2014	CON	A-16	13:01:12	13:01:27	HSEA	10	120	80	1	0	None	RE			I	E	OC	10	1	0-3 ft		
1/17/2014	CON	NA	13:05:45	13:05:47	HSEA	70	25	80	1	0	Away	SW-SE			NONE	E	OC	10	1	0-3 ft		
1/17/2014	CON	B-16	13:20:23	13:20:46	HSEA	65	50	80	1	0	Away	RE	SI		I	E	S	10	1	0-3 ft		
1/17/2014	CON	NA	13:26:39	13:26:59	HSEA	10	270	30	1	0	None	MI			NONE	G	OC	0	1	0-3 ft		
1/17/2014	CON	NA	13:31:14	13:31:19	HSEA	25	180	85	1	0	Parallel	SW-W	DI		NONE	E	S	0	1	0-3 ft		
1/17/2014	CON	NA	13:38:16	13:38:19	HSEA	60	170	70	1	0	None	MI	DI		NONE	G	OC	0	1	0-3 ft		
1/17/2014	CON	NA	13:42:33	13:42:50	HSEA	45	300	85	1	0	Toward	SW-W			NONE	E	S	0	1	0-3 ft		
1/17/2014	CON	NA	13:49:28	13:49:29	HSEA	25	180	200	1	0	None	SI			NONE	E	S	0	1	0-3 ft		
1/17/2014	CON	VX-19	14:04:28	14:05:00	HSEA	22	275	23	1	0	Parallel	SW-N	SI		I	E	S	10	1	0-3 ft		
1/17/2014	CON	VX-19	14:09:24	14:10:24	HSEA	24	275	25	1	0	Parallel	LO	RE	DI	I	E	S	10	1	0-3 ft		
1/17/2014	CON	NA	14:54:28	14:54:39	HSEA	60	25	80	1	0	Away	SW-NE	SI		NONE	E	S	10	1	0-3 ft		
1/17/2014	CON	B-17	15:37:41	15:37:57	HSEA	77	25	95	1	0	Toward	SW-N	LO		I	E	S	2	2	0-3 ft		
1/17/2014	MD	NA	15:42:32	15:43:08	HSEA	120	100	12	1	0	Toward	LO			NONE	E	S	2	2	0-3 ft		Delay of onset of impact driving when animal surfaced in to zone between drives. Reinitated work after waiting 15 minutes to resight seal.
1/17/2014	CON	A-17	16:06:07	16:06:20	HSEA	50	180	310	1	1	Away	SW-S	DI		I	E	S	0	1	0-3 ft		
1/17/2014	CON	NA	16:17:39	16:17:53	HSEA	20	45	65	1	1	None	MI	LO	DI	NONE	E	S	0	1	0-3 ft		
1/18/2014	CON	NA	12:26:27	12:26:34	HSEA	40	200	80	1	0	None	MI	LO	SI	NONE	E	PC	0	1	0-3 ft		
1/18/2014	CON	NA	12:31:57	12:32:13	HSEA	40	200	80	1	0	Parallel	SW-E			NONE	E	PC	0	1	0-3 ft		
1/18/2014	CON	NA	14:40:15	14:40:19	HSEA	50	280	50	1	1	Away	SW-E			NONE	G	PC	0	1	0-3 ft		
1/18/2014	CON	NA	14:47:19	14:47:22	HSEA	50	290	50	1	1	Toward	SW-W			NONE	G	PC	0	1	0-3 ft		
1/18/2014	CON	NA	15:01:08	15:01:16	HSEA	45	180	110	1	0	None	RE	DI		NONE	E	OC	10	1	0-3 ft		
1/18/2014	CON	NA	15:14:25	15:14:47	HSEA	70	90	185	1	1	Parallel	SW-S	DI		NONE	G	PC	0	1	0-3 ft		
1/18/2014	CON	NA	15:19:02	15:22:09	HSEA	15	350	60	1	0	Parallel	LO	SW-W	SI	NONE	G	OC	0	1	0-3 ft		

Date	Event Code	Pile	Start Time	End Time	Species	Dist. To animal (m)	Dir. To animal (deg)	Dist to pile (m)	Best num of animals	Num of juv	Relative motion	Behavior 1	Behavior 2	Behavior 3	Const Type	Visi-bility	Weather	Glare (%)	BSS	Wave ht	Swell Dir	Comments
1/20/2014	CON	NA	8:43:01	8:43:17	HSEA	110	180	85	1	0	Away	MI	SW-S	DI	NONE	E	OC	0	1	0-3 ft		
1/20/2014	CON	NA	8:58:15	8:58:35	HSEA	220	100	180	1	0	Away	SW-S	LO	DI	NONE	E	OC	0	2	0-3 ft		
1/20/2014	CON	NA	9:00:05	9:00:11	HSEA	100	180	75	1	1	Toward	SW-E	DI		NONE	E	OC	0	2	0-3 ft		
1/20/2014	CON	NA	13:27:34	13:27:45	HSEA	80	90	130	1	1	Away	SW-S	DI		NONE	E	S	2	2	0-3 ft		
1/21/2014	CON	NA	8:26:43	8:26:59	HSEA	40	180	85	1	1	Parallel	SW-S	LO		NONE	G	F	0	1	0-3 ft		
1/21/2014	CON	NA	8:47:29	8:47:35	HSEA	200	220	260	1	0	Away	SW-S	DI		NONE	G	F	0	1	0-3 ft		
1/21/2014	CON	NA	11:06:41	11:06:48	HSEA	40	140	160	1	1	Away	RE	DI		NONE	E	F	0	1	0-3 ft		
1/21/2014	CON	NA	11:24:58	11:25:15	HSEA	100	180	170	1	1	Away	SW-S	DI		NONE	E	F	0	1	0-3 ft		
1/21/2014	CON	NA	11:30:37	11:30:41	HSEA	65	200	60	1	1	Toward	SW-W	DI		NONE	E	F	0	1	0-3 ft		
1/21/2014	CON	VX-14	11:36:18	11:36:24	HSEA	30	0	110	1	0	Toward	DI			I	E	F	0	1	0-3 ft		
1/21/2014	CON	NA	13:20:28	13:20:37	HSEA	200	190	220	1	0	None	RE	DI		NONE	E	PC	10	1	0-3 ft		
1/21/2014	CON	NA	13:57:38	13:57:46	HSEA	135	260	100	1	0	Away	RE	DI		NONE	E	OC	0	1	0-3 ft		
1/22/2014	CON	NA	9:30:48	9:30:54	HSEA	80	200	170	1	0	Away	SW-SW	LO		NONE	E	OC	0	1	0-3 ft		
1/22/2014	CON	NA	12:45:50	12:45:52	HSEA	30	110	60	1	0	Parallel	SW-N	SI		NONE	G	OC	0	1	0-3 ft		
1/22/2014	CON	NA	13:04:29	13:04:46	HSEA	115	65	30	1	1	Away	SW-E			NONE	E	OC	0	1	0-3 ft		
1/22/2014	CON	B-22	13:10:55	13:11:16	HSEA	10	90	250	1	1	None	MI	LO	DI	I	E	OC	0	1	0-3 ft		
1/22/2014	CON	B-22	13:15:21	13:15:39	HSEA	12	310	23	1	1	Away	RE	DI		I	E	OC	0	1	0-3 ft		
1/22/2014	CON	B-22	13:20:03	13:20:30	HSEA	55	210	200	1	1	Toward	SW-NW	DI		I	E	OC	0	1	0-3 ft		
1/22/2014	CON	B-22	13:20:23	13:20:29	HSEA	18	270	25	1	0	Toward	SW-N	DI		I	G	OC	0	1	0-3 ft		
1/22/2014	CON	NA	13:27:15	13:27:17	HSEA	90	90	100	1	0	Toward	SW-S			NONE	E	OC	0	1	0-3 ft		
1/22/2014	CON	NA	13:32:06	13:32:09	HSEA	40	200	65	1	0	Away	SW-S			NONE	G	OC	0	1	0-3 ft		
1/22/2014	CON	B-23	13:34:33	13:34:51	HSEA	80	130	280	1	1	Toward	SW-N	DI		I	E	OC	0	1	0-3 ft		
1/22/2014	CON	B-23	13:36:31	13:36:39	HSEA	23	110	56	1		None	MI			I	G	OC	0	1	0-3 ft		
1/22/2014	CON	B-23	13:37:14	13:37:33	HSEA	70	330	180	1	1	None	MI	LO		I	E	OC	0	1	0-3 ft		
1/22/2014	MS	B-23	13:38:12	13:38:14	HSEA	5	280	14	1	1	Parallel	RE	DI		NONE	E	OC	0	2	0-3 ft		Shutdown impact driving when animal surfaced in to zone. Reinitated work after waiting 15 minutes to resight seal.
1/22/2014	CON	A-23	14:19:37	14:20:15	HSEA	100	280	100	1	0	None	MI			I	G	OC	0	2	0-3 ft		
1/22/2014	CON	NA	15:21:34	15:22:00	HSEA	180	85	230	1	0	None	LO			NONE	E	OC	0	1	0-3 ft		
1/22/2014	CON	NA	15:27:30	15:27:32	HSEA	35	45	75	1	0	None	DI			NONE	E	OC	0	1	0-3 ft		
1/22/2014	POST	NA	16:47:28	16:47:43	HSEA	60	90	200	1	1	Parallel	SW-W	DI		NONE	G	OC	0	1	0-3 ft		
1/23/2014	CON	VX-15	8:31:01	8:31:11	HSEA	45	280	40	1	0	None	RE	DI		SSI	E	OC	10	1	0-3 ft		
1/23/2014	CON	NA	8:53:39	8:53:47	HSEA	20	289	18	1	0	None	RE	SI		NONE	G	OC	50	2	0-3 ft		
1/23/2014	CON	NA	9:21:07	9:21:23	HSEA	100	180	150	1	0	None	RE	DI		NONE	E	OC	10	1	0-3 ft		

Date	Event Code	Pile	Start Time	End Time	Species	Dist. To animal (m)	Dir. To animal (deg)	Dist to pile (m)	Best num of animals	Num of juv	Relative motion	Behavior 1	Behavior 2	Behavior 3	Const Type	Visi-bility	Weather	Glare (%)	BSS	Wave ht	Swell Dir	Comments
1/23/2014	CON	NA	9:31:19	9:31:26	HSEA	190	15		2	0	None	SW-S			NONE	E	OC	10	1	0-3 ft		Up near the trestle
1/23/2014	CON	NA	9:33:58	9:34:17	HSEA	63	90		1	1	Parallel	SW-S	DI		NONE	E	OC	0	1	0-3 ft		
1/23/2014	CON	NA	10:14:07	10:14:45	HSEA	45	37	180	2	0	Parallel	SW-S	DI		NONE	E	OC	10	1	0-3 ft		tied up to Temptation Is.
1/23/2014	MS	R-16	12:00:00	12:00:05	HSEA	84	270	16	1	0	Toward	SW-SW			NONE	E	OC	10	1	0-3 ft		Shutdown when animal surfaced in to zone. Resumed work after sighting animal outside zone.
1/23/2014	CON	NA	12:08:55	12:08:56	HSEA	124	300	75	1	0	None	RE	DI		NONE	E	OC	10	1	0-3 ft		same individual outside zone
1/23/2014	CON	NA	13:17:48	13:17:54	HSEA	100	30	40	1	0	None	RE			NONE	E	OC	10	1	0-3 ft		
1/23/2014	CON	NA	14:26:04	14:26:13	HSEA	20	30	100	1	0	None	RE			NONE	E	OC	10	1	0-3 ft		
1/24/2014	CON	NA	11:38:38	11:42:00	HSEA	68	289	100	1	0	Away	SW-NE	DI		NONE	E	S	50	2	0-3 ft		
1/24/2014	CON	NA	11:42:03	11:42:08	HSEA	38	45	180	1	1		RE	DI		NONE	E	S	50	2	0-3 ft		
1/24/2014	CON	NA	12:46:20	12:46:22	HSEA	30	200	110	1	0	None	LO	DI		NONE	G	S	50	2	0-3 ft		
1/25/2014	CON	NA	11:05:00	11:05:14	HSEA	35	270	130	1	0	Parallel	SW-N	DI		NONE	E	F	10	1	0-3 ft		
1/25/2014	CON	NA	11:23:07	11:23:12	HSEA	60	70	125	1	0	Parallel	DI			NONE	E	OC	10	1	0-3 ft		
1/25/2014	CON	AB-4	13:45:31	13:45:45	HSEA	49	180	69	1	0	None	RE	DI		V	E	S	20	1	0-3 ft		
1/25/2014	CON	NA	13:51:00	13:51:05	HSEA	35	160	170	1	0	None	DI			NONE	E	OC	10	1	0-3 ft		Just finished vibing on Rig 2/VX-29
1/25/2014	CON	NA	15:06:42	15:06:50	HSEA	125	180	150	1	0	None	DI			NONE	E	OC	10	1	0-3 ft		
1/25/2014	CON	NA	15:30:22	15:41:23	HSEA	80	160	190	1	0	None	LO	RE	SI	NONE	E	OC	10	1	0-3 ft		Slowly moving north
1/26/2014	CON	NA	9:00:27	9:00:41	HSEA	40	45	30	1	0	Away	DI	SW-SE		NONE	M	OC	0	2	0-3 ft		
1/26/2014	CON	NA	12:48:15	12:49:47	HSEA	35	100	90	1	0	None	RE	SI		NONE	G	OC	10	1	0-3 ft		
1/26/2014	POST	NA	13:07:52	13:08:03	HSEA	45	115	100	1	0	None	LO	RE	DI	NONE	G	OC	10	1	0-3 ft		
1/26/2014	POST	NA	13:14:47	13:15:08	HSEA	20	180	60	1	0	None	RE	SI		NONE	G	S	50	2	0-3 ft		
1/26/2014	POST	NA	13:21:02	13:21:42	HSEA	30	190	50	1	0	None	RE			NONE	G	S	50	2	0-3 ft		
1/27/2014	CON	NA	8:54:26	8:55:54	HSEA	25	100	30	1	0	None	LO	SI		NONE	E	OC	0	1	0-3 ft		
1/27/2014	CON	NA	8:55:56	8:56:06	CASL	60	180	70	1	0	Away	SW-S	SW-E	DI	NONE	E	OC	0	1	0-3 ft		
1/27/2014	CON	AB-1	9:28:04	9:28:13	HSEA	30	95	125	1	0	Parallel	SW-S	DI		V	E	OC	0	1	0-3 ft		
1/27/2014	CON	AB-1	9:34:57	9:35:02	HSEA	100	225	250	1	0	Parallel	SW-S			V	E	OC	10	1	0-3 ft		
1/27/2014	CON	NA	12:36:41	12:36:52	CASL	50	30	50	1		Away	SW-S			NONE	E	OC	10	1	0-3 ft		
1/27/2014	CON	AB-1	14:55:42	14:56:07	HSEA	100	90	200	1	0	Parallel	SW-S			I	E	OC	10	1	0-3 ft		
1/29/2014	CON	NA	11:21:56	11:21:59	HSEA	70	10		1	0	None	SW-E	DI		NONE	G	L	0	1	0-3 ft		
1/29/2014	CON	NA	12:54:57	12:55:05	HSEA	75	200	180	1	0	Away	SW-S			NONE	E	OC	0	2	0-3 ft		

Date	Event Code	Pile	Start Time	End Time	Species	Dist. To animal (m)	Dir. To animal (deg)	Dist to pile (m)	Best num of animals	Num of juv	Relative motion	Behavior 1	Behavior 2	Behavior 3	Const Type	Visi-bility	Weather	Glare (%)	BSS	Wave ht	Swell Dir	Comments
1/30/2014	CON	AB-3	11:31:35	11:32:10	HSEA	200	90	200	1	0	Toward	SW-N	DI		I	G	OC	10	1	0-3 ft		
1/30/2014	CON	NA	16:22:50	16:23:59	HSEA	125	280	300	1	0	Away	SW-S	DI		NONE	E	OC	0	1	0-3 ft		
1/31/2014	CON	NA	8:34:57	8:35:05	HSEA	60	170	105	1	0	Away	SW-SE			NONE	E	OC	0	1	0-3 ft		
1/31/2014	CON	NA	10:59:37	11:00:00	HSEA	80	340	60	1	0	Away	SW-SW	SI		NONE	E	OC	0	1	0-3 ft		
1/31/2014	CON	NA	11:03:28	11:03:39	HSEA	120	330	100	1	0	None	RE	UN		NONE	E	OC	0	1	0-3 ft		Sticking nose vertically in the air
1/31/2014	CON	NA	11:47:51	11:47:55	HSEA	42	180		1	1	None	SW-NE			NONE	E	OC	0	1	0-3 ft		
1/31/2014	CON	NA	12:08:53	12:09:20	CASL	140	170		1	0	Away	TR-S	DI		NONE	E	OC	0	1	0-3 ft		
1/31/2014	CON	NA	14:33:28	14:33:48	HSEA	10	180	45	1	1	None	LO	DI		NONE	E	OC	10	1	0-3 ft		
2/1/2014	CON	NA	9:02:31	9:02:52	HSEA	180	15		1	0	Away	SW-W	DI		NONE	E	OC	0	0	0-3 ft		
2/1/2014	CON	NA	9:27:24	9:27:48	HSEA	30	200	55	1	0	Toward	RE	SI		NONE	E	OC	0	0	0-3 ft		
2/1/2014	CON	AB-10	10:14:56	10:14:57	HSEA	44	25	20	1	0	Toward	RE	DI		NONE	G	OC	10	1	0-3 ft		
2/1/2014	CON	VX-10	11:20:10	11:20:21	HSEA	16	220	65	1	1	None	RE	DI		NONE	E	OC	10	1	0-3 ft		
2/1/2014	CON	NA	11:24:52	11:24:54	HSEA	100	310	70	1	0	Away	SW-W			NONE	E	OC	0	0	0-3 ft		
2/1/2014	CON	NA	11:53:47	11:54:12	HSEA	60	90		1	0	None	FL	RE	SI	NONE	E	OC	0	0	0-3 ft		
2/1/2014	CON	NA	12:04:09	12:04:14	HSEA	205	110		1	0	Parallel	SW-N	SI		NONE	E	PC	0	0	0-3 ft		Along shore; during lunch break
2/1/2014	CON	NA	13:07:05	13:07:24	HSEA	45	15		1	1	None	RE	SI		NONE	G	S	50	2	0-3 ft		
2/1/2014	CON	NA	13:57:30	13:57:51	HSEA	110	210	140	1	0	Parallel	SW-E	SI		NONE	G	S	5	0	0-3 ft		
2/1/2014	CON	NA	14:07:37	14:07:42	HSEA	80	45	50	1	0	Parallel	SW-NW	SI		NONE	G	S	5	0	0-3 ft		
2/1/2014	CON	Temp-2	14:27:44	14:27:47	HSEA	100	270	180	1	0	None	RE	SI		NONE	E	S	30	1	0-3 ft		
2/1/2014	CON	Temp-2	15:07:55	15:08:00	HSEA	180	195	210	1	0	None	RE	SI		NONE	E	OC	10	1	0-3 ft		
2/3/2014	CON	AB-9	9:04:40	9:04:42	HSEA	80	90	70	1	0	None	RE	DI		NONE	G	OC	0	1	0-3 ft		
2/3/2014	CON	AB-9	9:14:05	9:14:12	HSEA	68	90	58	1	0	None	RE	DI		NONE	G	OC	0	1	0-3 ft		
2/3/2014	CON	AB-9	9:23:05	9:23:09	HSEA	59	60	49	1	0	None	RE	DI		NONE	G	OC	0	1	0-3 ft		
2/3/2014	CON	NA	9:53:03	9:53:08	HSEA	70	45	50	1	0	None	LO	DI		NONE	G	PC	20	2	0-3 ft		
2/3/2014	CON	NA	11:12:36	11:12:44	HSEA	10	250	40	1	0	None	RE	SI		NONE	G	S	40	2	0-3 ft		
2/3/2014	CON	NA	11:43:33	11:43:35	HSEA	10	80	40	1	0	None	LO	DI		NONE	G	S	50	2	0-3 ft		
2/4/2014	CON	VX-11	8:43:24	8:43:36	HSEA	45	70	125	1	0	None	RE	DI		NONE	E	OC	0	1	0-3 ft		
2/4/2014	CON	N/A	9:34:03	9:34:05	HSEA	100	260	150	1	0	None	RE			NONE	E	OC	10	1	0-3 ft		
2/4/2014	CON	N/A	9:38:15	9:38:19	HSEA	50	0	50	1	0	None	RE	DI		NONE	E	OC	10	1	0-3 ft		

Date	Event Code	Pile	Start Time	End Time	Species	Dist. To animal (m)	Dir. To animal (deg)	Dist to pile (m)	Best num of animals	Num of juv	Relative motion	Behavior 1	Behavior 2	Behavior 3	Const Type	Visi-bility	Weather	Glare (%)	BSS	Wave ht	Swell Dir	Comments
2/4/2014	CON	vx-11	10:03:08	10:03:32	HSEA	126	275	165	1	1	None	RE	SI		NONE	E	S	10	1	0-3 ft		Vertical with nose in the air
2/4/2014	CON	VX-11	10:08:54	10:09:14	HSEA	62	255	150	1	1	None	RE	DI		NONE	E	S	10	1	0-3 ft		nose up
2/4/2014	CON	VX-11	10:12:14	10:12:31	HSEA	100	280	145	1	1	None	RE	SI		NONE	E	S	10	1	0-3 ft		nose up
2/4/2014	CON	VX-11	11:02:02	11:02:05	HSEA	60	15	45	1	1	None	LO	SI		I	E	OC	10	1	0-3 ft		
2/5/2014	PRE	NA	8:33:27	8:33:34	HSEA	25	330	75	1	1	None	RE			NONE	E	OC	10	1	0-3 ft		
2/5/2014	CON	VX-2	8:36:04	8:36:09	HSEA	25	330	75	1	1	None	RE	DI		NONE	E	OC	10	1	0-3 ft		Same individual in same location
2/5/2014	CON	VX-2	8:57:07	8:57:37	HSEA	100	155	200	1	0	Away	SW-S	DI		NONE	E	OC	10	1	0-3 ft		
2/5/2014	CON	L-37	10:31:26	10:35:28	HSEA	40	135	40	1	0	None	RE	DI		I	E	OC	10	1	0-3 ft		Surfaced and dived multiple times
2/5/2014	CON	L-37	10:40:15	10:40:35	HSEA	25	90	50	1	0	None	RE	DI		NONE	E	OC	10	1	0-3 ft		
2/5/2014	CON	L-37	10:46:21	10:46:37	HSEA	60	90	60	1	0	Away	SW-N	DI		NONE	E	S	10	1	0-3 ft		
2/5/2014	CON	N-36	10:58:28	10:58:34	HSEA	35	80	30	1	0	Away	SW-SE	DI		NONE	E	S	50	0	0-3 ft		
2/5/2014	CON	na	13:22:22	13:22:33	HSEA	80	310		1	0	None	MI	DI		NONE	E	S	20	1	0-3 ft		
2/5/2014	CON	NA	13:54:38	14:00:40	HSEA	45	170	170	1	0	Toward	LO	SI	SW-N	NONE	E	OC	10	1	0-3 ft		Also resting
2/5/2014	CON	NA	14:17:21	14:20:01	HSEA	50	80	200	1	1	Toward	SW-N	RE		NONE	E	OC	10	1	0-3 ft		
2/5/2014	CON	NA	15:28:37	15:28:50	HSEA	110	35	60	1	0	Away	SW-E	RE	DI	NONE	E	S	10	1	0-3 ft		
2/5/2014	CON	VX-4	16:06:09	16:06:18	HSEA	50	45	100	1	0	None	RE	SI		NONE	E	OC	10	1	0-3 ft		
2/5/2014	CON	VX-4	16:11:05	16:16:13	HSEA	50	180	150	1	1	None	RE	SI		NONE	E	OC	10	1	0-3 ft		Sank and resurfaced twice
2/5/2014	CON	VX-4	16:22:21	16:22:30	HSEA	15	90	150	1	0	None	RE			NONE	E	OC	10	1	0-3 ft		
2/5/2014	CON	VX-4	17:09:04	17:09:36	HSEA	100	270	40	1	0	None	RE			I	E	OC	10	1	0-3 ft		
2/5/2014	POST	VX-4	17:13:10	17:13:20	HSEA	20	240	25	1	0	Away	SW-S	DI		NONE	G	S	5	1	0-3 ft		
2/6/2014	PRE	NA	8:50:36	8:51:18	HSEA	50	160	400	1	0	None	RE	SI		NONE	G	S	0	1	0-3 ft		
2/6/2014	CON	NA	9:53:27	9:53:43	HSEA	30	90	90	1	0	Toward	SW-W	LO	SI	NONE	G	S	50	2	0-3 ft		
2/6/2014	CON	B-9	11:11:41	11:11:45	HSEA	45	270	23	1	1	None	MI	SI		NONE	G	OC	0	1	0-3 ft		
2/6/2014	CON	NA	16:57:10	16:57:12	HSEA	10	0	50	1	1	None	DI			V	G	S	50	2	0-3 ft		
2/7/2014	CON	VX-1	8:19:17	8:19:23	HSEA	20	240	175	1	0	Parallel	SW-W			NONE	G	S	50	2	0-3 ft		
2/7/2014	CON	VX-5	9:46:41	9:46:57	HSEA	100	135	150	1	0	Away	SW-S			NONE	G	S	50	2	0-3 ft		
2/7/2014	CON	NA	10:14:38	10:14:49	HSEA	225	190		1	0	None	LO	SI		NONE	G	S	20	2	0-3 ft		
2/8/2014	PRE	NA	7:40:46	7:40:55	HSEA	100	180	200	1	0	Toward	SW-N			NONE	E	OC	10	1	0-3 ft		Near Marginal
2/8/2014	PRE	AB-7	8:05:42	8:05:57	HSEA	20	190	100	1	0	Parallel	SW-W	DI		NONE	E	OC	10	1	0-3 ft		
2/8/2014	CON	N/A	8:34:10	8:34:52	HSEA	75	180	110	1	0	None	LO	RE		NONE	E	OC	10	1	0-3 ft		Stuck nose way up in the air

Date	Event Code	Pile	Start Time	End Time	Species	Dist. To animal (m)	Dir. To animal (deg)	Dist to pile (m)	Best num of animals	Num of juv	Relative motion	Behavior 1	Behavior 2	Behavior 3	Const Type	Visi-bility	Weather	Glare (%)	BSS	Wave ht	Swell Dir	Comments
2/8/2014	CON	N/A	8:41:34	8:41:37	HSEA	40	200	70	1	0	None	RE			NONE	E	OC	10	1	0-3 ft		
2/8/2014	CON	VX-41	8:47:40	8:47:58	HSEA	60	170	99	1	1	Parallel	RE	MI	DI	NONE	E	OC	10	1	0-3 ft		
2/8/2014	CON	NA	9:36:41	9:36:46	HSEA	10	195	25	1	0	None	LO	SI		NONE	E	OC	10	1	0-3 ft		
2/8/2014	OTHR	NA	9:56:36	9:56:38	CASL				27	0	None	HO	LO		OTHER	E	OC	10	1	0-3 ft		Mammal count. 8 package/north. 19 Fence. All CASL, no Stellar. SHJ observer.
2/8/2014	CON	AB-7	10:15:31	10:15:38	CASL	20	180	35	1	0	None	CH	DI		NONE	G	OC	10	1	0-3 ft		
2/8/2014	CON	B-12	10:32:36	10:33:24	HSEA	45	270	50	1	1	None	LO			NONE	E	OC	10	1	0-3 ft		Nose up
2/8/2014	CON	B-12	10:35:14	10:35:40	HSEA	40	200	100	1	0	None	LO	DI		NONE	E	OC	10	1	0-3 ft		
2/8/2014	CON	b-12	10:46:35	10:46:37	HSEA	50	270	100	1	0	None	RE	DI		NONE	E	OC	10	1	0-3 ft		
2/8/2014	CON	VX-7	16:42:02	16:42:20	HSEA	55	180	350	1	0	Toward	PO	TR-N		NONE	E	OC	10	1	0-3 ft		Porpoised out of water (completely) 4-5 times. Flushed ~100 SUSC
2/10/2014	CON	B-23	10:05:00	10:05:09	CASL	15	100	50	1	0	Parallel	SW-N	DI		NONE	E	OC	15	2	0-3 ft		
2/10/2014	CON	H-8	14:34:22	14:34:29	HSEA	100	120	220	1	0	None	RE	SI		V	E	OC	0	1	0-3 ft		
2/13/2014	CON	NA	8:21:04	8:21:52	HSEA	45	190	100	1	0	None	RE	SI		NONE	E	PC	0	1	0-3 ft		
2/13/2014	CON	AB-8	11:32:05	11:32:14	HSEA	50	90	200	1	0	None	RE			NONE	E	OC	0	1	0-3 ft		No bubble curtain used
2/13/2014	CON	D-1	14:12:09	14:12:15	HSEA	50	280	150	1	0	Away	SW-S			I	E	OC	0	1	0-3 ft		No bubble curtain used
2/13/2014	CON	D-2	16:56:13	16:56:22	HSEA	25	49	45	1	0	Toward	RE	SW-W		I	G	S	50	2	0-3 ft		No bubble curtain
2/13/2014	CON	E-1	17:12:12	17:12:29	HSEA	40	90	150	1	0	Toward	SW-S			I	E	OC	0	1	0-3 ft		No bubble curtain used
2/14/2014	CON	NA	8:42:03	8:42:40	HSEA	200	200		1	0	None	SW-S	SI		NONE	E	OC	0	1	0-3 ft		
2/14/2014	CON	V-23	10:29:53	10:29:54	HSEA	30	90	150	1	0	None	RE	DI		NONE	E	OC	0	1	0-3 ft		
2/13/2014	CON	NA	9:19:40	9:20:13	HSEA	60	150	170	1	0	Away	SW-SW	DI		NONE	E	OC	10	1	0-3 ft		

APPENDIX G
Weather Conditions

Appendix G
Weather Conditions

Date	Water Temperature (°F)	Max Wind Speed (mph)	Wind Speed (mph)	Air Temperature (°F)	Pressure (mmHg)	Weather Conditions	Sea State	Max Sea State
7/16/2013	54.3	12	2	70	754.8	OC/PC/S	1-2	2
7/18/2013	54.3	13	3	64	763.4	OC	1-1	1
7/19/2013	53.3	10	3	62	761.6	S	0-1	1
7/22/2013	51.2	9	2	64	758.8	OC/S	1-1	1
7/23/2013	50.8	13	2	62	759.5	F/OC/S	1-1	1
7/24/2013	50.3	11	3	62	759.5	S	0-1	1
7/25/2013	50.1	10	2	62	760.7	F/S	0-2	2
7/26/2013	50.3	12	3	62	761.6	S	1-2	2
7/27/2013	50.8	11	3	62	760.7	S	0-2	2
7/29/2013	51.6	10	2	63	758.2	PC/S	0-2	2
7/30/2013	52.6	12	1	62	760.7	OC/PC/S	0-1	1
7/31/2013	53.1	9	1	61	760.3	F/OC/PC/S	0-1	1
8/1/2013	53.2	12	1	63	759.6	OC/PC	1-2	2
8/2/2013	52.8	7	0	60	761.1	L/OC/R	0-1	1
8/3/2013	52.8	12	1	64	761.4	OC/PC	0-2	2
8/5/2013	52.1	14	2	63	757.9	F/PC/S	1-1	1
8/6/2013	51.4	11	1	62	757.8	F/S	1-2	2
8/7/2013	51.2	6	1	62	758.2	F/S	1-2	2
8/8/2013	51.0	12	1	63	758.4	S	0-2	2
8/9/2013	51.0	10	1	63	755.9	S	1-2	2
8/12/2013	51.0	13	1	63	759.7	OC/S	1-1	1
8/13/2013	51.6	14	2	63	759.3	OC/S	1-2	2
8/14/2013	51.6	15	2	64	756.4	OC/PC/S	0-1	1
8/15/2013	51.4	9	1	64	757.6	OC/S	1-1	1
8/16/2013	51.7	11	1	67	757.9	OC/PC/S	0-1	1
8/19/2013	50.8	12	1	65	760.9	OC/PC/S	1-2	2
8/20/2013	50.5	17	2	64	761.9	S	1-2	2
8/21/2013	50.8	17	2	64	758.8	S	1-2	2
8/22/2013	51.1	11	1	64	755.4	OC/PC/S	0-1	1
8/26/2013	50.5	20	2	63	755.9	L/PC	1-2	2
8/27/2013	50.6	12	2	66	755.4	OC/PC/S	1-1	1
8/28/2013	51.3	13	1	67	754.9	PC/S	0-1	1
8/29/2013	51.4	20	2	66	756.4	L/OC/PC/R	0-3	3
8/30/2013	52.0	14	2	65	760.0	PC/S	1-2	2
9/3/2013	52.2	9	1	63	758.3	OC/PC/S	1-1	1
9/4/2013	51.9	12	1	62	759.6	L/OC/PC	1-1	1
9/5/2013	51.3	13	1	61	758.4	OC/PC/R/S	0-1	1
9/6/2013	51.8	15	0	64	759.0	L/OC/PC/R	0-1	1
9/9/2013	--	7	0	61	759.2	F/S	1-2	2
9/10/2013	--	14	1	63	756.9	S	1-2	2
9/11/2013	--	8	0	69	755.9	S	0-1	1
9/12/2013	--	1	0	59	757.4	F/OC/PC/S	0-2	2
9/13/2013	--	1	0	62	756.7	F/OC	1-1	1
9/16/2013	--	9	1	61	755.3	L/OC/R	1-2	2
9/17/2013	50.8	6	0	59	756.4	OC/PC	1-1	1
9/18/2013	50.5	6	0	57	759.0	OC/PC/S	1-1	1

Date	Water Temperature (°F)	Max Wind Speed (mph)	Wind Speed (mph)	Air Temperature (°F)	Pressure (mmHg)	Weather Conditions	Sea State	Max Sea State
9/19/2013	50.6	5	0	59	756.2	F/PC/S	1-1	1
9/20/2013	50.2	16	0	59	750.2	S	1-1	1
9/23/2013	50.0	13	1	56	754.5	L/OC/PC	1-2	2
9/24/2013	50.3	8	0	54	756.4	L/OC/PC/R	0-1	1
9/25/2013	50.3	20	4	54	757.7	OC/PC/S	1-3	3
9/26/2013	50.4	4	0	51	760.9	F/PC/S	0-1	1
9/27/2013	51.1	18	2	55	757.9	OC	2-3	3
9/28/2013	50.8	25	3	56	747.8	L/R	2-3	3
9/30/2013	--	25	2	54	749.0	L/OC/PC/S	1-2	2
10/1/2013	--	23	2	53	758.4	L/OC/PC/R/S	1-2	2
10/2/2013	--	14	1	52	762.1	L/OC/PC/R	1-1	1
10/3/2013	--	1	0	49	764.5	OC/PC	1-1	1
10/4/2013	--	1	0	52	768.9	F/PC	1-2	2
10/7/2013	--	20	1	55	757.0	OC/PC	1-2	2
10/8/2013	--	26	2	51	759.5	PC	1-3	3
10/9/2013	--	8	0	50	760.1	PC	1-3	3
10/10/2013	--	5	0	51	759.2	OC/PC	1-1	1
10/11/2013	--	5	0	51	761.7	OC	1-1	1
10/12/2013	--	10	2	51	762.8	F/OC/PC/S	1-2	2
10/14/2013	--	11	1	48	769.2	OC	1-1	1
10/15/2013	51.0	6	0	49	766.3	F/OC/PC	0-1	1
10/16/2013	50.2	18	2	52	763.5	F/PC/S	0-2	2
10/17/2013	50.1	3	0	52	765.0	OC/PC/S	1-2	2
10/18/2013	49.9	--	--	--	--	F/OC/S	1-1	1
10/19/2013	49.5	--	--	--	--	OC	1-2	2
10/21/2013	49.3	--	--	--	--	F/OC/S	1-2	2
10/22/2013	49.3	--	--	--	--	F/OC/S	1-2	2
10/23/2013	49.4	--	--	--	--	F/OC/S	1-1	1
10/24/2013	49.2	--	--	--	--	F/OC	1-1	1
10/25/2013	49.2	--	--	--	--	OC	0-1	1
10/26/2013	49.3	4	0	51	764.9	OC/S	1-1	1
10/29/2013	49.1	7	0	45	758.7	S	0-1	1
10/30/2013	49.3	20	0	47	760.9	OC/S	0-1	1
10/31/2013	49.5	23	0	52	762.5	OC/PC/S	0-1	1
11/1/2013	49.5	12	0	54	759.8	OC/PC/S	1-1	1
11/4/2013	48.0	10	0	44	762.0	OC/PC	0-1	1
11/5/2013	48.0	13	1	47	762.4	F/L/OC	0-1	1
11/6/2013	47.9	8	1	47	763.4	OC	1-1	1
11/8/2013	85.1	5	0	49	760.3	OC	1-1	1
11/9/2013	48.1	5	0	46	762.0	L/OC	1-1	1
11/11/2013	47.9	3	0	48	761.2	OC/PC/S	1-1	1
11/12/2013	48.0	20	2	54	763.3	PC/R	1-1	1
11/13/2013	48.0	16	0	52	768.6	OC/PC	1-1	1
11/14/2013	47.9	5	0	50	763.8	L/OC/PC	1-1	1
11/15/2013	47.7	20	1	47	751.1	OC/PC	1-1	1
11/16/2013	47.4	12	1	43	747.3	OC/PC/S	0-1	1
11/18/2013	47.4	19	1	50	751.2	OC/R	1-2	2
11/19/2013	47.4	26	4	45	754.1	OC/R	1-2	2
11/20/2013	47.2	20	6	40	766.7	S	1-2	2

Date	Water Temperature (°F)	Max Wind Speed (mph)	Wind Speed (mph)	Air Temperature (°F)	Pressure (mmHg)	Weather Conditions	Sea State	Max Sea State
11/21/2013	47.0	14	2	38	774.2	S	1-1	1
11/22/2013	47.1	14	3	40	773.4	PC/S	1-2	2
11/23/2013	47.1	7	0	39	767.6	PC/S	1-1	1
11/25/2013	47.1	3	0	41	766.3	PC/S	1-1	1
11/26/2013	47.0	8	0	42	763.8	OC/S	1-1	1
11/27/2013	47.0	5	0	45	759.7	S	1-1	1
12/2/2013	46.5	17	1	41	757.6	PC/S	1-1	1
12/3/2013	46.2	29	12	38	763.8	S	1-2	2
12/4/2013	46.0	16	2	34	767.5	PC/S	1-2	2
12/5/2013	45.9	3	0	30	765.8	OC/PC	1-1	1
12/6/2013	45.8	21	3	29	764.7	PC/S	1-1	1
12/7/2013	45.5	23	9	28	768.1	PC/R/S	1-2	2
12/9/2013	45.2	6	0	30	772.9	OC/PC/S	1-2	2
12/10/2013	45.4	6	0	35	771.0	OC/PC/S	1-2	2
12/11/2013	45.3	2	0	34	766.8	OC/S	1-1	1
12/12/2013	45.3	27	4	39	760.9	L/OC/R/S	1-2	2
12/13/2013	45.6	13	0	45	765.4	OC/PC	1-1	1
12/14/2013	45.7	14	1	47	768.3	OC/S	1-1	1
12/16/2013	45.7	8	0	45	768.9	S	1-1	1
12/17/2013	45.6	9	0	42	763.9	OC	1-2	2
12/18/2013	45.6	20	4	42	761.6	OC/PC	1-1	1
12/19/2013	45.3	29	5	38	766.1	OC	1-1	1
12/21/2013	45.3	9	0	43	759.2	L/OC/S	1-1	1
12/23/2013	45.6	19	2	48	767.1	OC/S	1-1	1
12/24/2013	45.5	7	2	40	773.6	OC/S	0-1	1
12/27/2013	45.3	13	1	40	764.7	OC	1-1	1
12/28/2013	45.5	6	0	43	770.1	OC/PC/S	1-1	1
12/30/2013	45.4	14	0	43	764.5	OC	1-1	1
12/31/2013	45.5	6	1	44	765.7	OC	1-1	1
1/2/2014	--	18	3	50	757.6	OC	1-2	2
1/3/2014	--	13	1	42	763.3	OC/S	1-2	2
1/4/2014	--	15	2	40	769.9	OC/S	1-2	2
1/6/2014	--	9	0	38	764.8	OC	1-1	1
1/7/2014	--	19	3	45	760.1	L/OC/R/S	1-2	2
1/8/2014	--	19	3	48	754.1	L/R	1-2	2
1/9/2014	45.3	22	2	43	754.8	OC/R	1-2	2
1/10/2014	45.3	24	3	47	753.5	L/OC	1-2	2
1/12/2014	45.3	21	1	48	760.0	OC/PC	1-1	1
1/13/2014	45.4	13	1	57	770.8	PC	1-1	1
1/14/2014	45.5	5	0	58	775.8	OC/S	1-2	2
1/15/2014	45.6	10	1	56	774.3	F/OC/PC/S	1-2	2
1/16/2014	45.5	15	3	58	771.0	OC/PC/S	1-2	2
1/17/2014	45.5	14	4	57	766.6	OC/S	1-2	2
1/18/2014	45.5	10	1	56	765.0	OC/PC	1-1	1
1/20/2014	45.5	12	3	58	767.5	OC/S	1-2	2
1/21/2014	45.4	10	1	51	766.4	F/OC/PC	1-1	1
1/22/2014	45.5	14	3	43	769.1	OC	1-2	2
1/23/2014	45.3	18	4	43	770.5	OC	1-2	2
1/24/2014	45.4	10	1	44	768.3	S	2-2	2

Date	Water Temperature (°F)	Max Wind Speed (mph)	Wind Speed (mph)	Air Temperature (°F)	Pressure (mmHg)	Weather Conditions	Sea State	Max Sea State
1/25/2014	45.3	4	1	40	767.8	F/OC/S	1-1	1
1/26/2014	45.2	10	1	39	764.4	OC/S	1-2	2
1/27/2014	45.2	7	0	39	763.8	OC	1-1	1
1/29/2014	45.4	16	3	45	753.4	L/OC	1-2	2
1/30/2014	45.3	9	0	44	754.9	OC	1-1	1
1/31/2014	45.2	13	2	41	760.0	OC	1-1	1
2/1/2014	45.3	5	1	40	762.6	OC/PC/S	0-2	2
2/3/2014	44.9	27	14	37	762.0	OC/PC/S	1-2	2
2/4/2014	44.6	18	7	33	767.3	OC/S	1-1	1
2/5/2014	44.4	8	0	26	770.0	OC/S	0-1	1
2/6/2014	44.3	11	0	24	761.1	OC/S	1-2	2
2/7/2014	44.3	24	4	29	755.9	S	2-2	2
2/8/2014	44.0	22	5	34	757.9	OC	1-1	1
2/10/2014	44.2	24	3	43	759.3	OC	1-2	2
2/13/2014	44.7	11	2	48	755.9	OC/PC/S	1-2	2
2/14/2014	44.8	20	1	47	752.9	OC	1-1	1
2/15/2014	44.7	28	1	42	747.9	OC	1-1	1