INCIDENTAL HARASSMENT AUTHORIZATION APPLICATION: ACTIVITIES RELATED TO THE DEMOLITION OF PIER E3 OF THE EAST SPAN OF THE ORIGINAL SAN FRANCISCO-OAKLAND BAY BRIDGE

March 3, 2015

For:

California Department of Transportation
San Francisco-Oakland Bay Bridge Toll Bridge Program
255 Burma Road
Oakland, CA 94607

TABLE OF CONTENTS

1. A Detailed Description of The Specific Activity Or Class of Activities That Can Be Expected To Result In Incidental Taking of Marine Mammals..... 1
2. Date(s) and Duration of Such Activity And The Specific Geographical Region Where It Will Occur.....19
3. Species and Numbers of Marine Mammals Likely To Be Found Within the Activity Area..... 20
4. Status, Distribution, And Seasonal Distribution Of The Affected Species Or Stocks Of Marine Mammals..... 23
5. Type of Incidental Taking Authorization That Is Being Requested..... 31
6. Number Of Marine Mammals That May Be Taken. 46
7. Anticipated Impact Of The Activity Upon The Species Or Stock. 51
8. Anticipated Impact Of The Activity On The Availability Of The Species Or Stocks For Subsistence Uses. 52
9. Anticipated Impact Of The Activity Upon The Habitat, And Likelihood Of Restoration Of The Affected Habitat. 53
10. Anticipated Impact Of The Loss Or Modification Of The Habitat On The Populations Involved. 54
11. Availability And Feasibility Of Equipment, Methods, And Manner Of Conducting Such Activity Or Other Means Of Effecting The Least Practicable Adverse Impact Upon The Affected Species Or Stocks, Their Habitat, And On Their Availability For Subsistence Uses, Paying Particular Attention To Rookeries, Mating Grounds, And Areas Of Similar Significance..... 55
12. Where The Proposed Activity Would Take Place In Or Near A Traditional Arctic Subsistence Hunting Area And/Or May Affect The Availability Of A Species Or Stock Of Marine Mammal For Arctic Subsistence Uses, The Applicant Must Submit Either A "Plan Of Cooperation" Or Information That Identifies What Measures Have Been Taken And/Or Will Be Taken To Minimize Any Adverse Effects On The Availability Of Marine Mammals For Subsistence Uses. 57
13. The Suggested Means Of Accomplishing The Necessary Monitoring And Reporting That Will Result In Increased Knowledge Of The Species, The Level Of Taking Or Impacts On Populations Of Marine Mammals That Are Expected To Be Present While Conducting Activities And Suggested Means Of Minimizing Burdens By Coordinating Such Reporting Requirements With Other Schemes Already Applicable To Persons Conducting Such Activity. Monitoring Plans Should Include A Description Of The Survey Techniques That Would Be Used To Determine The Movement And Activity Of Marine Mammals Near The Activity Site(S) Including Migration And Other Habitat Uses, Such As Feeding… 58
14. Suggested Means Of Learning Of, Encouraging, And Coordinating Research Opportunities, Plans, And Activities Relating To Reducing Such Incidental Taking And Evaluating Its Effects..... 63
15. List of Preparers..... 64
16. References..... 65

TABLES

Table 1. Summary of the marine mammal species or the specific stock found within the San Francisco Bay area. 21

Table 2. Summary of the seasonal occurrence and distribution, of marine mammals with potential to occur near Pier E3. 30

Table 3. Charge weights per delay, number of delays, & added level to accumulate number of blasts ... 38

Table 4. Estimated distances to NMFS marine mammal impulse criteria. 42

Table 5. Estimated in-water density of marine mammals. 45

Table 6. Summary of the estimated exposures of marine mammals. 48

FIGURES

Figure 1. SFOBB East Span Seismic Safety Project Map 1

Figure 2. Schematic of the Existing East Span 2

Figure 3. Sections of the SFOBB Original East Span 3

Figure 4. Schematic of the east span of the SFOBB showing the cantilever truss span 4

Figure 5. Draft plan sheet of Pier E3 caisson showing elevations, dimensions, and limits of removal 7

Figure 6. View of Pier E3 facing northwest showing the wood structure and concrete apron 8

Figure 7. Schematic of Pier E3 elevation view, excavator is shown atop the pier cap 9

Figure 8. Pier E3 schematic. Elevation view depicts an excavator equipped with a hoe ram 10

Figure 9. Pier E3 Schematic. Elevation view of the pier cap material over the inner cells of the pier 11

Figure 10. Pier E3 schematic. Elevation view depicts an excavator dismantling the outer portions of the pier cap after concrete pedestals have been removed. 12

Figure 11. Pier E3 schematic. Elevation and plan view of Pier E3 after removal of pier cap and fender system 13

Figure 12. Pier E3 schematic. Plan view shows pier cap with fenders removed and an access platform installed 14

Figure 13. Pier E3 drilling template schematic. Plan view shows installed platforms over all inner cells to support drilling equipment 15

Figure 14. Figure shows BAS Layout. 16

Figure 15. Schematic showing air compressors on barges 17

Figure 16. Map of the East Spans of the new and original San Francisco-Oakland Bay Bridge and surrounding area 19

Figure 17. Observed and predicted peak pressure values for 39 underwater concrete blasts. 32

Figure 18. Noise criteria and thresholds for underwater blasting 34

Figure 19. Blast wave forms vs. time relative the same arrival time 37

Figure 20. Total pressure versus time history for combined direct and surface relief wave 1,000 feet from the blast with source and receptor 30 feet deep 38

Figure 21. Filters for marine mammal groups 40

Figure 22. The effect of bubble screens of different parameters on underwater unconfined blast..... 41

Figure 23. MMEZ Zone 61

1. A Detailed Description of the Specific Activity or Class of Activities That Can Be Expected To Result In Incidental Taking of Marine Mammals.

Project Overview

The California Department of Transportation (Department), as part of the San Francisco-Oakland Bay Bridge East Span Seismic Safety Project (SFOBB Project), is in the process of dismantling the original east span of the SFOBB. As part of the SFOBB Project, the Department has replaced the east span of the SFOBB with a new bridge immediately to the north of the original east span (Figure 1). Also, as part of the dismantling phase of the SFOBB Project, the Department is proposing a demonstration project to remove Pier E3 via highly controlled charges (Demonstration Project). Controlled implosion is proposed as an alternate method to the original permitted mechanical methods for dismantling Pier E3, as it is expected to result in fewer in-water work days, have fewer effects on aquatic resources of the Bay, and require a shorter time frame for completion. The Department is requesting regulatory authorization for the incidental harassment of marine mammals during the use of highly controlled charges to dismantle the Pier E3 marine foundation.

Figure 1. SFOBB East Span Seismic Safety Project Map

The SFOBB Project is located in San Francisco Bay (Bay), between Yerba Buena Island (YBI) and the City of Oakland. The western limit of the SFOBB Project is the east portal of the YBI tunnel located in the City of San Francisco. The eastern limit of the Project is located approximately 1,312 feet (400 meters) west of the Bay Bridge toll plaza on a spit of land referred to as the Oakland Touchdown (OTD) area in the City of Oakland.

Construction of the original east span connecting YBI and the Oakland shoreline was completed in 1936. The original east span was a double-deck structure 12,127 feet (3,696 meters) in length and approximately 58 feet (18 meters) wide, carrying five traffic lanes in both east-and westbound directions. The original east span is supported by 22 in-water bridge piers (Piers E2 through E22), as well as land-based bridge piers

and bents on both YBI and Oakland. As shown in Figure 2 below, the original east span is divided into three major sections.

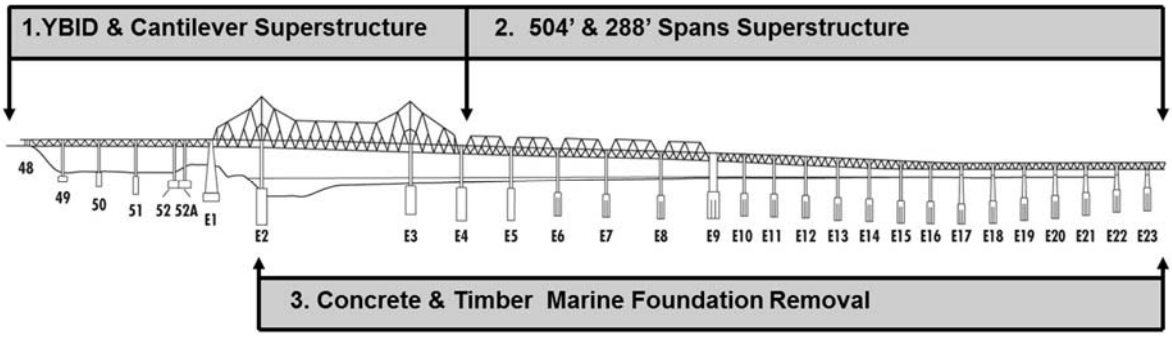

Figure 2. Schematic of the Existing East Span

<u>Three Major Sections of the Original East Span</u>

- Cantilever Superstructure and YBI Detour – The Cantilever section is comprised of three major components: (1) a cantilever anchor arm that is 508 feet (154.8 meters) long, (2) a cantilever section that is 512 feet (156 meters) long, and (3) a 1,400 foot (426.7 meter) long main span over the navigation channel consisting of a suspended segment which is supported on either side by anchor arms. The superstructure of this segment includes the trusses, road deck and steel support towers.

  YBI Detour – To complete construction of the new SFOBB east span and tie into the YBI tunnel, a portion of the original east span between Pier E1 and the YBI tunnel was dismantled in 2009 and replaced with the YBI Detour. The YBI Detour consists of a double-decked bypass structure that connects into the original east span at Pier E1 on the east side of YBI.

- 504' and 288' (504/288) Spans Superstructure – The 504/288 segment of the bridge is comprised of five 504-foot (153.6 meter) long steel truss spans and fourteen 288-foot (87.8 meter) long steel truss spans. The vertical clearance beneath the 504' spans is approximately 165 feet (50 meters) above mean high water levels, while the vertical clearance beneath the 288' spans gradually decrease from approximately 165 feet (50 meters) to approximately 10 feet (3 meters) as the structure descends towards the Oakland shoreline. The superstructure of this segment includes the trusses, road deck and steel and/or concrete support towers.

- Marine Foundations - The in-water or marine foundations vary in type. Piers E2 through E5 consist of concrete caissons founded on deep bedrock. Piers E6 through E22 consist of lightly reinforced concrete foundations that are supported by timber piles.

Dismantling of the SFOBB original east span began in late 2013. The dismantling of the original east span has been divided into multiple contracts corresponding to the different sections of the original east span (Figure 3). These contracts include:

- Yerba Buena Island Transition Structure No. 2 (YBITS 2) Contract
- 504/288 Contract
- Marine Foundation Contract

The first of the above mentioned contracts, the YBITS 2 dismantling contract, started in late 2013 and involves the dismantling of the YBI Detour structure and Cantilever Span. The second contract, the 504/288 dismantling contract, is anticipated to commence work in mid 2015. Lastly, the marine foundation contract is currently in the design phase. Construction work is anticipated to begin in mid 2015. Pier E3 has been selected for demonstrating the effective use of controlled charges in water to remove the marine foundations because it is the first marine foundation available for dismantling.

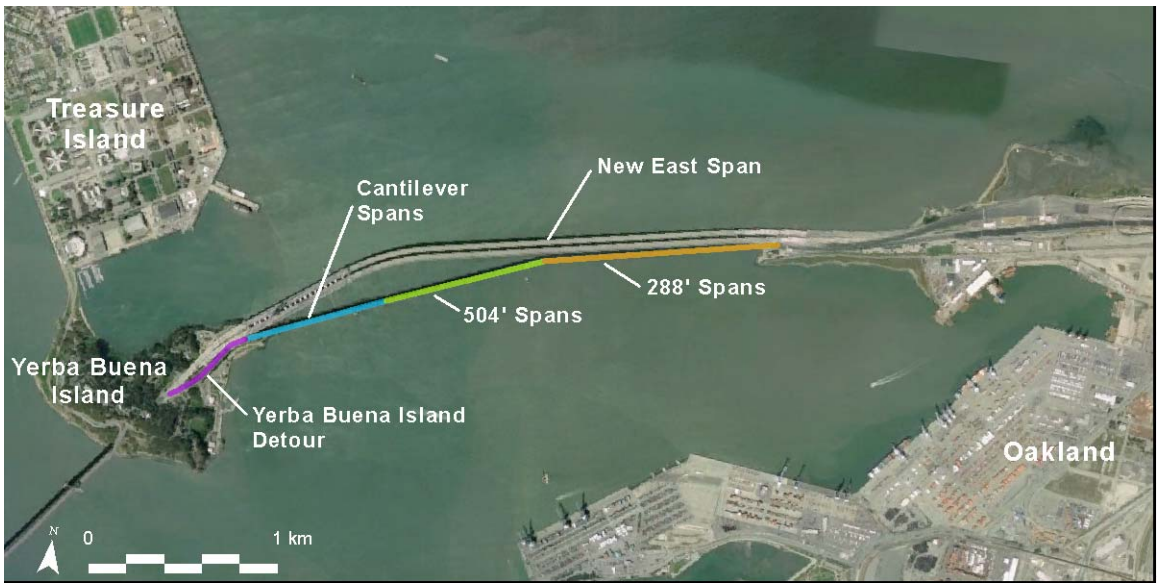

Figure 3. Sections of the SFOBB Original East Span

The original regulatory agency authorizations for the SFOBB Project covered the dismantling of the original east span via mechanical methods. In 2012, the Department amended the SFOBB Project's existing permits and received authorization to build temporary trestles and falsework to facilitate the dismantling of the original east span. These approvals did not cover the use of controlled implosion. For this reason, the Department is seeking authorization to incidentally harass marine mammals during the use of controlled charges to dismantle the Pier E3 marine foundation.

Updates to Project Description

To address potential impacts to environmental resources during bridge construction and dismantling, the Department and Federal Highway Administration (FHWA) prepared

the SFOBB Project Final Environmental Impact Statement (FEIS), dated May 2001, pursuant to the National Environmental Policy Act (NEPA). The Department also obtained approvals from resource and regulatory agencies for all activities associated with both the construction of the new east span and the dismantling of the original east span. Mechanical dismantling methods and dismantling dredging were included in the FEIS and agency approvals. In addition, the FEIS, and certain agency approvals, contain language approving the disposal of all inert, non-toxic and non-hazardous dismantling debris of the original bridge in the hollow pier footings. To remove the marine foundations in an expedient manner and with less environmental impact, the Department is proposing to update the original project description to include the dismantling methods via the use of controlled charges to remove the Pier E3 marine foundation. An updated description of the Pier E3 marine foundation and the project activities associated for removal by controlled implosion are outlined below.

Pier E3 Site Location and Description

Pier E3 is located on the original east span of the SFOBB west of the OTD area and 1,535 feet (468 meters) east of YBI near the coordinates 37048’56.75”N 122021’14.75”W, in San Francisco County (Figure 4). Pier E3 flanks the east side of the approximately 50-foot (15 meters) deep shipping channel of the SFOBB original east span.

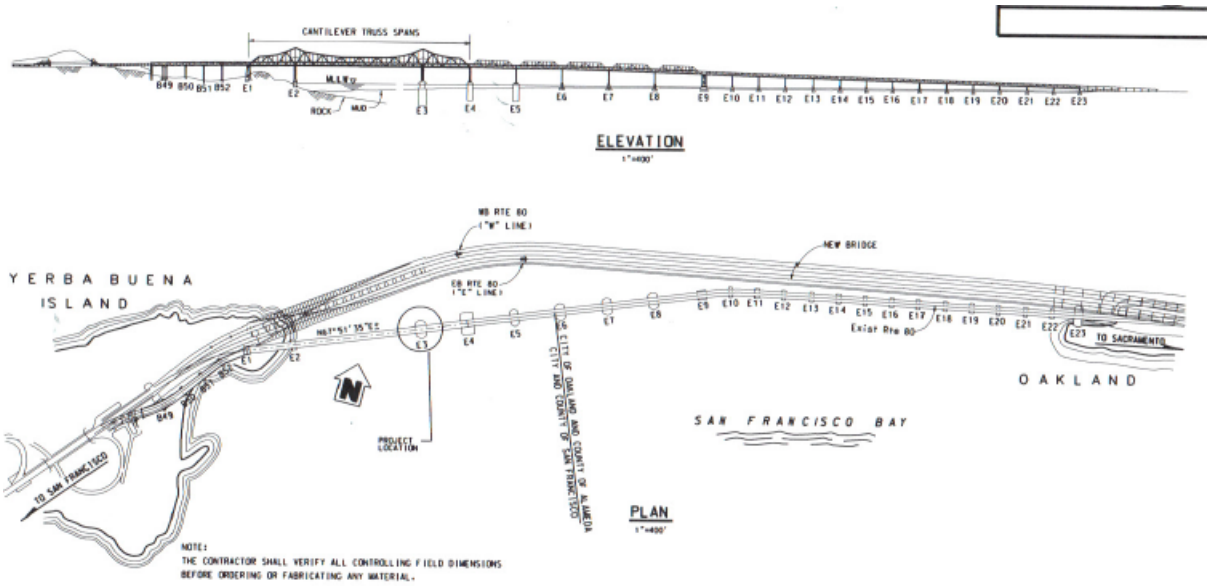

Figure 4. Schematic of the east span of the SFOBB showing the cantilever truss span and the location of Pier E3 (circled) relative to other piers on the bridge.

The Pier E3 caisson is a cellular concrete structure approximately 268 feet (82 meters) tall containing 28 total chambers. Of these, there are 24 rectangular chambers and 4 irregular shaped chambers. Fourteen of the chambers occur only below an elevation of approximately -51 feet (referenced to the 1929 National Geodetic Vertical Datum [NGVD 29]). These lower chambers occur in two separate rows of seven chambers on

each length side of the structure. The four irregular shaped chambers occur at the terminal ends of these chamber rows. Fourteen of the chambers run lengthwise in two adjacent rows of seven through the middle of the structure and extend above the mudline to support the pier cap and concrete pedestals. The structure has 12 angled buttress walls that are approximately 51 feet (15.5 m) tall. Six walls occur on each of the two lengthwise faces of the upper portion of the pier between -51 feet and 0 feet and are completely submerged at most times. All are perpendicular to the structure. The hypotenuse side of each buttress wall runs at an angle from the outer top of the lower walls terminating at the face of the structure (Figure 5). Weep holes in the foundation located at an approximate elevation of -5 feet have allowed these chambers to fill with water. The water line inside the caisson varies with the tide, but +1.5 feet was the most common elevation measured in a recent Department sampling study of the caisson cell water. Its cutting edge (deepest part of the caisson) is at -231 feet (Figure 5). About 175 feet (53 meters) of the structure's height is buried in bay mud. The caisson was originally constructed on land and then towed to its current location before being sunk into place. The caisson does not reach bedrock.

Top dimensions of the pier cap are 80 feet (24 meters) by 167 feet (50.9 meters), not including the fender apron (Figure 5). Exterior walls along the perimeter of the caisson are 4 feet (1.2 meters) wide, while the interior walls comprising the rectangular chambers are 3 feet (1 meter) in width. The mudline (e.g., the bottom of the bay floor) at Pier E3 ranges in elevation from -43 to -51 feet. The pier cap, fender system and upper most portions extend above the water line to support the steel superstructure of the cantilever section and are visible from the Bay (Figure 6).

Pier E3 Demonstration Project Overview

The Department proposes removal of Pier E3 by use of controlled charges to implode the pier into its open cellular chambers below mudline. A Blast Attenuation System (BAS) will be used to minimize impacts to biological resources in the Bay. Given the complexity of removing the deep water caissons, the Department is proposing the Demonstration Project to evaluate in-water controlled implosion techniques for the removal of marine foundations. The Department's goal is to achieve a safe and efficient method for removing submerged foundations while avoiding and minimizing impacts to the Bay and natural communities and species within the project area.

The Demonstration Project expects to reduce environmental impacts as compared to currently permitted conventional dismantling methods which would employ large cofferdams with extensive amounts of associated pile driving and dewatering. The use of controlled charges is expected to greatly reduce in-water work periods and shorten the overall duration of marine foundation removal.

Dismantling of Pier E3

Dismantling of Pier E3 will take place in 4 phases:

- Dismantling of pier cap and fender system

- Drilling of bore holes into caisson and buttress walls and installing the BAS
- Installing charges, activating the BAS and imploding the pier
- Management and removal of remaining dismantling debris

Dismantling of Pier E3 would begin in June of 2015, following the removal of the SFOBB cantilever truss section (Figures 3 and 6) and steel support tower on the original east span that are part of the YBITS2 dismantling contract. The basic steps would involve removing the timber and steel-supported fender system that surrounds Pier E3, dismantling of the concrete pier cap by mechanical means to an elevation of +9 feet and drilling vertical boreholes to load charges for the controlled implosion. Charges will be loaded into the drilled boreholes as defined in the Blast Plan (Appendix A). Controlled implosion will be accomplished using hundreds of small charges with delays between individual charges. The entire detonation sequence of controlled charges will last approximately 4 to 6 seconds and will remove the pier to, or below, the current surrounding scour elevation of -51 feet. To minimize impacts to aquatic biological resources in the Bay, a BAS will be installed around the base of the pier. The BAS is specifically designed to minimize noise and pressure impacts generated by the controlled implosion. Installation of the BAS will be concurrent with the borehole drilling process. To help minimize impacts to biological resources, the controlled implosion event will be conducted at a slack tide in November 2015. Following the completion of the dismantling activities, any concrete debris remaining above the scour line will be removed by the following process:

- Remove debris to the current scour line elevation of -51 feet and raise it to the surface to be processed.
- Rebar will be removed to minimize bridging of open caisson cells.
- Processed debris will then be placed into the open voids of the caisson for disposal.

The entire Demonstration Project is expected to last approximately seven months. The Demonstration Project methods above are described in greater detail below, including examples of anticipated equipment, schedule, and other specifics.

Dismantling of Pier E3 Cap and Fender System

Dismantling of the Pier E3 cap is anticipated to start in June 2015. Support barges will be used to move hydraulic excavators (equipped with hoe rams and shearing attachments and other equipment needed for dismantling), cutting lances and torches to Pier E3. Support barges will be anchored and remain onsite for the duration of the Demonstration Project. The excavators and other equipment will be lifted onto the top of Pier E3 with a barge-mounted crane. Pier E3 mechanical dismantling process will remove the concrete pedestals and pier cap to expose the inner cells (Figure 7). A debris catchment system will be used to contain any concrete debris from discharging into the Bay. The concrete rubble from the mechanical dismantling will be placed into exposed cells of the caisson for disposal.

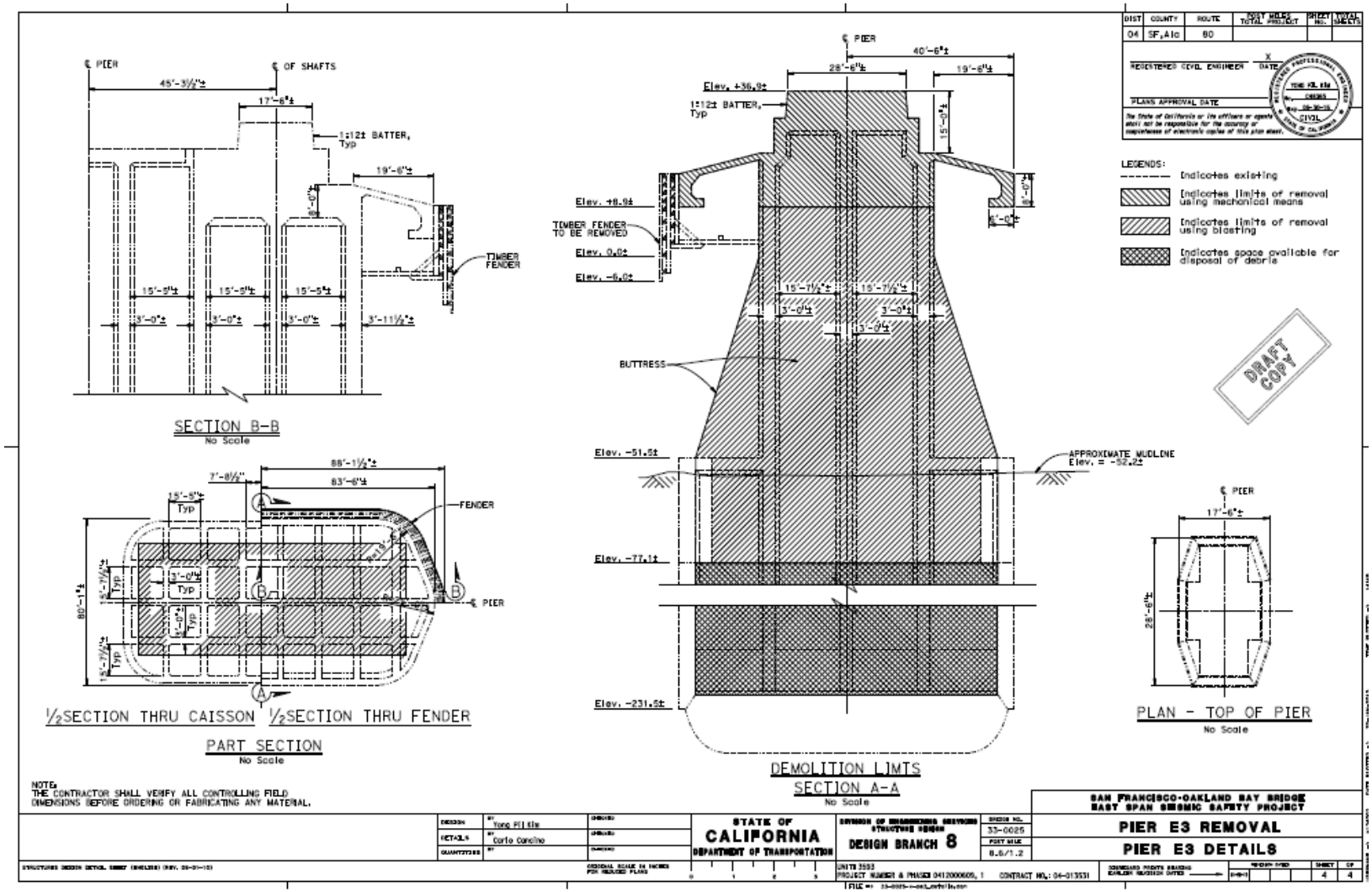

Figure 5. Draft plan sheet of Pier E3 caisson showing elevations, dimensions, and limits of removal.

Figure 6. View of Pier E3 facing northwest showing the wood structure and concrete apron of the fender system. The pier cap including the concrete pedestals are visible below the netted tower legs.

All debris is expected to fall to the base of the caisson, well below mudline. This disposal method is congruous with the SFOBB Project FEIS, which states that the Department may "use the hollow interiors of the columns remaining below the mudline as receptacles for pieces of concrete. As the upper portion of the column is dismantled, pieces of concrete could fall into the hollow interiors below the mudline." Placement of concrete rubble may displace water within the cells. The water inside the caisson cells has been analyzed and presents manageable concerns. To appropriately manage water quality issues created by any displacement of the caisson cell water, the Department will monitor during this disposal activity while using appropriate minimization measures.

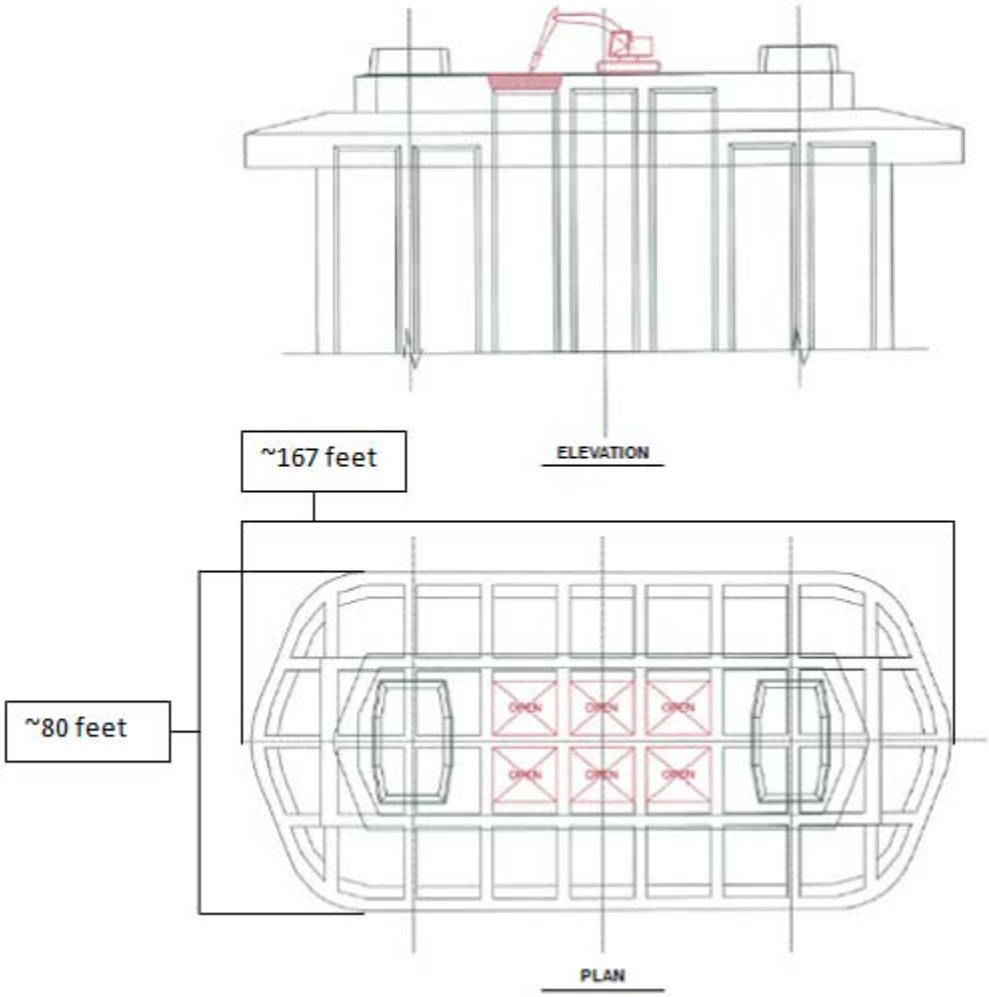

Figure 7. Schematic of Pier E3 elevation view, excavator is shown atop the pier cap removing the top slab of concrete to expose the inner cells of the pier. Exposed inner-cells are depicted in the plan view.

Support platforms will be installed to provide a working surface for the hoe rams to dismantle the upper portion of Pier E3 (Figures 8, 9 & 10). Concrete rubble from concrete pedestal dismantling will be disposed of inside the exposed inner cells of the pier.

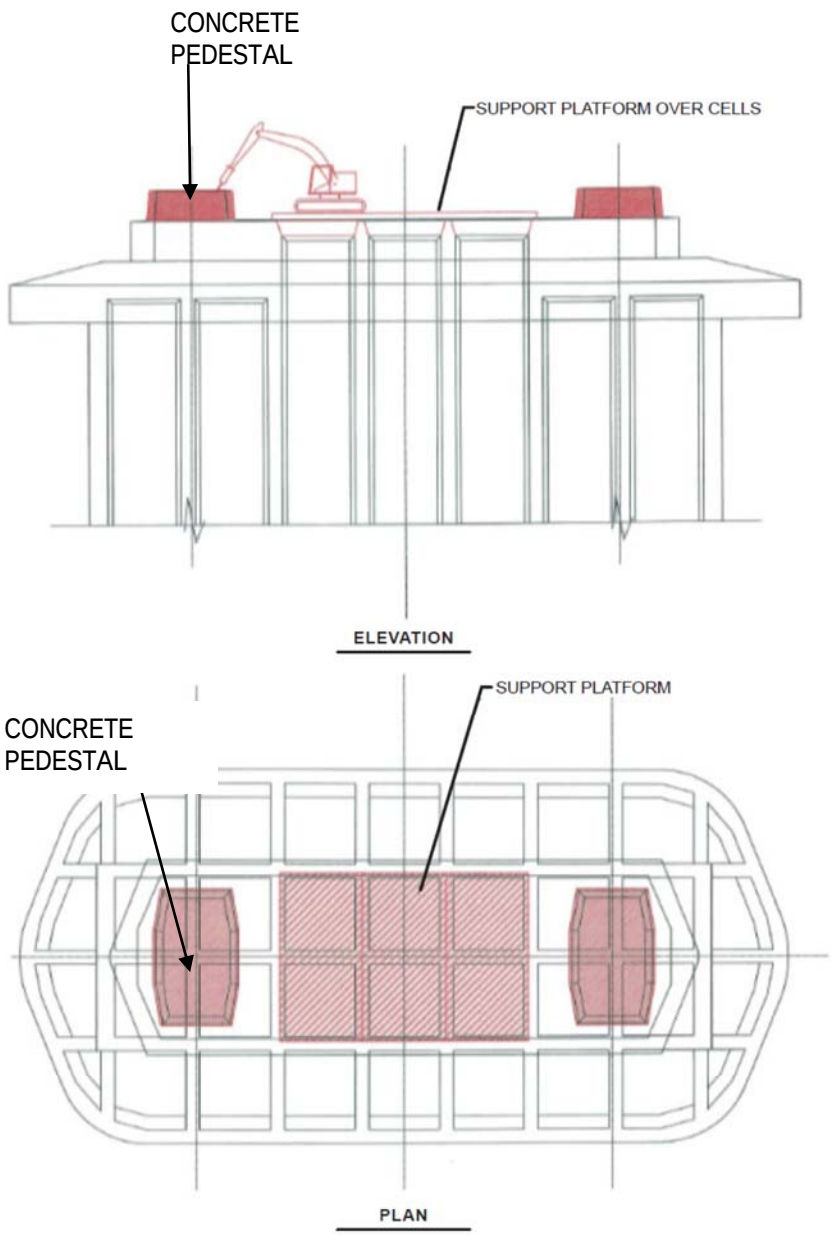

Figure 8. Pier E3 schematic. Elevation view depicts an excavator equipped with a hoe ram is shown dismantling a concrete pedestal. Plan view shows installed support platform over open cells to support construction equipment used for dismantling.

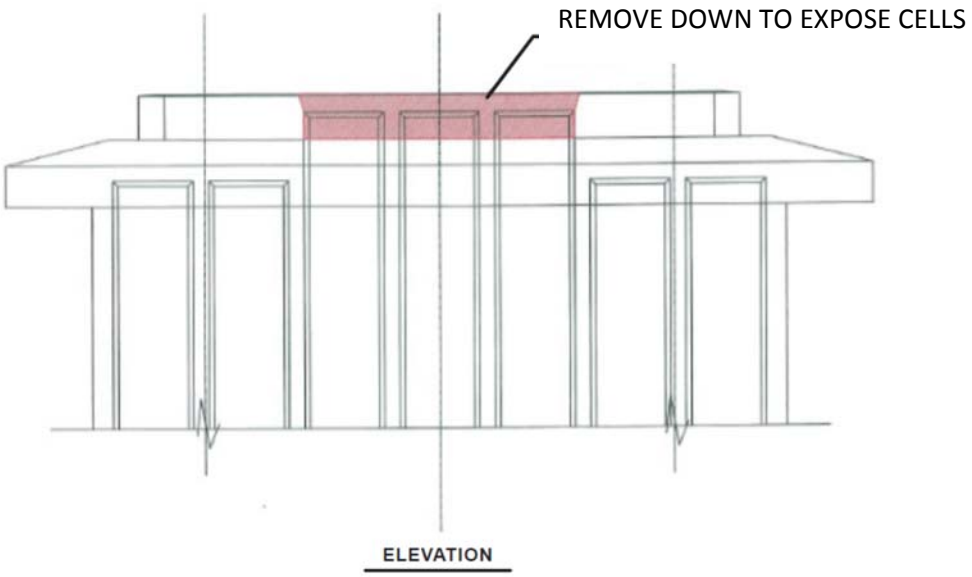

Figure 9. Pier E3 Schematic. Elevation view of the pier cap material over the inner cells of the pier, and the walls that are to be removed. An access platform is to be placed over them to support dismantling equipment.

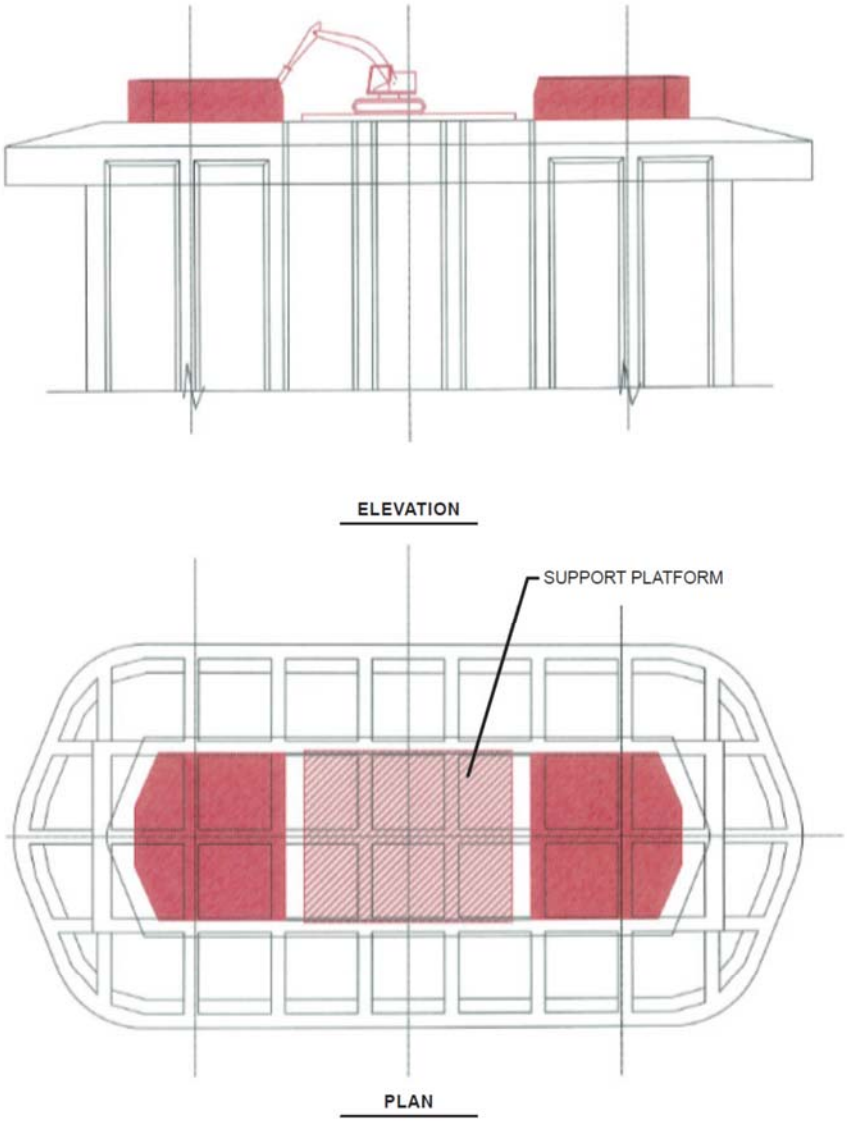

Figure 10. Pier E3 schematic. Elevation view depicts an excavator dismantling the outer portions of the pier cap after concrete pedestals have been removed**.** Plan view shows an installed platform over open inner cells to support the equipment used for dismantling.

The fender system will be removed including timber, metal framing and concrete apron. All metal and timber will be disposed of offsite. Falling concrete debris will be managed and contained. Concrete rubble from the apron will be disposed of inside the open cells of the pier (Figure 11).

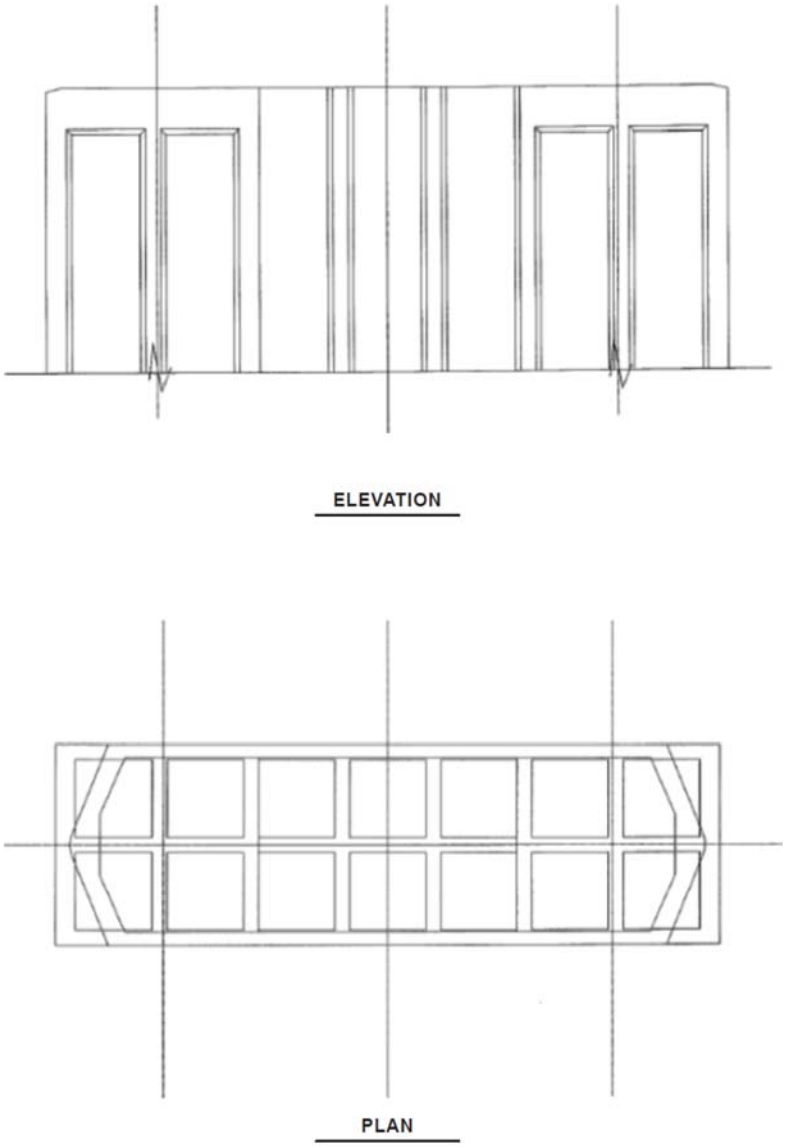

Figure 11. Pier E3 schematic. Elevation and plan view of Pier E3 after removal of pier cap and fender system including timber, steel frame, and concrete apron.

Platforms will be installed and relocated to allow excavators to access the top of the pier to dismantle the remaining concrete to the final mechanical dismantling elevation limit (Figure 12).

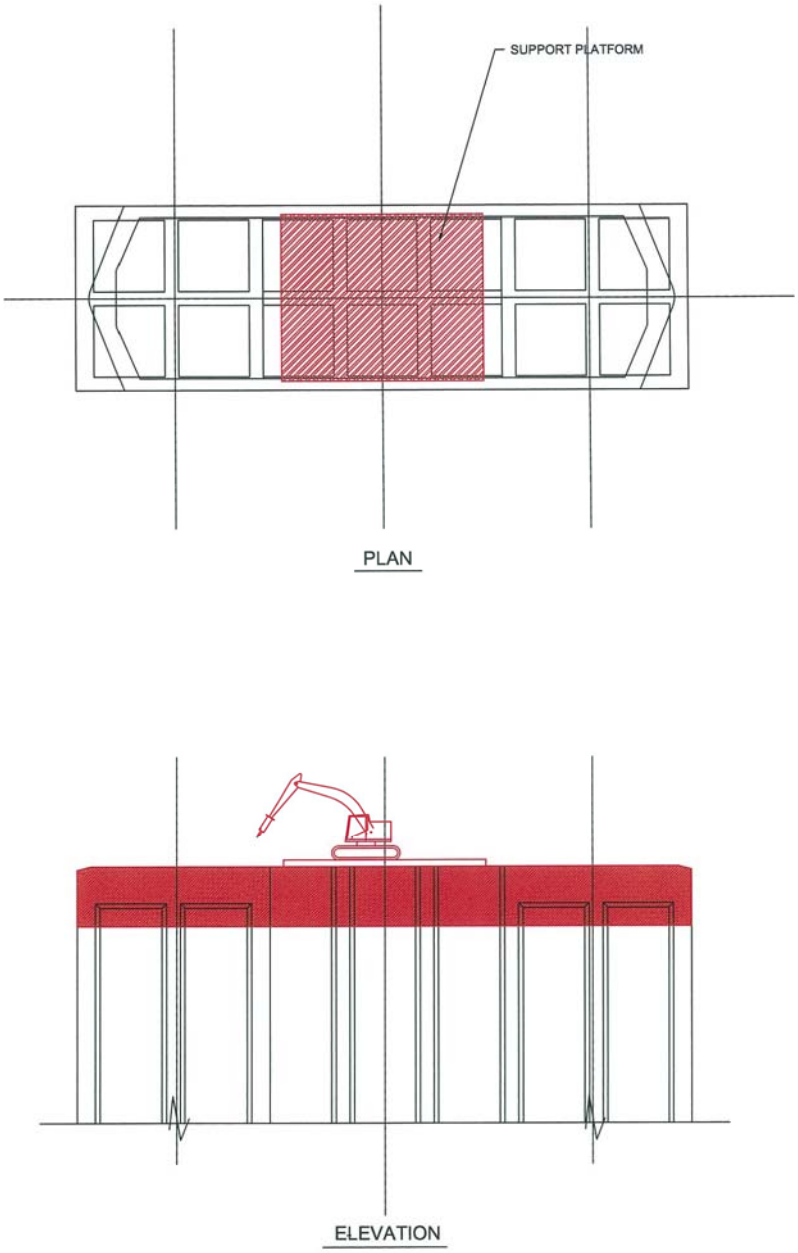

Figure 12. Pier E3 schematic. Plan view shows pier cap with fenders removed and an access platform installed. Elevation view shows installed platform supporting equipment used during dismantling and an excavator removing concrete to final mechanical dismantling elevation limit.

Drill Boreholes, Install BAS, and Dismantle Remaining Portion of Pier E3 by Controlled Implosion

Once the pier has been dismantled to the mechanical dismantling elevation, access platforms will be installed to support the drilling equipment while exposing the top of the interior cells and outside walls (Figure 13). Borehole drill locations will be marked on the inner cell walls and exterior walls of the pier. An overhanging template system will be installed to guide the drill below the waterline. Divers will be required to cut notches to guide the drilling of underwater boreholes. A concrete

drill rig will be used to drill holes into the interior and exterior cell walls consistent with the Blast Plan (Appendix A).

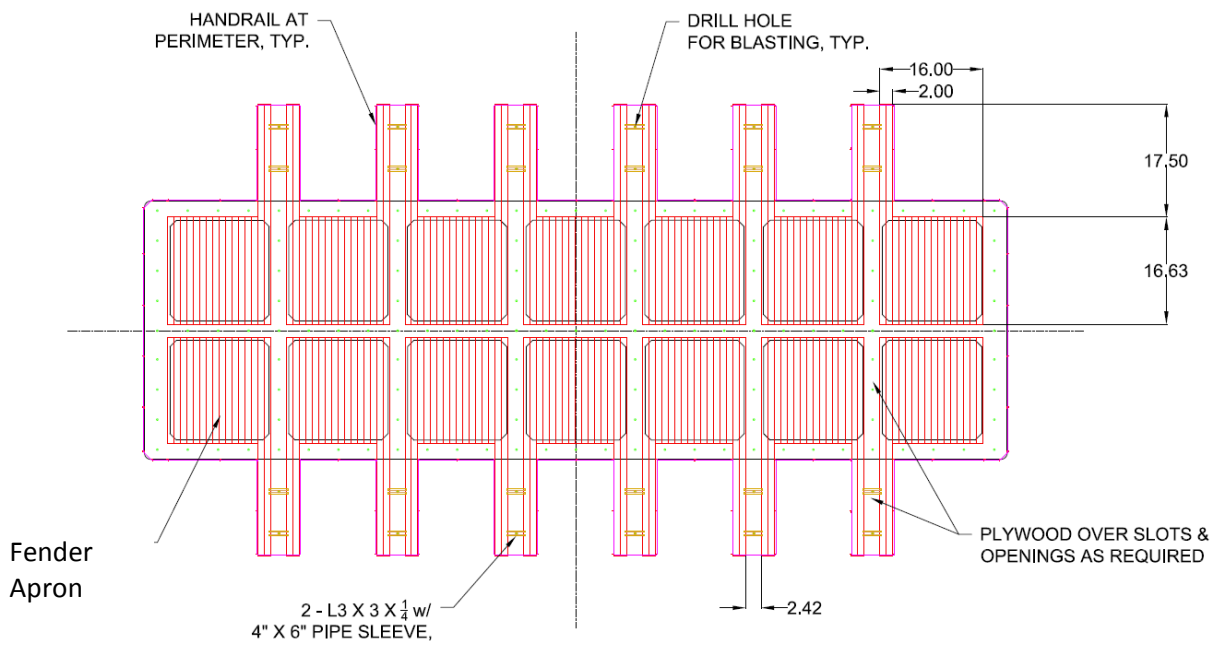

Figure 13. Pier E3 drilling template schematic. Plan view shows installed platforms over all inner cells to support drilling equipment and installed overhang template system to facilitate drilling activities below the waterline.

<u>Blast Attenuation System Installation and Deployment</u>

The BAS will be installed during drilling operations. The BAS to be used at Pier E3 is a modular system of pipe manifold frames that will be fed by 14-1600-cfm air compressors to create a curtain of air bubbles around the entire pier during the controlled implosion. Proposed BAS design details and specifications can be viewed in an appendix to this document (Appendix B). Each BAS frame will be lowered to the bottom of the Bay by a barge mounted crane and positioned into place (Figure 14). Divers will be used to assist frame placement and to connect air hoses to the frames. Based on location around the pier, the BAS frame elements will be situated from approximately 25 feet (7.6 meters) to 40 feet (12 meters) from the outside edge of Pier E3. The frames will be situated to contiguously surround the pier; frame ends will overlap to ensure no break in the BAS when operational. Each frame will be weighted to negative buoyancy for activation. Compressors will provide enough pressure to achieve a minimal air volume fraction of 3-4%, consistent with the successful use of BAS systems in past controlled blasting activities. System performance is anticipated to provide approximately 80% attenuation, or better, based on past experience with similar systems during controlled blasting.

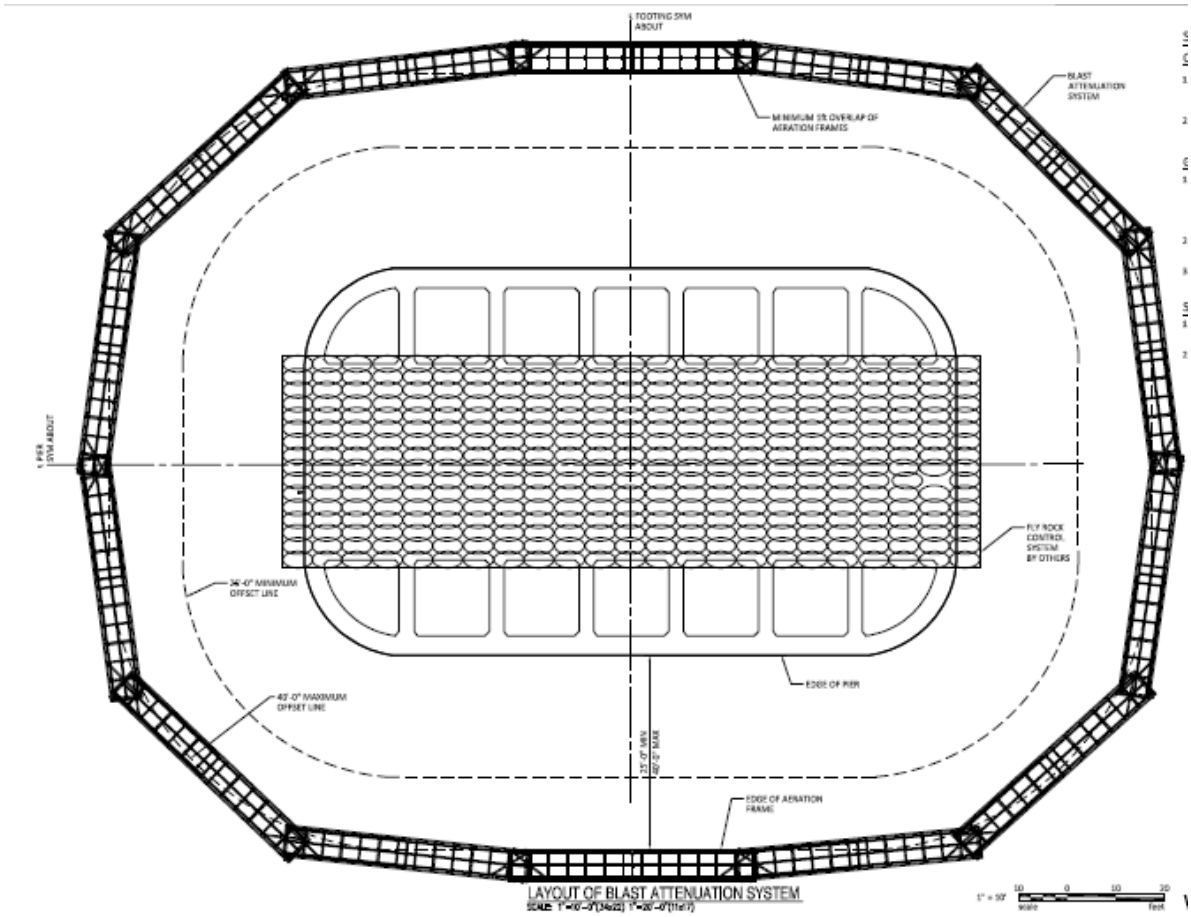

Figure 14. Figure shows BAS Layout.

Each BAS frame will be fed by an individual compressor mounted on a barge. This will require 14 compressors on approximately 14 flexi-float barges situated around the pier (Figure 15). Each barge will be temporarily anchored to maintain their position around the pier. Compressors will be turned on and each section of the BAS will be tested for uniform air flow prior to the controlled implosion. Once the controlled implosion event has been completed, the contractor will demobilize the BAS and all associated equipment.

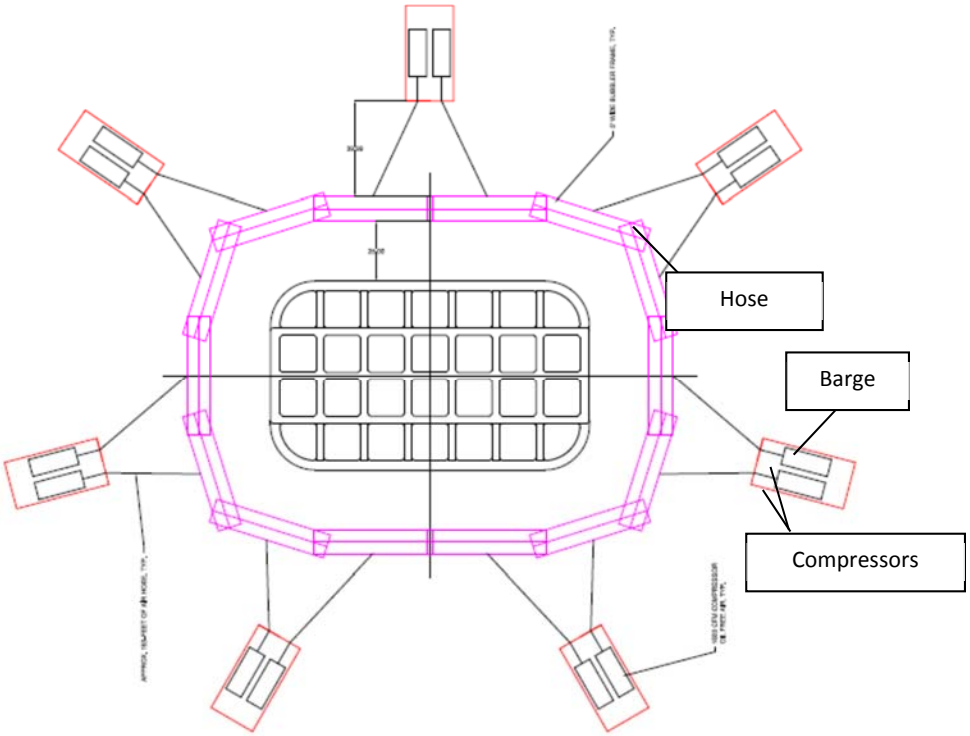

Figure 15. Schematic showing air compressors on barges with hose connections to each BAS frame. Please note this layout does not show all 14 barges that would be used to support the compressors.

<u>Controlled Implosion Dismantling of Remaining Pier</u>

The controlled implosion event is scheduled to take place in November of 2015. Prior to the event, the bore holes in Pier E3 will be loaded with charges, as described in the Blast Plan (Appendix A). Individual cartridge charges, versus pump-able liquid blasting agents, have been chosen to provide greater accuracy in estimating the individual and total charge weights. Charges will be transported by boat to Pier E3. Security will be required for transporting, handling and processing of the charges.

Boreholes vary in diameter and depth and have been optimized for charge efficiency. Individual and total charge weight loads are provided in the Blast Plan. Charges are arranged in different levels (decks) separated in the boreholes by stemming. Stemming is the insertion of inert materials, like sand or gravel, to insulate and retain charges in an enclosed space. Stemming allows for more efficient transfer of energy into the structural concrete for fracture, and further reduces the release of potential energy into the adjacent water column. The total number of charges and delays, and total shot time are provided in the Blast Plan.

Public Safety measures will be implemented during the controlled implosion event. Safety zones will be established and enforced in conjunction with the United States Coast Guard (USCG) to exclude commercial and recreational marine vessels. Safety procedures will include a rolling traffic stop in both directions on the new east span of the SFOBB in advance of implosion. After the BAS is determined to have established an air curtain surrounding the pier, the controlled

implosion sequence will be initiated. The Department will have a Traffic Management Plan in place during the controlled implosion event.

Debris Removal and Site Restoration

Following the controlled implosion event and confirmation that the area is safe to work in, construction crews will begin to remove all associated equipment including barges, compressors, BAS and blast mats.

Rubble resulting from the controlled implosion dismantling will consist of concrete and rebar. Most rubble is expected to fall within the caisson cells below mudline. A minimal amount of rubble is expected to either mound on top of the caisson, or fall onto the bay floor next to the caisson. Rubble that does not fall into caisson cells will need to be managed. Management of extraneous rubble will be done by a barge-mounted crane with a clamming bucket. Rubble bridging over the open cells of the caisson, or on the bay floor will be removed and placed on support barges where rebar and concrete will be sorted. Processed concrete debris will then be lowered over the caisson voids and released to sink into the open voids. Buckets used during this debris management phase will be equipped with a GPS unit to accurately guide the location of the bucket in the water. The clamming, sorting, and in-water operation is estimated to take several weeks.

2. The Date(s) and Duration of Such Activity and the Specific Geographical Region Where It Will Occur.

The authorization will be in effect from October 1, 2015 to September 30, 2016. All permitted activities will occur within the Bay in the area around the east span of the SFOBB between YBI and Oakland (Figure 16). Permitted activities may occur at any time of the year depending on the Department and contractor schedules, and Biological Opinion regulations for endangered/threatened fish species. The demolition of Pier E3 through controlled implosion is currently planned to occur during November 2015.

Figure 16. Map of the East Spans of the new and original San Francisco-Oakland Bay Bridge and surrounding area. Included are the locations of the harbor seal haul-out site on Yerba Buena Island and Pier E3 for proposed implosion.

3. The Species and Numbers of Marine Mammals Likely To Be Found Within the Activity Area.

Six species of marine mammals regularly inhabit or seasonally enter San Francisco Bay (Table 1). The two most common species observed are the Pacific Harbor seal (*Phoca vitulina richardii*) and the California sea lion (*Zalophus californianus*). Northern elephant seals (*Mirounga angustirostris*) seasonally enter the Bay (spring and fall) while harbor porpoises (*Phocoena phocoena*) may enter the western side of the Bay throughout the year but rarely occur near the east span of the SFOBB. Gray whales (*Eschrichtius robustus*) may enter the Bay during the northward migration in the spring and bottlenose dolphins (*Tursiops truncatus*) may enter the western side of the Bay and are unlikely to occur near the original SFOBB during November. None of these species are listed as Endangered or Threatened under the Endangered Species Act (ESA), or as depleted or a strategic stock under the Marine Mammal Protection Act (MMPA). In addition to the six common or regularly occurring species, eight species of marine mammals are considered extralimital (rare sightings or strandings) and are unlikely to occur within the Bay (Table 1).

Information on the seasonal occurrence and estimated densities of harbor seals, sea lions, and harbor porpoises in the area of the east span of the SFOBB were estimated from marine mammal monitoring conducted from 2000-2014 during pile driving for permanent and temporary piles, demolition of temporary tower foundations, and during blasting on YBI for Towers W2E and W2W. During 210 days of monitoring (including 15 days of baseline monitoring in 2003), 657 harbor seals, 69 California sea lions, and three harbor porpoises were observed within the area of the east span of the SFOBB (Department 2001, 2004, 2009, 2013b, 2013c, and 2014). During this time, only two individuals have shown responses to pile driving noise. In 2000, a sea lion was swimming slowly at the surface approximately 3,281 feet (1,000 meters) west of a pile driving site. This individual then rapidly swam north at the start of pile driving (Thorson and Wagner 2001). In 2004, a harbor seal swam toward the pile driving barge during pile driving for the eastbound Skyway and at approximately 180 feet (55 meters) from the piles abruptly turned around and dove (Department 2004). Otherwise, most seals or sea lions were observed at least 328 feet (100 meters) beyond pile driving. If an animal transited through the area, it would typically look toward the piles but not change swimming speed or direction (Thorson and Wagner 2001; Department 2004).

During past monitoring, the number of harbor seals observed increased as construction or demolition activities moved closer to YBI. The Coast Guard Cove and Clipper Cove (between YBI and Treasure Island), and a small trench area 984 feet (300 meters) southeast of YBI, are frequently used by harbor seals to forage. YBI also is the site of one of the main harbor seal haul-outs within the San Francisco Bay (Department 2004).

Table 1. Summary of the marine mammal species or the specific stock found within the San Francisco Bay area, status under the Endangered Species Act (ESA) and the Marine Mammal Protection Act (MMPA), current population, estimate and population trend (information is from NMFS Stock Assessment Reports; Carretta et al. 2014 and Allen and Angliss 2014).

Species	Stock	Status (ESA and MMPA)	Population	Population Trend
Species With Regular or Seasonally Occurrence In the San Francisco Bay				
Phocids				
Pacific Harbor Seal *Phoca vitulina richardii*	California	Not Listed	30,196 (CV=0.157)	Decreasing
Northern Elephant Seal *Mirounga angustirostris*	California Breeding	Not Listed	124,000-179,000	Increasing
Otariids				
California Sea Lion *Zalophus californianus*	United States	Not Listed	296,750	Increasing
Odontocetes				
Harbor Porpoise *Phocoena phocoena*	San Francisco-Russian River	Not Listed	9,886 (CV=0.51)	Stable
Species That Are Extralimital To San Francisco Bay				
Sea Otter *Enhydra lutris*	Southern (California population)	Threatened (ESA) Strategic (MMPA) Depleted (MMPA)	2,826	Stable
Northern Fur Seal *Callorhinus ursinus*	California	Not Listed	12,844	Increasing
Steller Sea Lion *Eumetopias jubatus*	Eastern (California Haul-out Sites)	Threatened (ESA) Strategic (MMPA) Depleted (MMPA)	2,781	Increasing (Stable in California)
Common Bottlenose Dolphin *Tursiops truncatus*	California Coastal	Not Listed	323 (CV=0.13)	Stable
Short-Beaked Common Dolphin *Delphinus delphis delphis*	California/Oregon/ Washington	Not Listed	411,211 (CV= 0.21)	Increasing
Fin Whale *Balaenoptera physalus physalus*	California/Oregon/ Washington	Endangered (ESA) Strategic (MMPA) Depleted (MMPA)	3,051 (CV=0.18)	Stable

Species	Stock	Status (ESA and MMPA)	Population	Population Trend
Gray Whale *Eschrichtius robustus*	Eastern North Pacific	Not Listed	19,126 (CV=0.71)	Increasing
Humpback Whale *Megaptera novaeangliae*	California/Oregon/ Washington	Endangered (ESA) Strategic (MMPA) Depleted (MMPA)	1,918 (CV=0.03)	Increasing
Minke Whale *Balaenoptera acutorostrata scammoni*	California/Oregon/ Washington	Not Listed	478 (CV=1.36)	Unknown
Sperm Whale *Physeter macrocephalus*	California/Oregon/ Washington	Endangered (ESA) Strategic (MMPA) Depleted (MMPA)	971 (CV=0.31)	Unknown

CV=Coefficients of Variation

4. A Description Of The Status, Distribution, And Seasonal Distribution (When Applicable) Of The Affected Species Or Stocks Of Marine Mammals Likely To Be Affected By Such Activities.

There are six species that are likely to be affected by the Project. The following discussion outlines their distribution and current population status. A summary of the information in this section is presented in Table 2.

4.1 Pacific Harbor Seal (California Stock)

Status: The harbor seal is protected under the MMPA, but is not listed as a strategic or depleted species under the MMPA (Carretta et al. 2013), or listed as endangered or threatened under the ESA. The California stock of harbor seals has been increasing since 1972, but at a slower rate since 1990, with a maximum count in 2004 (Lowry and Carretta 2003; Lowry et al. 2008; Carretta et al. 2012). The population size for the California stock is estimated at 30,196 seals (Lowry et al. 2008; Caretta et al. 2012).

Distribution: Harbor seals are found from Baja California to the eastern Aleutian Islands of Alaska. They primarily haul out on remote mainland and island beaches and reefs, and estuary areas. Harbor seals tend to forage locally within 53 miles (85 kilometers) of haul-out sites (Harvey and Goley 2011). Harbor seals are the most common marine mammal species observed in the Bay and also commonly seen near the east span of the SFOBB (Department 2013b, 2013c). Tagging studies have shown that most seals tagged within the Bay remain in the Bay (Harvey and Goley 2011; Manugian 2013). Foraging often occurs within the Bay as noted by observations of seals completing foraging behavior (short dives less than five minutes, moving back and forth within an area, and sometimes tearing up prey at the surface).

The molt occurs from May through June. During both the pupping and molt seasons, the number of seals and the length of time hauled out per day increases with about 60.5% of the population hauled out during this time versus less than 20% in the fall (Yochem et al. 1987; Huber et al. 2001; Harvey and Goley 2011). Mother-pup pairs spend more time on shore; therefore, the percentage of seals on shore at haul-out sites increases during the pupping season (Stewart and Yochem 1994). Peak numbers of harbor seals hauling out in Central California occurs during late May to early June, which coincides with the peak of their molt. Seals haul out more often and spend more time on shore to molt. Yochem et al. (1987) found that harbor seals at San Miguel Island only hauled out 11-19% of the time in the autumn from late October through early December.

Harbor seals tend to forage at night and haul out during the day. Harbor seals predominately haul out from 10:00 through 19:00, with a peak in the afternoon between 13:00 and 16:00 (Yochem et al. 1987; Stewart and Yochem 1994, Grigg et al. 2002; London et al. 2012). Harbor seals in the Bay typically haul out in groups ranging from a few individuals to several hundred seals. One known haul-out site is on the south side of YBI, approximately 4,593 feet (1,400 meters) from Pier E3. The YBI haul-out site had a range of 0-109 harbor seals hauled out during November with the highest numbers hauled out during afternoon low tides (Department 2004). Pile driving for the SFOBB was not audible to the monitors just above the haul-out site and not response to pile driving was observed.

Tide level can also affect haul-out behavior by exposing and submerging preferred haul out sites. Tides likely affect the maximum number of seals hauled out, but time of day and the season have the greatest influence on haul-out behavior (Stewart and Yochem 1994; Patterson and Acevedo-Gutiérrez 2008).

SFOBB Area: During 210 days of SFOBB monitoring, 657 harbor seals were observed within the area of the east span of the SFOBB. Harbor seals comprised 90% of the marine mammals observed during monitoring for the SFOBB Project. Foraging near the SFOBB is common, particularly within the coves adjacent to the YBI U.S. Coast Guard Station and in Clipper Cove between YBI and Treasure Islands. Foraging also occurs within a shallow trench area southeast of YBI (Department 2013a, 2013b). These sites are approximately 2,297 to 4,593 feet (700 to 1,400 meters) west of Pier E3.

Reproduction and Breeding: Pupping begins in late March in central California and pups start weaning in May. All pups are weaned by mid-June. Breeding occurs between late March and early May.

Diving and Foraging: Harbor seals are generally shallow divers with about 90% of dives lasting less than seven minutes (Gjertz et al. 1991; Eguchi and Harvey 2005) with a maximum recorded dive time of 32 minutes (Eguchi and Harvey 2005).

Acoustics: Adult males produce low-frequency vocalizations underwater during the breeding season (Hanggi and Schusterman 1994; Van Parijs et al. 2003). Male harbor seals produce sounds in the frequency range of 100 to 1,000 Hz (Richardson et al. 1995). Generally, harbor seals do not vocalize while traveling or feeding; therefore, attempts to acoustically detect them prior to underwater implosions would not be useful. Harbor seals hear at frequencies from 1 to 180 kilohertz (kHz) (Møhl 1968); however, the species' hearing is most acute below 60 kHz, with peak hearing sensitivity at 32 kHz in water and 12 kHz in air (Terhune 1968; Terhune and Turnball 1995; Kastak and Schusterman 1998; Wolski et al. 2003).

4.2 California Sea Lion (United States Stock)

Status: The California sea lion is protected under the MMPA, but is not listed as a strategic or depleted species under the MMPA (Carretta et al. 2012), or listed as endangered or threatened under the ESA. The United States stock has been increasing since 1975 through 2008, with an estimated population of 296,750 sea lions (Carretta et al. 2012).

Distribution: California sea lions breed on the offshore islands of California from May through July (Heath and Perrin 2008). During the non-breeding season, adult and sub-adult males, and juveniles migrate northward along the coast to central and northern California, Oregon, Washington, and Vancouver Island (Jefferson et al. 1993). They return south the following spring (Lowry and Forney 2005; Heath and Perrin 2008). Females and some juveniles tend to remain closer to rookeries (Antonelis et al. 1990; Melin et al. 2008).

California sea lions have been observed occupying docks near Pier 39 in San Francisco, about 3.2 miles (5.2 kilometers) from Pier E3, since 1987. A reported high of 1,105 sea lions at Pier 39 occurred in 2001 (Marine Mammal Center 2002). Occurrence of sea lions here typically is lowest

in June (breeding season) and the highest in August. Approximately 85 percent of the animals that haul out at this site are males and no pupping has been observed here or at any other site in the Bay (Lander pers. com. 1999). Pier 39 is the only regularly used haul-out site around the SFOBB but sea lions do occasionally haul out on man-made structures such as bridge piers, jetties, or navigation buoys (Riedman 1990).

SFOBB Area: During monitoring for the SFOBB Project, 69 California sea lions were observed from 2000-2014. Sea lions appear to be transiting through the SFOBB area rather than feeding with the exception of a single observation. In 2004, several sea lions were observed following a school of Pacific herring that moved through the SFOBB construction area.

Reproduction and Breeding: Breeding and pupping occur from mid-to-late May until late July. After the mating season, adult males migrate northward to feeding areas as far away as the Gulf of Alaska (Lowry et al. 1992) and remain away until spring (March–May), when they migrate back to the breeding colonies. Adult females remain near the rookeries throughout the year and alternate between foraging and nursing their pups on shore until the next pupping/breeding season.

Diving and Foraging: Over one-third of the foraging dives by lactating females are 1–2 minutes in duration and 75% of dives are < 3 minutes, with the longest recorded dive of 9.9 minutes (Feldkamp et al. 1989). More recent studies of adult lactating females have reported a range of mean dive durations of 1.6 to 8.1 minutes (Melin et al. 2008). Most sea lions in the Bay are juveniles or sub-adult males, and are similar in size to adult lactating female sea lions; therefore, these dive data should approximate the diving abilities of Bay sea lions.

Acoustics: California sea lions produce two types of underwater sounds: clicks (or short-duration sound pulses) and barks (Schusterman et al. 1966; Schusterman 1969). All underwater sounds have most of their energy below 4 kHz (Schusterman et al. 1967). The range of maximal sensitivity underwater for sea lions is between 1 and 28 kHz (Schusterman et al. 1972). Functional underwater high frequency hearing limits are between 35 and 40 kHz, with peak sensitivities from 15 to 30 kHz (Schusterman et al. 1972). The California sea lion shows relatively poor hearing at frequencies below 1,000 Hz (Kastak and Schusterman 1998). The best range of sound detection is from 2 to 16 kHz (Schusterman 1974). Kastak and Schusterman (2002) determined that hearing sensitivity generally worsens with depth—hearing thresholds were lower in shallow water, except at the highest frequency tested (35 kHz), where this trend was reversed. Octave band noise levels of 65 to 70 dB above the animal's threshold produced an average TTS of 4.9 dB in the California sea lion (Kastak et al. 1999). Center frequencies were 1,000 Hz for corresponding threshold testing at 1,000 Hz and 2,000 Hz for threshold testing at 2,000 Hz; the duration of exposure was 20 minutes.

4.3 Northern Elephant Seal (California Breeding Stock)

Status: The northern elephant seal is protected under the MMPA, but is not listed as a strategic or depleted species under the MMPA (Carretta et al. 2013), or listed as endangered or threatened under the ESA. The population size for the California breeding stock is estimated at 124,000 to 179,000 seals and is increasing (Lowry et al. 2010; Carretta et al. 2012).

Distribution: Northern elephant seals are common on California coastal mainland and island sites where they pup, breed, rest and molt. The largest rookeries are on San Nicolas and San Miguel

islands in the Northern Channel Islands. Near the Bay, elephant seals breed, molt, and haul out at Año Nuevo Island, the Farallon Islands, and Point Reyes National Seashore.

Northern elephant seals haul out to give birth and breed from December through March. Pups remain onshore or in adjacent shallow water through May. Both sexes make two foraging migrations each year: one after breeding and the second after molting (Stewart 1989; Stewart and DeLong 1995). Pup mortality is high when they make the first trip to sea in May and this period correlates with the time of most strandings. Pups of the year return in the late summer and fall to haul out at rookery sites but may occasionally make brief stops in the Bay.

SFOBB Area: Generally, only juvenile elephant seals enter the Bay and do not remain long. The most recent sighting was in 2012 on the beach at Clipper Cove on Treasure Island when a healthy yearling elephant seal hauled out for approximately one day. Approximately 100 juvenile northern elephant seals strand within the Bay each year, including individual strandings at YBI and Treasure Island (less than 10 strandings per year).

Diving and Foraging: Elephant seals have the highest diving capacity of any pinniped. Elephant seal juveniles regularly dive for 10-15 minutes with a maximum reported time of 45.5 minutes (Thorson and Le Boeuf 1994; Le Boeuf et al. 1996).

Acoustics: The audiogram of the northern elephant seal indicates that the best sensitivity is between 3.2 and 45 kHz, with greatest sensitivity at 6.4 kHz and an upper frequency cutoff of approximately 55 kHz (Kastak and Schusterman 1998).

4.5 Harbor Porpoise (San Francisco-Russian River Stock)

Status: The harbor porpoise is protected under the MMPA, but is not listed as a strategic or depleted species under the MMPA (Carretta et al. 2013), or listed as endangered or threatened under the ESA. The population size for the San Francisco-Russian River stock is estimated at 9,189 porpoises (CV= 0.38) and is increasing (Carretta et al. 2012).

Distribution: This species is seldom found in waters warmer than 17°C (Read 1990) or south of Point Conception and occurs as far north as the Bering Sea (Barlow and Hanan 1995; Carretta et al. 2009; Carretta et al. 2012; Allen and Angliss 2013). The San Francisco-Russian River stock is found from Pescadero (30 km south of San Francisco Bay) north to Point Arena (99 miles [160 kilometers] north of San Francisco Bay; Carretta et al. 2012). In most areas, harbor porpoises occur in small groups consisting of just a few individuals.

SFOBB Area: Harbor porpoises are frequently seen outside of the Bay and began to re-enter the Bay in 2008. Keener et al. (2012) reports sightings of harbor porpoises from just inside the Bay northeast to Tiburon and south to the west span of the SFOBB. Harbor porpoises have only been observed on three occasions (all single animals) swimming near the east span of the SFOBB. Those observations were made during spring and summer and occurred near YBI (May to August; Department 2013c, 2014). The rare occurrence of harbor porpoises near the east span of the SFOBB makes it unlikely they will be exposed to implosion activities.

Diving and foraging: Tagged harbor porpoise individuals spend 3 to 7 percent of their time at the surface and 33 to 60 percent within 6.5 feet (two meters) of the surface (swimming behavior). Average dive depths range from 46 to 135 feet (14 to 41 meters), with a maximum known dive of 741 feet (226 meters), and average dive durations ranging from 44 to 103 seconds (Westgate et al. 1995). Harbor porpoises spend about 23% of their time at or near the surface; therefore, they are relatively easier to sight then other cetacean species (Laake et al. 1997).

Reproduction and Breeding: Calves are born in late spring (Read 1990; Read and Hohn 1995). Harbor porpoises make brief dives, generally lasting less than five minutes.

Acoustics: Harbor porpoise vocalizations include clicks and pulses (Ketten 1998), as well as whistle-like signals and echolocation clicks (Verboom and Kastelein 1995). The dominant frequency range is 110 to 150 kHz (Ketten 1998) and a behavioral audiogram indicated the range of best sensitivity is 8 to 32 kHz at levels between 45 and 50 decibels re 1 micropascal-meter (dB re 1 μPa-m) (Andersen 1970) and 16 to 140 kHz (Kastelein et al. 2002). The Temporary Threshold Shift (TTS) criteria was estimated at approximately 163 dB sound exposure level (SEL) from a 4 kHz airgun blast (Lucke et al. 2009).

EXTRALIMITAL OR RARE SPECIES

Extralimital species currently do not regularly enter the Bay, but may occur sporadically in the Bay or strand in the Bay, and some species may only occur seasonally. These species are mentioned because they infrequently enter the Bay and, while very unlikely, could be near Pier E3 during implosion activities.

Common Bottlenose Dolphin (California coastal stock)

Status: The common bottlenose dolphin is protected under the MMPA, but is not listed as a strategic or depleted species under the MMPA (Carretta et al. 2013), or listed as endangered or threatened under the ESA. The population size for the California coastal stock is estimated at 323 dolphins and is stable (CV = 0.13; Carretta et al. 2012). SFOBB Area: Bottlenose dolphins have only recently begun to enter the Bay. Movements primarily have been just east of the Golden Gate Bridge and along the west coastline of the Bay, south to Redwood City (J. Stern, Pers. Comm. Golden Gate Cetacean Research). Bottlenose dolphins have not been observed in the vicinity of the SFOBB Project. However, bottlenose dolphins are known to frequent bay and estuary areas. As their population becomes more established in Northern California, they may venture into other areas of the Bay.

Southern Sea Otter (California Population)

The southern sea otter (*Enhydra lutris*) is protected under the MMPA and is listed as threatened under the ESA (Carretta et al. 2012). The estimated population size is 2,500 sea otters (Carretta et al. 2012). Sea otters are common in the near-shore waters from Point Conception to Half Moon Bay but juvenile sea otters occasionally wander well beyond the observed range limits. Sea otters are not a regular visitor to the Bay, but several animals have been observed in the Bay in the last decade (Geno De Rango, Pers. Comm., Marine Mammal Center, 2013).

Northern Fur Seal (California Stock)

The northern fur seal (*Callorhinus ursinus*) is protected under the MMPA and is not listed as a depleted or strategic stock under the MMPA (Carretta et al. 2012). Northern fur seals are not listed as threatened or endangered under the ESA. The estimated Eastern Pacific stock is 611,617 fur seals (Allen and Angliss 2013) and 12,844 fur seals for the California Stock of San Miguel and Farallon Islands (Carretta et al. 2014). It is likely that only sick or injured northern fur seals would enter the Bay. Northern fur seals are not a regular visitor but several animals have stranded in the Bay since the 1980s (Geno De Rango, Pers. Comm., Marine Mammal Center, 2013).

Gray Whale (Eastern North Pacific)

The gray whale is protected under the MMPA, but is not listed as a strategic or depleted species under the MMPA (Carretta et al. 2013), or listed as endangered or threatened under the ESA. The population size for the eastern north Pacific stock is estimated at 19,126 (CV=0.71; Laake et al. 2009) and is increasing (Punt and Wade 2010). Reports from the Marine Mammal Center (MMC) indicate that, since 1999, gray whale sightings in the Bay have become more common with at least two to six whales entering the Bay annually. Most gray whale sightings have occurred during the spring migration north. Although none have been sighting near the east span of the SFOBB, there have been reports of whales at the north end of Treasure Island during March and one sighting about 1,000 yards (0.6 mile) south of YBI (P. Thorson, GANDA, February 2014).

Humpback Whale (California/Oregon/Washington Stock)

The humpback whale (*Megaptera novaeangliae*) is protected under the MMPA and is listed as a depleted and strategic stock under the MMPA (Carretta et al. 2012). Humpback whales are listed as endangered under the ESA. The current best estimate for the California, Oregon, and Washington stock is 1,918 whales (Carretta et al. 2014). There are several reports of humpback whales entering the Bay and heading up the Delta waterway. The most recent occurrence was in 2007 when an injured mother and calf entered the Bay for seven days (Gulland et al. 2008).

Minke Whale (California/Oregon/Washington Stock)

The minke whale (*Balaenoptera acutorostrata scammoni*) is protected under the MMPA and is not listed as a depleted or strategic stock under the MMPA (Carretta et al. 2012). Minke whales are not listed as threatened or endangered under the ESA. The current best estimate for the California, Oregon, and Washington stock is 478 whales (Carretta et al. 2012). Minke whales are not a regular visitor to the Bay but have been observed several times since the 1980s (Geno De Rango, Pers. Comm., Marine Mammal Center, 2013).

Sperm Whale (California/Oregon/Washington Stock)

The sperm whale (*Physeter macrocephalus*) is protected under the MMPA and is listed as a depleted and strategic stock under the MMPA (Carretta et al. 2012). Sperm whales are listed as endangered under the ESA. The current best estimate for the California, Oregon, and Washington stock is 971 whales (Carretta et al. 2012). Sperm whales are not a regular visitor to the Bay but

have been observed once since the 1980s (Geno De Rango, Pers. Comm., Marine Mammal Center, 2013).

Fin Whale (California/Oregon/Washington Stock)

The fin whale (*Balaenoptera physalus physalus*) is protected under the MMPA and is listed as a depleted and strategic stock under the MMPA (Carretta et al. 2012). Fin whales are listed as endangered under the ESA. The current best estimate for the California, Oregon, and Washington stock is 3,051 whales (Carretta et al. 2014). Fin whales are not a regular visitor to the Bay but have been observed once since the 1980s (Geno De Rango, Pers. Comm., Marine Mammal Center, 2013).

Steller Sea Lion (Eastern Stock, California Population)

The Steller sea lion (*Eumetopias jubatus*) is protected under the MMPA and is not listed as a depleted and strategic stock under the MMPA (Allen and Angliss 2014). The eastern stock of Steller sea lions are no longer listed as threatened under the ESA (NOAA 2013). The current best estimate for the Eastern stock is 63,160 to 78,198 sea lions, with most of the population in Southeast Alaska and British Columbia (Allen and Angliss 2014). From 1982 to 2009, the population of Steller sea lions using central California (Año Nuevo and the Farallon Islands) has been relatively stable or slowly decreasing to approximately 2,781 in 2011 (Allen and Angliss 2013). Steller sea lions are not a regular visitor to the Bay but several animals have stranded in the Bay since the 1980s (Geno De Rango, Pers. Comm., Marine Mammal Center, 2013).

Short-Beaked Common Dolphin (California/Oregon/Washington Stock)

The short-beaked common dolphin (*Delphinus delphis delphis*) is protected under the MMPA and is not listed as a depleted or strategic stock under the MMPA (Carretta et al. 2012). Common dolphins are not listed as threatened or endangered under the ESA. The short-beaked common dolphin is the most abundant cetacean in California waters, although they tend to be found further offshore. The current best estimate for the California, Oregon, and Washington stock is 411,211 dolphins (CV =0.21; Carretta et al. 2012). There is only one report of a short-beaked common dolphin stranding in the Bay since the 1980s (Geno De Rango, Pers. Comm., Marine Mammal Center, 2013).

Table 2. Summary of the seasonal occurrence and distribution, pupping/calving seasons, pinniped haul-out sites, dive duration, hearing range, and efficacy of real time acoustic monitoring of marine mammals with potential to occur near Pier E3

Species	Population in SF Bay	Distribution in SF Bay	Seasons Present In SF Bay	Pupping/ Calving Season	Dive Duration	Audiogram (Maximum Sensitivity)	Real Time Acoustic Monitoring	Group Or Pod Size	Haul-Out Sites (Distance to East Span)
Pacific Harbor Seal	Up to 2,000	Throughout Bay	All Seasons	March-June (In SF Bay)	3 to 10 minutes (max of 30 min)	1-60 kHz (32 kHz)	No	1	YBI (4,593 feet; 1,400 meters)
California Sea Lion	Up to 2,000	Throughout Bay	Summer to Winter	May-July (not SF Bay)	3-7 minutes (max of 10 min)	1-40 kHz (2-16 kHz)	No	1	Pier 39 (3.2 miles; 5.2 kilometers)
Northern Elephant Seal	Up to 100 (stranded juveniles)	Throughout Bay	Spring to Fall	December-March	10-15 minutes (max of 45 min)	3.2-55 kHz (3.2-45 kHz)	No	1	Mostly stranded, some haul out on YBI and TI
Harbor Porpoise	Up to 200	Western and Northern Bay	All Seasons	Spring (Not SF Bay)	Short Dives up to 5 minutes	8–140 kHz (16-140 kHz)	Yes	Up to 6	N/A

5. The Type of Incidental Taking Authorization That Is Being Requested (i.e., Takes By Harassment Only; Takes By Harassment, Injury and/or Death) And The Method Of Incidental Taking.

The Department requests an Incidental Take Authorization (IHA) pursuant to Section 101 (a)(5)(A) of the MMPA for the harassment of marine mammals incidental to demolition activities for the original east span of the SFOBB. Marine mammals within the Bay may be incidentally taken by Level B Harassment during demolition using controlled charges (impulse sound) related to the demolition of the original east span of the SFOBB. The number of each marine mammal species exposed to implosion of Pier E3 were calculated based on acoustic propagation models for each activity and the estimated density of each species in the exposed areas.

Estimation of Distances to Marine Mammal Criteria:

Blast Confinement:

Department engineers and consultants have determined that the blast model for the proposed Pier E3 implosion should incorporate a degree of confinement, rather than being modeled as an open-water blast. Confinement is a concept in blasting that predicts the amount of blast energy that is expected to be absorbed by the surrounding structural material, resulting in the fracturing necessary for demolition. The energy beyond that absorbed by the material is the energy that produces the pressure wave propagating away from the source. The Department has determined that modeling with confinement was appropriate for the proposed Pier E3 blast by evaluating blast results from case study data for underwater implosions similar to the proposed SFOBB Pier E3 implosion. In addition, the Department compared case study results to published blast models that incorporate a degree of confinement.

Data from 39 underwater concrete blasts (Figure 17) were provided to the Department to evaluate potential equations for modeling blast-induced peak pressures and subsequent effects to marine mammals. Data provided included the charge weight, observed peak pressure, distance of peak pressure observation, and the modeled peak pressure using Cole's confined equation, Cole's unconfined equation, and Oriard's conservative concrete equation (Cole 1948; Oriard 2002). All 39 blasts occurred in approximately 55 feet (16.8 meters) of water, similar to the maximum water depth around Pier E3. In addition, all blasts had burdens (i.e., distance from the charge to the outside side of the material being fractured) of approximately 1.5 to 2 feet (0.5 to 0.6 meter). Burdens for Pier E3 also are estimated to be in this range.

Cole's unconfined equation greatly overestimated peak pressures for all blasts while Cole's confined equation appeared to most accurately predict observed peak pressures. Oriard's conservative concrete equation overestimated peak pressures, but not as dramatically as under Cole's unconfined equation. Because the proposed project is a demonstration study and the Department recognizes some uncertainty in predicting the hydroacoustic effects, the Department has used Oriard's equation when modeling potential hydroacoustic impacts to marine mammals. The Department has opted to use more conservative methods to ensure an additional level of safety when predicting the monitoring zone and potential impact areas to marine mammals from the proposed Project.

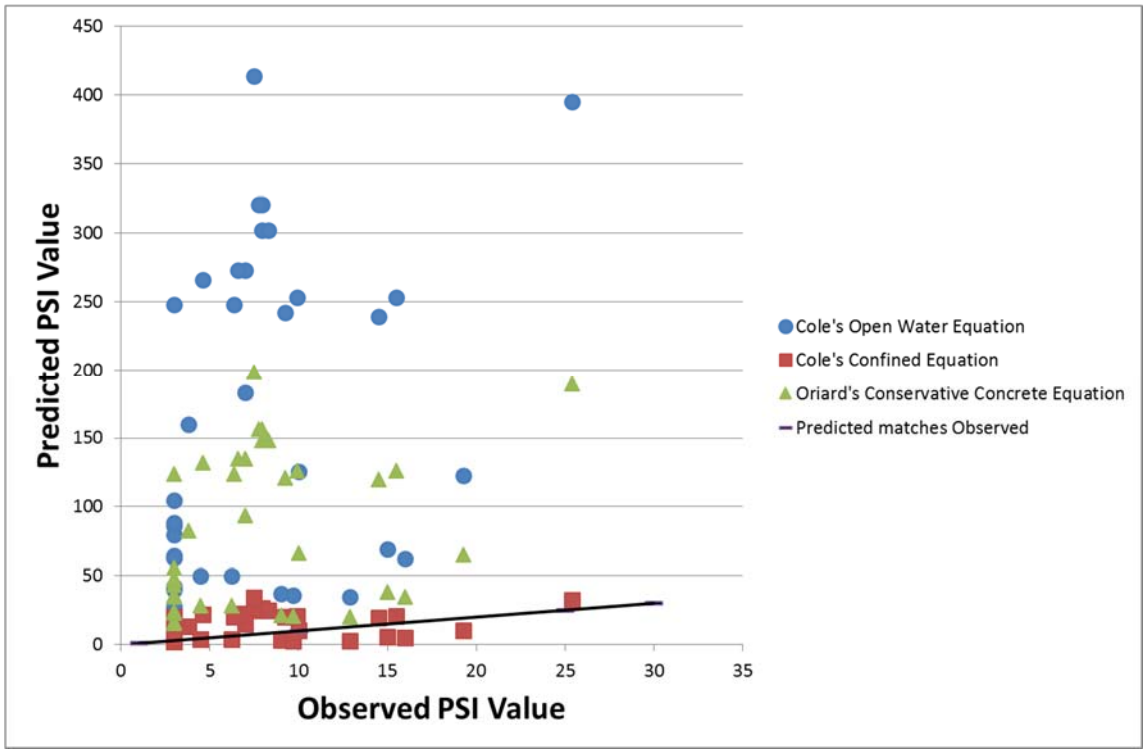

Figure 17. Observed and predicted peak pressure values for 39 underwater concrete blasts.

Pier E3 Hydroacoustic Modeling

This discussion presents the methods used to estimate underwater noise metrics as a function of distance for proposed implosion of Pier E3 of the original east span of the SFOBB. The applicable metrics discussed are the peak pressure (P_{pk}) expressed in dB, the accumulated SEL also expressed in dB, and the positive acoustic impulse (I) in Pa-sec. The criteria for marine mammals are grouped into behavioral response, slight injury, and mortality, and the specific acoustic thresholds depend on group and species. These are summarized in Figure 18. The metrics for these are criteria defined as:

<u>Peak pressure level</u>

$$L_{pk} = 20\ Log_{10}\left(P_{pk}/P_{ref}\right) \qquad (1)$$

where L_{pk} is the peak level in dB and p_{ref} is the reference pressure of 1µPa;

<u>SEL</u>

$$SEL = 10\ Log_{10}\left(\int_0^T \frac{P^2(t)\,dt}{P_{ref}^2 \cdot T_{ref}}\right) \qquad (2)$$

where T is the duration of the event, $P^2(t)$ is the instantaneous pressure squared and T_{ref} is the reference time of 1 second;

<u>Impulse:</u>

$$I = \int_0^T \left(P(t)dt \big/ P_{ref}\right) \qquad (3)$$

where T is the duration of the initial positive portion of p(t). In order to calculate these quantities, p (t) for the blast event is needed as a function of distance from the blast, or alternatively, empirical relationship can be used for L_{pk} and I. From Figure 18, it should be noted that for the SEL criteria, there are different designations for the SEL for each group/species. These refer to group/species specific filter shapes that are to be applied to the pressure signal. For L_{pk} and I, no filters are specified.

GENERAL ASSUMPTIONS

The blast event will consist of a total of 588 individual delays of varying charge weight; the largest is 35 pounds/delay and the smallest is 21 pounds/delay. The blasting sequence is rather complex. On the full height walls, 30 pound weights will be used for the portion below mud line, 35 pound weights will be used in the lower structure immediately above mud line, 29.6 pounds in the mid-structure, and 21 pounds in the upper structure. Full details on the delay weights and locations can be found in the Blast Plan (Appendix A). Blasts will start in several interior webs of the southern portion of the structure followed by the outer walls of the south side. The blasts in the inner walls will occur just prior to the adjacent outer walls. The interior first, exterior second blast sequence will continue across the structure moving from south to north. The time for the 588 detonations is 5.3 seconds with a minimum delay time of 9 milliseconds (ms) between detonations. As the blasting progresses, locations to east, north, and west of the pier will be shielded from the blasting on the interior of the structure from the still-standing exterior walls of the pier. However, towards the conclusion of the blast, each direction will experience blasts from the outer walls that are not shielded.

To estimate P_{pk} and $P^2(t)$, several assumptions were made. For simplification, it was assumed that there is only one blast distance and it is to the closest point on the pier from the receiver point. In actuality for almost all explosions, distances from the blast will be greater as the pier is approximately 135 feet (41 meters) across and 80 feet (24 meters) wide. Based on these dimensions, the actual blast point could be up to 135 feet (41 meters) further from the receptor point used for the calculation. As a result, the calculated peak level is the maximum expected for one 35 pound blast while the other levels would be lower depending on the distance from the actual blast location to the calculation point and weight of the charge. In other words, the pressure received at the calculation point would not be 588 signals of the same amplitude, but would be from one at the estimated level for a 35 pound charge and 587 of varying lower amplitudes. Similarly, in the vertical direction, the location varies over a height of about 50 feet (15 meters) and those blasts that are not at the same depth as the receiver would also be lower. This effect of variation in assumed blast to receiver distance will be most pronounced close to the pier, while at distances of about 1,000 feet (305 meters) or greater, the effect would be less than 1 dB.

Group	Species	Behavior		Slight Injury			Mortality
		Behavioral (for ≥2 pulses/24 hours)	TTS	PTS	Gastro-Intestinal Tract	Lung	
Low-frequency Cetaceans	Mysticetes	167 dB SEL (LF_{II})	172 dB SEL (LF_{II}) or 224 dB peak SPL	187 dB SEL (LF_{II}) or 230 dB peak SPL	237 dB SPL or 104 psi	39.1 $M^{1/3}$ $(1+[D_{Rm}/10.081])^{1/2}$ Pa-sec Where: M = mass of the animals in kg D_{Rm} = depth of the receiver (animal) in meters	91.4 $M^{1/3}$ $(1+[D_{Rm}/10.081])^{1/2}$ Pa-sec Where: M = mass of the animals in kg D_{Rm} = depth of the receiver (animal) in meters
Mid-frequency Cetaceans	Most delphinids, medium and large toothed whales	167 dB SEL (MF_{II})	172 dB SEL (MF_{II}) or 224 dB peak SPL	187 dB SEL (MF_{II})or 230 dB peak SPL			
High-frequency Cetaceans	Porpoises and *Kogia* spp.	141 dB SEL (HF_{II})	146 dB SEL (HF_{II}) or 195 dB peak SPL	161 dB SEL (HF_{II}) or 201 dB peak SPL			
Phocidae	Hawaiian monk, elephant, and harbor seal	172 dB SEL (P_{WI})	177 dB SEL (P_{WI}) or 212 dB peak SPL	192 dB SEL (P_{WI}) or 218 dB peak SPL			
Otariidae	Sea lions and fur seals	195 dB SEL (O_{WI})	200 dB SEL (O_{WI}) or 212 dB peak SPL	215 dB SEL (O_{WI}) or 218 dB peak SPL			

Figure 18. Noise criteria and thresholds for underwater blasting

In the calculations, it was also assumed that there would be no self-shielding of the pier as the explosions progress. From the above discussion of the blast sequence, some shielding of the blasts along the interior of the pier will occur. However, the blasts that occur in outer wall (towards the end of the implosion) will not be shielded for all blasts. A blast in the outer wall that has a direct line of sight to the receptor calculation point will not be shielded and will generate the highest peak pressure relative to be compared to the L_{pk} criterion. The cumulative SEL and the root-mean-square (RMS) levels; however, will be reduced to some degree by the outer walls until they are demolished as these metrics are defined by the pressure received throughout the entire 5.3 second event. However, due to the complexity of the blast sequence, this shielding effect was not considered in the calculated SEL and RMS levels.

Based on the Blast Plan, the delays are to be placed in 2¾ to 3 inch (7 to 7.6 centimeter) diameter holes drilled into the concrete pier structure. The outer walls of the pier are nominally 3 feet-11½ inch (1.5 meter) thick and inner walls are nominally 3 feet (0.9 meter) thick. Individual blasts should be not exposed to open water and some confinement of the blasts is expected. For confined blasts, the predicted pressures can be reduced by 65 to 95% (Nedwell & Thandavamoorthy 1992; Rickman 2000; Oriard 2002; Rivey 2011), corresponding to multiplication factors from 0.35 to 0.05, respectively. Based on a review of the available literature and recent data from similar explosive projects, the Department has decided to use a conservative confinement factor of K=7500 which equates to a 65% reduction in pressure and by a multiplication factor of 0.3472.

Another assumption was to consider only the direct wave from an individual blast. In shallow water, the signal at the receiver point could consist of the direct wave, surface-relief wave generated by the water/air interface, a reflected wave from the bottom, and a wave transmitted through the bottom material (USACE 1991). For estimating P_{pk} , only the direct wave is considered as it will have the highest magnitude and will arrive at the receiver location before any other wave component. However, P(t) after the arrival of the direct wave peak pressure will be effected. The surface-relief wave is negative so that when it arrives at the receiver location, it will reduce the positive pressure of the direct wave and can make the total pressure negative at times after the arrival of the initial positive peak pressure. Since the SEL is a pressure squared quantity, any negative pressure can also contribute to the SEL. However, the amplitude and arrival time of the surface-relief wave depends on the geometry of the propagation case, that is, depth of water, depth of blast, and distance and depth of the receiver point. The effect of this assumption is discussed further in the section on SEL.

ESTIMATION OF PEAK PRESSURE

Peak pressures were estimated by following the modified version of the Cole Equation for prediction of blasts in open, deep water (Cole 1948). The peak pressure is determined by:

$$P_{pk} = K(\lambda)^{-1.13} \qquad (4)$$

where P_{pk} is peak pressure in pounds per square inch (psi), and λ is the scaled range given by $R/W^{1/3}$ in which R is the distance in feet and W is the weight of the explosive charge in pounds. A modified version of the Cole Equation has been documented in U.S. Army Corps of Engineers (USACE) Technical Letter No. 1110-8-11(FR) and is applicable to shallow water cases such as that of the Pier E3 demolition (USACE 1991). The constant *K* factor multiplier in the USACE calculation is 21,600 for an open-water blast instead of the 22,550 from the original Cole Expression. This factor is slightly less (~4%) than the original Cole. The decay factor (-1.13) used in the USACE modified equation remains the same as the original Cole Equation. To account for the confining effect of the concrete pier structure, a conservative *K* factor of 7,500 was used corresponding to multiplying USACE P_{pk} by a factor of 0.3472. With a minimum delay between of blast of 9 ms, the individual delays will be spaced sufficiently far in time to avoid addition of the peak pressures. In this case, the peak pressure is defined by that calculated for the largest charge weight of 35 pounds/delay. A BAS is specified in the Blast Plan. Based on the literature and recent results from similar projects, reductions in the pressure peak of 85% to 90% or more are expected. For determining P_{pk} in this analysis, a conservative reduction of 80% has been used. Based on values of confinement, BAS performance, and the General Assumptions above, the calculated peak pressures are expected to be conservative.

ESTIMATION OF SEL VALUES

Estimating the weighted SEL values for the different groups/species is a multiple step process. The first step is to estimate SEL values as a function of distance from the blast pressure versus time histories for each of the six charge weights as a function of distance. The open-water equation used for this calculation was that modified by the USACE (1991) based on methods pioneered by Cole (1948). Pressure as a function of time is given by:

$$p(t) = P_{pk} e^{-\left(\frac{t-t_a}{\theta}\right)} \qquad (5)$$

where t_a is given as R/5000 and θ is:

$$\theta = 6.0x10^{-5} W^{1/3} (\lambda)^{0.18} \qquad (6)$$

Some of the time histories produced by these equations are shown in Figure 19 for varying distances from the blast. These calculations were then extended to distances out to 160,000 feet (48.8 kilometers).

As discussed previously, there are other wave components that could be considered in the SEL estimation, including the surface relief wave, reflection from the bottom, and transmission through and re-radiation from the bottom. Little or no contribution is expected from the bottom based on its sedimentary nature and previous experiences from measuring noise from underwater pile driving in the area around Pier E3. The negative surface relief wave could be a factor in the SEL estimation. This wave could either increase or decrease the SEL depending on its arrival time relative to the direct wave. For small differences in arrival time, the surface relief will decrease the total SEL as a portion of the positive direct wave is negated by the addition of the negative surface relief wave. This is illustrated in Figure 20 for a blast and receptor depth of 30 feet (9 meters) and a range of 1,000 feet (305 meters). In this case, the surface relief wave essentially balances the direct wave so that the total SEL is within a few tenths of a decibel of the direct wave only. For closer distances and when the receptor and blast locations are near the bottom, the total SEL can become greater than the direct wave SEL, but only by less than 3 dB. However, whenever the source or receiver is near the surface, the direct wave SEL will be greater than the total SEL and can approach being 10 dB greater for distances beyond 1,000 feet (305 meters). As a result, the surface relief wave is ignored in this analysis knowing that the surface relief wave would only tend to produce lower SEL values than the direct wave.

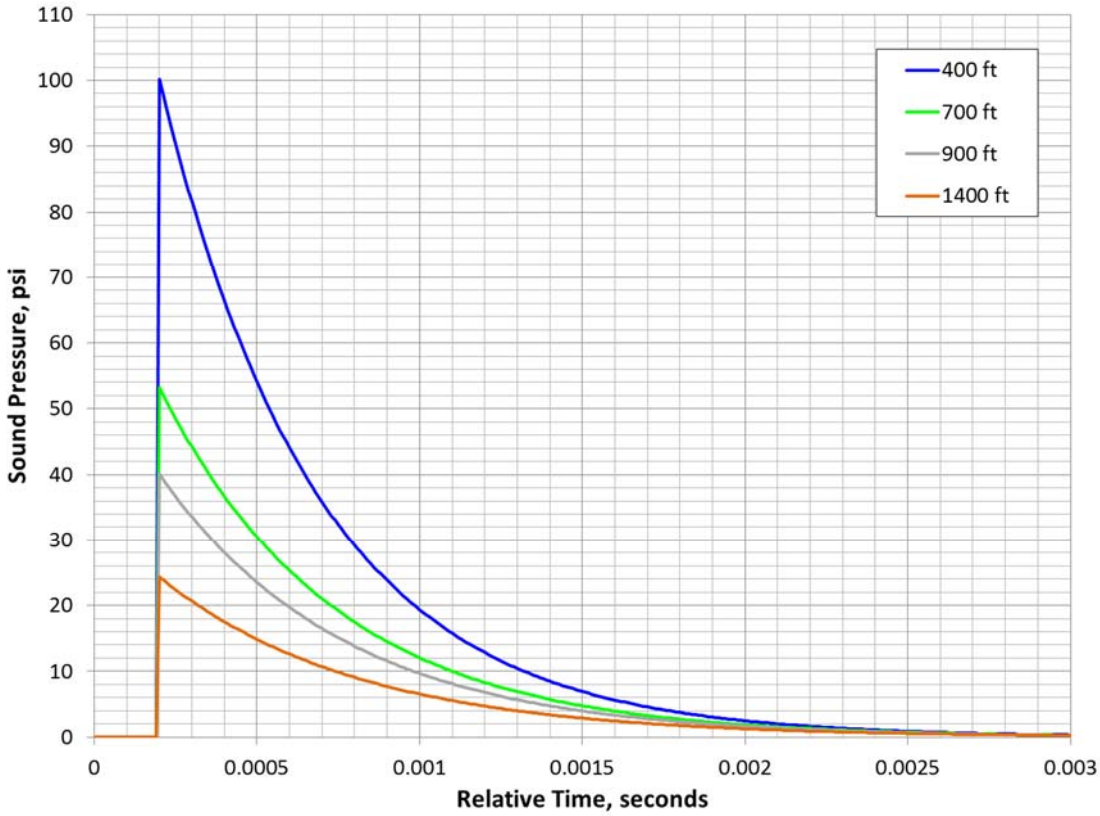

Figure 19. Blast wave forms vs. time relative the same arrival time calculated for different blast distances

Considering only the direct wave, the time histories such as those in Figure 19 were squared and summed in a numerical version of Equation 2 to calculate single blast SEL for the each blast weight. These calculations were then extended to distances out to 160,000 feet (48.8 kilometers). To determine the cumulative SEL for all 588 blasts, the single blast SEL values as a function of distance were calculated for the other charge weights of 35, 32.5, 30, 29.6, 26, 24, 22.5, and 21 pounds. For each weight, the cumulative SEL was determined by adding 10Log (N) where N is the number of the blasts for each weight. For example, 21.3 dB was added to the 35 pound single blast SEL to account for 135 blasts of this charge weight. The values for all of the charge weights are shown in Table 3. These cumulative SEL values for each charge weight were then summed (on an energy basis) to get the total accumulative SEL for the unconfined blast sequence. To account for the confinement factor of 0.3472 (*K*=7500), 20Log(0.3472) or -9.2 dB was added to the unconfined values.

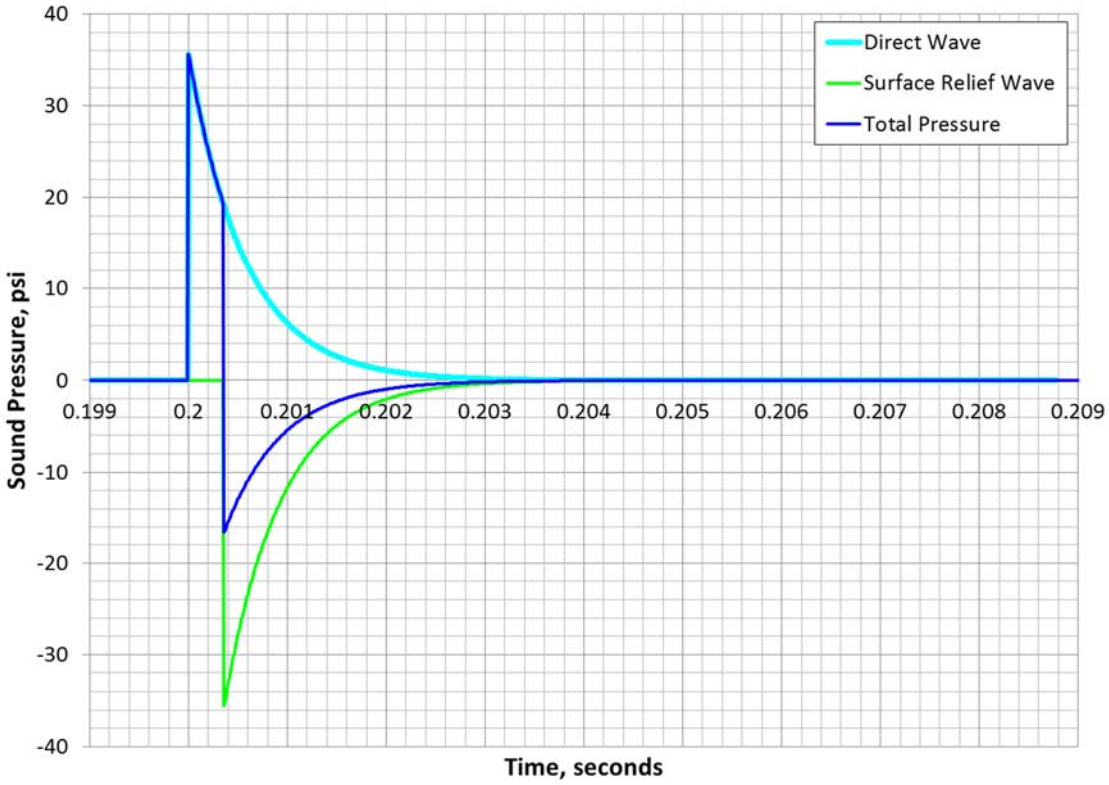

Figure 20. Total pressure versus time history for combined direct and surface relief wave 1,000 feet from the blast with source and receptor 30 feet deep

Table 3. Charge weights per delay, number of delays, & added level to accumulate number of blasts

Pounds/Delay	Total Number of Delays, N	10Log(N), dB
35	135	21.3
32.5	24	13.8
30	135	21.3
29.6	111	20.5
26	24	13.8
24	12	10.8
22.5	12	10.8
21	135	21.3
Total	**588**	

For each of the marine mammal groupings included in Figure 18, specific filter shapes apply to each group. The filters corresponding to Low-Frequency Cetaceans (LF_{II}), Mid-Frequency Cetaceans (MF_{II}), High-Frequency Cetaceans (HF_{II}), Phocidaes (P_{WI}), and Otariidaes (O_{WI}) are shown in Figure 21. To apply this weighting, the Fast Fourier Transform (FFT) was calculated for the time histories at each analysis distance. Each FFT was then filtered using the frequency weighted specified for each group/species from Figure 21. Filter factors were then determined for each distance by subtracting the filtered result from the unfiltered FFT data and determining the overall noise reduction in decibels. These filter factors were applied to the accumulated SEL determined for the entire blast event for each distance from the Pier.

The BAS of the Blast Plan will have an effect on the wave once a blast passes through it. In a research report by USACE in 1964, the performance of a BAS was examined in detail (USACE 1964). It was reported that the BAS reduces the peak pressure and elongates the pressure time history as shown in Figure 22. It has also been found that for an energy metric such as SEL, the reduction produced by the BAS was equal to or greater than the reduction of the peak pressure (USACE 1991; Rude 2002; Rude and Lee 2007; Rivey 2011). To estimate the reduction for SEL values due to the BAS proposed in the Blast Plan, SEL was reduced by 80%. Effectively, this was done by reducing the SEL by 20 Log (0.20), or 14 dB. Delays below the mudline, which will be located below the BAS, were also reduced by 80% based on an assumption that the outside Pier walls here (which will not be removed) and Bay mud sediments will provide a similar level of attenuation. These SEL values and those without the BAS were then compared to the appropriate criteria for each marine mammal group. Because the calculation of SEL is based on the peak pressure, these estimates for the direct wave component are expected to be conservative for the same reasons as described for the peak pressures.

ESTIMATION OF POSITIVE IMPLUSE

To estimate positive impulse values, the expression originally developed by Cole for open water was used (Cole 1948). This expression includes only contributions from the direct wave neglecting any contribution from the surface relief, bottom reflected, and bottom transmitted consistent with the assumptions used to estimate SEL. In this case, impulse is given by:

$$I = 2.18 \times W^{1/3} \times \left(\frac{W^{1/3}}{R}\right)^{1.05} \qquad (7)$$

with the variables defined in Equation 4. The impulse can also equivalently be calculated from wave forms as shown in Figure 19. Equation 5 produces impulse values in psi-msec which were converted to Pa-sec by multiplying by 6.9 for comparison to the marine mammal criteria.

Unlike P_{pk} and SEL, no reduction by the BAS is assumed for the impulse calculation. As illustrated in Figure 22, the area under the p(t) curve under goes little change after passing the BAS. The peak pressure is reduced as noted previously, however, since the p(t) expands in duration, the area change is minimal. This behavior is well documented in the literature (Cole 1948; USACE 1964; USACE 1991; Rickman 2000). As discussed above, this is not the case for SEL which is determined by the area under the $p^2(t)$ curve.

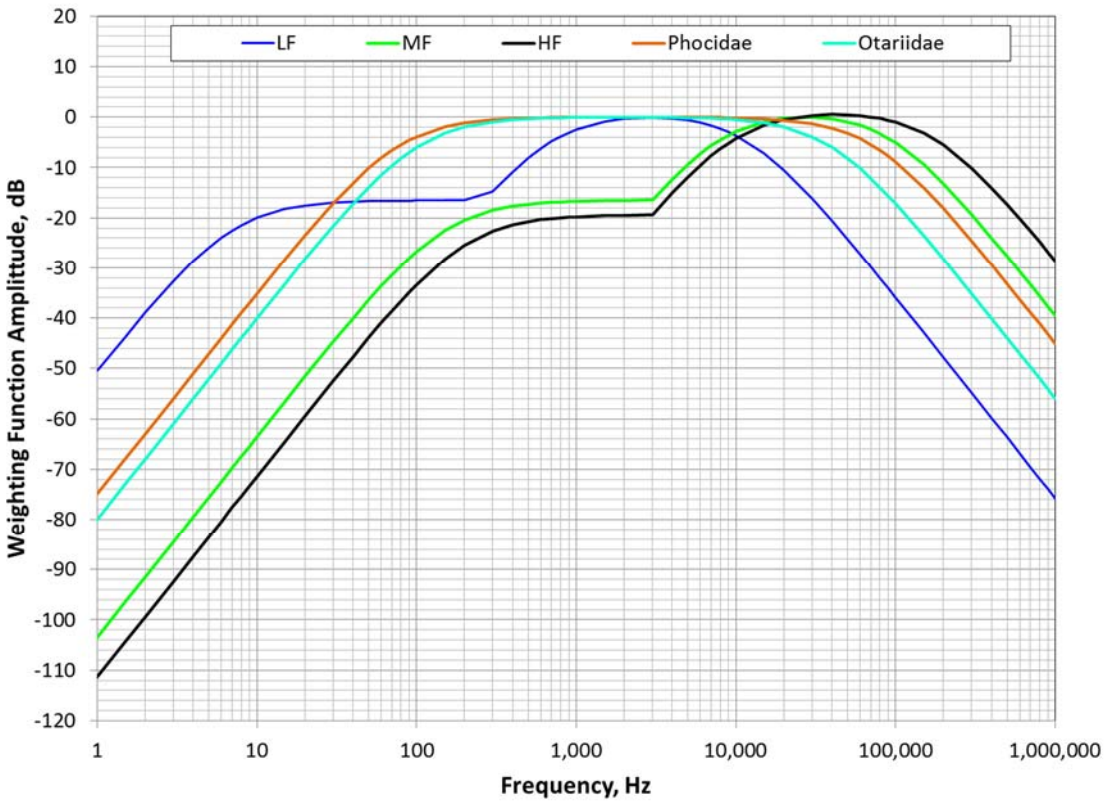

Figure 21. Filters for marine mammal – low frequency (LFII), mid frequency (MFII), high frequency (HFII), Phocidae (PWI), and Otariidaes (OWI)

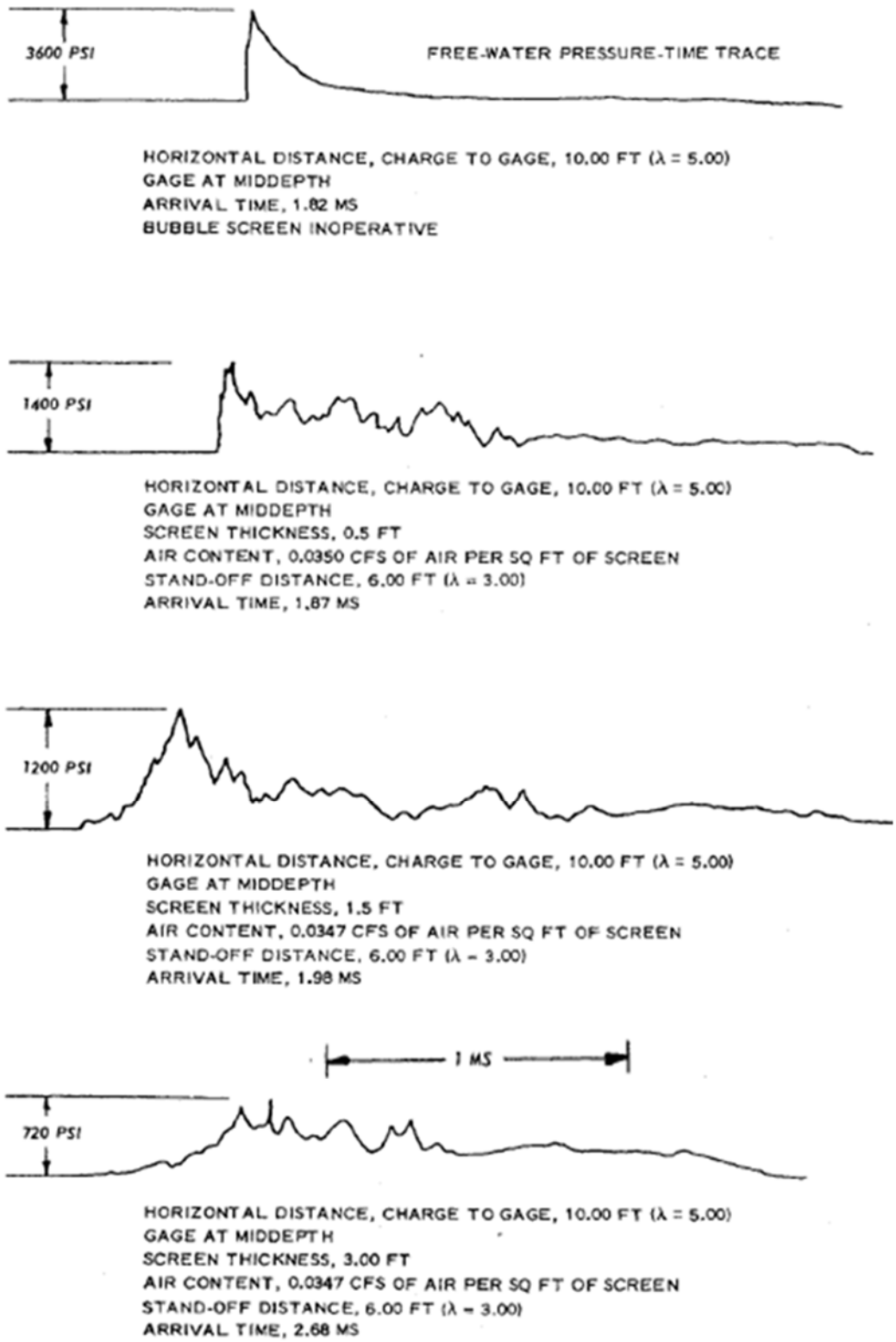

Figure 22. The effect of bubble screens of different parameters on underwater unconfined blast (Cole 1948)

SUMMARY

The estimated distances (Table 4) to the marine mammal criteria for peak pressure, SEL, and impulse are based on established relationships between charge weight and distance from the literature. The estimated distances were determined assuming unconfined open water blasts from the original Cole equations or the Cole equations modified by USACE. The assumption of open water neglects several effects that could produce lower levels than estimated. These include no shielding by the pier structure prior a specific blast, confining of the individual delays in the holes drilled into the pier structure, and longer distances to individual blasts than assumed by closest distance between the pier and the receptor point. For SEL, the assumption of open water blasts neglects the surface relief wave which at longer distances from the pier, would tend to reduce the SEL due to interference with the direct wave. Although the estimated levels and distances may be conservative, there is sufficient uncertainty in the blast event and its propagation such that further, less conservative adjustments would not be appropriate.

Table 4. Estimated distances to NMFS marine mammal impulse criteria for Level B Harassment, Level A Harassment, and mortality from the proposed Pier E3 implosion. A BAS with 80% efficiency in acoustic attenuation is assumed for the implosion. The largest criteria distance (i.e., more conservative) is presented.

Species	Level B Criteria		Level A Criteria			Mortality
	Behavioral Response	TTS	PTS	GI Track	Lung Injury	
Pacific Harbor Seal	9,700 ft (2,957 m)	5,700 ft (1,737 m)	1,160 ft (354 m)	35 ft (11 m)	450 ft (137 m)	205 ft (63 m)
California Sea Lion	800 ft (244 m)	470 ft (143 m)	97 ft (30 m)	35 ft (11 m)	450 ft (137 m)	205 ft (63 m)
Northern Elephant Seal	9,700 ft (2,957 m)	5,700 ft (1,737 m)	1,160 ft (354 m)	35 ft (11 m)	450 ft (137 m)	205 ft (63 m)
Harbor Porpoise	44,500 ft (13,564 m)	26,500 ft (8,077 m)	5,800 ft (1,768 m)	35 ft (11 m)	450 ft (137 m)	205 ft (63 m)

Estimates of Species Densities and Exposures

There are no systematic line transect surveys of marine mammals within San Francisco Bay, therefore, the in water densities of harbor seals, California sea lions, and harbor porpoises were calculated from 14 years of observations during monitoring for the SFOBB construction and demolition. During the 210 days of monitoring (including 15 days of baseline monitoring in 2003), 657 harbor seals, 69 California sea lions and three harbor porpoises were observed within the waters of the east span of the SFOBB. Density estimates for other species were made from stranding data provided by the MMC (Sausalito, CA; Northern elephant seal).

Pacific Harbor Seal Density Estimates

Most data on harbor seal populations are collected while the seals are hauled out. This is because it is much easier to count individuals when they are out of the water. In-water density estimates rely on haul-out counts, the percentage of seals not on shore based on radio telemetry studies, and the size of the foraging range of the population. Harbor seal density in the water can vary greatly depending on weather conditions or the availability of prey. For example, during Pacific herring runs further north in the Bay (near Richardson Bay, outside of the Pier E3 hydroacoustic zone) in February 2014, very few harbor seals were observed foraging near YBI or transiting through the SFOBB area for approximately two weeks. Sightings went from a high of 16 harbor seal individuals foraging or in transit in one day to 0-2 seals per day in transit or foraging through the SFOBB area (Department 2014). Calculated harbor seal density (Table 5) is a per day estimate of harbor seals in a one kilometer square (km^2) area within the fall/winter or spring/summer seasons.

Harbor seal density for the proposed project was calculated from all observations during SFOBB Project monitoring from 2000 to 2014. These observations included data from baseline, pre, during and post pile driving and onshore implosion activities. During this time, the population of harbor seals within the Bay has remained stable (Manugian 2013), therefore, we do not anticipate significant differences in numbers or behaviors of seals hauling out, foraging or in their movements over that 15 year period. All harbor seal observations within a km^2 area were used in the estimate. Distances were recorded using a laser range finder (Bushnell Yardage Pro Elite 1500; ± 1.0 yards accuracy). Care was taken to eliminate multiple observations of the same animal although this was difficult when more than three seals were foraging in the same area.

Density of harbor seals was highest near YBI and Treasure Island, probably due to the haul-out site and nearby foraging areas in the Coast Guard and Clipper coves (Figure 16). Therefore, density estimates were calculated for a higher density area within 3,936 feet (1,200 meters) west of Pier E3, which includes these two foraging coves. A lower density estimate was calculated from the area east of Pier E3 and beyond 3,936 feet (1,200 meters) to the north and south of Pier E3.

These density estimates were then extrapolated to the threshold criteria areas delineated by the hydroacoustic models to calculate the number of harbor seals likely to be exposed (Table 6).

California Sea Lion Density Estimates

Most data on California sea lion populations are collected while the seals are hauled out as it is much easier to count individuals when they are out of the water. In-water density estimates rely on haul-out counts, the percentage of sea lions not on shore based on radio telemetry studies, and the size of the foraging range of the population. Sea lion density, like harbor seal densities, in the water can vary greatly depending on weather conditions, the availability of prey, and the season. For example, sea lion density increases during the summer and fall after the end of the breeding season at the Southern California rookeries.

For the proposed project, California sea lion density was calculated from all observations during SFOBB monitoring from 2000 to 2014. These observations included data from baseline, pre, during and post pile driving and onshore implosion activities. During this time, the population of sea lions within the Bay has remained stable as have the numbers observed near the SFOBB (Manugian 2013). As a result, we do not anticipate significant differences in the number of sea

lion or their movements over that 15 year period. All sea lion observations within a km^2 area were used in the estimate. Distances were recorded using a laser range finder (Bushnell Yardage Pro Elite 1500; ± 1.0 yards accuracy). Care was taken to eliminate multiple observations of the same animal, although most sea lion observations involve a single animal. Calculated California sea lion density is a per day estimate of sea lions in a one km^2 area within the fall/winter or spring/summer seasons.

Northern Elephant Seal Density Estimates

Northern elephant seal density around Pier E3 was calculated from the stranding records of the MMC from 2004 to 2014. These data included both injured or sick seals and healthy seals. Approximately 100 elephant seals were reported within the Bay during this time, most of these hauled out and were likely sick or starving. The actual number of individuals within the Bay may be higher as not all individuals would necessarily have hauled out. Some individuals may have simply left the Bay soon after entering. Data from the MMC show several elephant seals stranding on Treasure Island and one healthy elephant seal was observed resting on the beach in Clipper Cove in 2012. Elephant seal pups or juveniles also may strand after weaning in the spring and when they return to California in the fall (September through November).

Harbor Porpoise Density Estimates

Harbor porpoise density was calculated from all observations during SFOBB monitoring from 2000 to 2014. These observations included data from baseline, pre, during and post pile driving and onshore implosion activities. Over this period, the number of harbor porpoises that were observed entering and using the Bay increased. During the fifteen years of observational data around the SFOBB Project, only four harbor porpoises were observed and all occurred from 2006 to 2014 (including two in 2014). All harbor porpoise observations within a km^2 area were used in the estimate. Distances were recorded using a laser range finder (Bushnell Yardage Pro Elite 1500; ± 1.0 yards accuracy).

Table 5. Estimated in-water density of marine mammals that may occur in the Marine Mammal Exclusion Zone (MMEZ). Densities for harbor seals, California sea lions and harbor porpoises are based on monitoring for the East Span of the SFOBB from 2000 to 2013. Gray whale and elephant seal densities are estimated from sighting and stranding data from the MMC.

Species	**Main Season Of Occurrence**	**Density Within 1,200m of SFOBB (animals/km^2)**	**Density Beyond 1,200m of SFOBB (animals/km^2)**
Pacific Harbor Seal	Spring – Summer (pupping/molt seasons)	0.30	0.15
Pacific Harbor Seal	Fall- Winter	0.77	0.15
Sea Lion	Late Summer – Fall (Post Breeding Season)	0.12	0.12
Sea Lion	Late Spring-Early Summer (Breeding Season)	0.06	0.06
Northern Elephant seal	Late Spring-Early Winter (Pups After First Trip To Sea)	0.03	0.03
Harbor Porpoise	All Year	Very Low estimated at 0.004	Very Low estimated at 0.004

6. By Age, Sex, And Reproductive Condition (If Possible), The Number Of Marine Mammals (By Species) That May Be Taken By Each Type Of Taking Identified In Paragraph (A)(5) Of This Section, And The Number Of Times Such Takings By Each Type Of Taking Are Likely To Occur.

Behavioral Responses

Generally, a louder source of sound results in a more intense behavioral response. However, other factors such as the proximity of a sound source, type and frequency of the sound, and the animal's experience, motivation, and conditioning are also critical factors influencing the response (reviewed by Southall et al. 2007). The distance from the sound source and whether it is perceived as approaching or moving away can also affect the type and the intensity of the animal's response to a sound (Richardson et al. 1995, Wartzok et al. 2003, Nowacek et al. 2007; Southall et al. 2007). Behavioral responses can vary from a minor response (i.e., orientation to the sound or head movement) to a strong response (i.e., rapidly swimming away from the sound, abandonment of the area).

Most low-frequency cetaceans (i.e., mysticete) usually avoided sound sources at levels of 160 dB re 1 μPa (Richardson et al. 1995). Gray whales migrating along the U.S. west coast and in the Bering Sea showed avoidance responses to seismic vessels by 10 percent of animals at 164 dB re 1 μPa, and by 90 percent of animals at 190 dB re 1 μPa (Malme et al. 1986, 1988). In contrast, impact noise from seismic surveys was not found to impact feeding behavior or exhalation rates from resting or diving western gray whales off the coast of Russia (Gailey et al. 2007; Yazvenko et al. 2007). The behavior of baleen whales to loud sounds included avoidance of the sound (Malme et al, 1986, 1988), a decrease in surface intervals and breathing (Richardson et al. 1995), and changes in vocalizations rates or source level (Gordon and Moscrop 1996; Miller et al. 2000; Croll et al. 2002; Gordon et al. 2003, Southall et al. 2007). Seismic pulses caused blue whales to increase call production (Di Iorio and Clark 2010), although a blue whale stopped vocalizing and changed its travel direction within six miles (10 kilometer) of a seismic survey ship (McDonald et al. 1995).

Mid-frequency cetaceans, including sperm whales and bottlenose dolphins, may show no clear tendency in response to sound sources. Captive US Navy bottlenose dolphins sometimes vocalized after an exposure to impulsive sound from a seismic watergun (Finneran et al. 2002).

High-frequency cetaceans (e.g., harbor porpoises) exhibited changes in respiration and avoidance behavior when exposed to sounds between 90 and 140 dB re 1 μPa. Sperm whales in the Gulf of Mexico did not show any movement away from a seismic survey ship located approximately 2 to 7 nautical miles (3.7 to 13.0 kilometers) away (Madsen et al. 2006 and Miller et al. 2009).

Phocid seals showed avoidance reactions at or below 190 dB re 1 μPa (Richardson et al. 1995). Blackwell et al. (2004) observed that ringed seals exhibited little or no reaction to pile driving noise with mean underwater levels of 157 dB re 1 μPa and suggested that the seals had habituated to the noise. In contrast, captive California sea lions avoided sounds from an impulsive source at levels of 165-170 dB re 1 μPa (Finneran et al. 2003). Although noise was not necessarily a factor, harbor seals abandoned a haul-out site after was repeatedly disturbed by small boats (Allen et al. 1984).

Hearing Threshold Shifts (TTS and PTS)

The magnitude of TTS or permanent threshold shift (PTS) is dependent on the level of sound, frequency, and duration of the sound (Parvin et al. 2007). Recovery from TTS usually occurs within minutes to hours depending on the severity of the TTS exposure (Nachtigall et al. 2004; Finneran et al. 2005; Mooney et al. 2009). PTS has not been measured in marine mammals because of ethical concerns but it has been measure in terrestrial animals. For marine mammals, it has been assumed that PTS would occur at a level about 6 dB above the level that causes TTS.

Injury and Mortality

Injury from impulse sounds, including underwater implosions usually involve air filled cavities such as the lungs, gastro-intestinal tract, and nasal sinuses, as well as to the auditory system (Yelverton et al. 1973; Goertner 1982; Craig and Hearn 1998). Damage to the tissues of the brain may also occur (Knudsen and Øen 2003). Impulse injuries to the respiratory system may consist of lung contusions, collapsed lungs, air in the chest cavity between the lungs, traumatic lung cysts, or interstitial or subcutaneous emphysema (Phillips and Richmond 1990). The reinforced trachea, flexible thoracic cavity, and ability to deflate and re-inflate the lungs during diving (Kooyman et al. 1970; Ridgway and Howard 1979) may decrease the risk of lung injury when exposed to loud sounds or pressures in marine mammals. Additionally, the gastro-intestinal tract is more robust than lung tissues requiring higher pressures for tissue damage to occur here.

Mortality to fur seals occurred within 75.5 feet (23 meters) of a 24.25 pound (11kilogram) submerged dynamite charge (peak pressure of 530 psi [252 dB re 1μPa; reported in Parvin et al. 2007]). Sea otters were injured when exposed to peak pressures of 100 psi (236 db re 1μPa), and mortality occurred at peak pressures of 300 psi (246 dB re 1μPa) (reported in Parvin et al. 2007). Many marine mammals must quickly breathe when surfacing and undergo lung collapse during deep diving so lung injuries can be particularly debilitating or fatal. Mortalities to bottlenose dolphins have also occurred from underwater implosions associated with oil rig removal in the Gulf of Mexico (Klima et al. 1988) and to long-beaked common dolphins during Navy training in Southern California (Danil and St. Ledger 2011).

The number, and types, of exposure by species type from the Pier E3 implosion are presented in Table 6.

Species Impacts

Pacific Harbor Seal: The harbor seal would be the most vulnerable species to sounds or pressures originating from the Pier E3 implosion. They are the most numerous marine mammal in the Bay, and most likely to be in the area of the Pier E3. However, all of the observations made during monitoring for the SFOBB were of seals transiting through the Pier E3 area rather than remaining there to forage.

Table 6. Summary of the estimated exposures of marine mammals to the PierE3 implosion for each of the Level A, Level B, and mortality threshold criteria. Exposures are presented as whole number of animals exposed with the actual calculated value presented below.

Species	LEVEL B EXPOSURES		LEVEL A EXPOSURES*			Mortality*
	Behavioral Response	Temporary Threshold Shift	Permanent Threshold Shift	Gastro Intestinal Track Injury	Slight Lung Injury	
Pacific Harbor Seal	6 (5.923)	3 (3.443)	0 (0.148)	0 (0.001)	0 (0.008)	0 (0.002)
California Sea Lion	0 (0.026)	0 (0.010)	0 (0.003)	0 (0.001)	0 (0.009)	0 (0.003)
Northern Elephant Seal	1 (0.534)	0 (0.225)	0 (0.012)	0 (0.001)	0 (0.009)	0 (0.003)
Harbor Porpoise	1 (0.562)	0 (0.328)	0 (0.031)	0 (0.0004)	0 (0.0003)	0 (0.00008)
Total	**8**	**3**	**0**	**0**	**0**	**0**

* No implosion would occur if any marine mammal is within the Level A or mortality threshold criteria zones.

If a harbor seal remained undetected and entered the established marine mammal exclusion zone (MMEZ) during the implosion, it may be subject to slight lung, gastrointestinal (GI) track, and inner ear injury (PTS), or mortality. The use of active monitoring; however, will be implemented to ensure harbor seals at the surface are likely to be detected by observers. The long dive durations of harbor seals (generally up to 10 minutes with a maximum of 30 minutes) do suggest that an individual could swim through the established MMEZ without surfacing. To reduce this possibility, the implosion will be delayed if a harbor seal is observed within the MMEZ. The implosion will not proceed until the individual leaves the MMEZ, or at least 20 minutes have passed since the last observation.

Behavioral responses by harbor seals in response to the implosion may involve rapid movement away from the area and short-term abandonment of the area around Pier E3. Alternatively, seals foraging in the Coast Guard and Clipper Coves may continue foraging as they do during pile driving and mechanical demolition activities. Long-term abandonment of the Pier E3 area is not expected as SFOBB construction activity has been ongoing since 2003 with continued use of the area by harbor seals.

Based on the calculated density estimates, and the hydroacoustic modeling for the implosion, the Department estimates that nine harbor seals may be exposed to sound thresholds within the larger Level B Harassment Zone. Six of those exposures will be within the Level B behavioral response criteria threshold and three will be within the TTS threshold criteria. Due to the mitigation measures employed prior to the controlled implosion of Pier E3 (Section 13), and the monitoring

in place to detect harbor seals at the surface, no harbor seals are expected to be exposed to sound thresholds that would result in Level A PTS, lung or GI tract injury, or mortality exposure.

California Sea Lion: The California sea lion would be the second most vulnerable species to controlled implosion as they are the second most numerous marine mammal species in the Bay. They may occur in the Pier E3 area during the implosion. Similar to the discussion for harbor seals, California sea lions at the surface are likely to be detected by the observers during monitoring. Unlike harbor seals, sea lions are not long-duration divers and it is unlikely that a sea lion would swim through the MMEZ without surfacing and being detected. In addition, sea lions tend to spend more time at the surface while swimming than harbor seals. If a sea lion remained undetected and entered the established exclusion zone during the implosion, it may be subject to lung injury, GI tract injury, inner ear injury (PTS), or mortality Behavioral responses of sea lion to the controlled implosion would likely involve rapid movement away from the area and short-term abandonment of the Pier E3 area. As with harbor seals, long-term abandonment of the Pier E3 area by sea lions is not expected as construction activity has been ongoing since 2003 with continued use of the area.

Based on the calculated density estimates and the hydroacoustic modeling, the Department estimates that no sea lions will be exposed to the sound thresholds within the larger Level B Harassment Zone. Due to the mitigation measures employed prior to the controlled implosion of Pier E3 (Section 11) and the monitoring in place to detect sea lions at the surface, no sea lions are predicted to be exposed to sound thresholds that would result in Level A PTS, lung or GI tract injury, or mortality exposure.

Northern Elephant Seal: Northern elephant seals are infrequently found near Treasure Island and are unlikely to be in the area around Pier E3. Elephant seals at the surface are likely to be detected by the observers during monitoring prior to the controlled implosion. However, elephant seals are very long-duration divers, which suggests that an individual could swim through the MMEZ without surfacing. To reduce this possibility, the implosion will be delayed if an elephant seal is observed within the MMEZ. The implosion will not proceed until the individual leaves the MMEZ, or at least 20 minutes have passed since the last observation. If an elephant seal remained undetected and entered the established exclusion zone during the implosion, it may be subject to lung injury, inner ear injury, or mortality if it was within. Behavioral responses of elephant seals to the controlled implosion would likely involve rapid movement away from the area and short-term abandonment of the area around Pier E3. Long-term abandonment of the Pier E3 area by elephant seals is not expected as construction activity has been ongoing since 2003 with limited, continued use of the area for transit or resting.

Based on the calculated density estimates and the hydroacoustic modeling, the Department estimates that one elephant seal may be exposed to sound thresholds that fall within the larger Level B Harassment Zone. This one exposure would be within the Level B behavioral response Zone with no exposures in the TTS threshold Zone. Due to the avoidance and minimization measures that would be employed prior to the controlled implosion (Section 13) and the monitoring in place to detect elephant seals at the surface, no elephant seals are predicted to be exposed to sound thresholds that would result in Level A PTS, lung or GI tract injury, or mortality exposure.

Harbor Porpoises: Impacts to harbor porpoises are unlikely. This species rarely occurs in the area around Pier E3. Their common behavior of traveling in pods of several animals along with frequent surfacing events make it very likely that observers would detect any harbor porpoises in the MMEZ. If a harbor porpoise remained undetected and entered the established exclusion zone during the implosion, it may be subject to lung injury, inner ear injury, or mortality. Behavioral responses of harbor porpoises from the controlled implosion would likely be rapid movement away from the area and short term abandonment of the SFOBB area. Long-term abandonment is not expected as construction activity has been ongoing since 2003 with limited, continued use of the area for transit or foraging.

Based on the calculated density estimates and the hydroacoustic modeling, the Department estimates that one porpoise may be exposed to the sound thresholds that fall within the larger Level B Harassment Zone. This one exposure would be within the Level B behavioral response criteria with no exposure in the TTS threshold Zone. Due to the avoidance and minimization measures that would be employed prior to the controlled implosion (Section 13), and the monitoring in place to detect harbor porpoises at the surface, no individuals are predicted to be exposed to sound thresholds that would result in Level A PTS, lung or GI tract injury, or mortality exposure.

7. The Anticipated Impact of the Activity Upon The Species Or Stock.

The numbers presented in Table 6 represent estimated modeled exposures to each harassment threshold criteria zone under the MMPA. These calculated values are conservative (i.e., over predictive) estimates of harassment, that calculate exposure without taking into consideration avoidance and minimization measures that would be employed (i.e., marine mammal observers, real time acoustic monitoring, BAS, and acoustic deterrent devices). As a result of this analysis and through the implementation of avoidance and minimization measures, the Department concludes that the controlled implosion of Pier E3 would only result in Level B harassment of behavioral harassment or TTSs. Based on the best available science, exposures to marine mammal species and stocks due to the controlled implosion would result in only short-term effects to individuals exposed, would likely not affect annual rates of recruitment or survival, and employed mitigation measures will prevent any Level A exposures or mortality.

Based on 14 years of previous construction and demolition activities associated with the east span of the SFOBB, and the protective measures described, and the very short duration of the implosion, the Department believes there will be no permanent injury or mortality to animals, or impacts (short or long term) to the populations or stocks of marine mammals that regularly inhabit or occasionally enter the Bay.

8. The Anticipated Impact Of The Activity On The Availability Of The Species Or Stocks Of Marine Mammals For Subsistence Uses.

Non-Applicable, none of the species or stocks of marine mammals regularly found within San Francisco Bay are used for subsistence uses.

9. The Anticipated Impact Of The Activity Upon The Habitat Of The Marine Mammal Populations, And The Likelihood Of Restoration Of The Affected Habitat.

The removal of the east span of the SFOBB is not likely to negatively affect the habitat of marine mammal populations as there would be no permanent loss of habitat and only a minor, temporary modification of habitat from the hydroacoustic impacts of the controlled implosion. The SFOBB is not used as a haul-out site by pinnipeds and demolition of the concrete marine foundations is unlikely to permanently decrease fish populations.

10. The Anticipated Impact Of The Loss Or Modification Of The Habitat On The Marine Mammal Populations Involved.

The removal of Pier E3 through controlled implosion is not likely to negatively affect the habitat of marine mammal populations as there would be no loss of habitat and only a minor, temporary modification of habitat from the hydroacoustic impacts of the controlled implosion. The SFOBB is not used as a haul-out site by pinnipeds and demolition of the concrete marine foundations is unlikely to permanently decrease fish populations The physical effects from pressure waves generated by underwater impulse sounds (e.g., underwater implosions) would likely affect fish populations within the proximity of project activities. The abundance and distribution of fish near Pier E3 could be altered for a few hours after the implosion and before individual fish from surrounding areas repopulate the area. These fish populations, however, would be replenished as project activities cease and the local population mixes again.

11. The Availability And Feasibility (Economic And Technological) Of Equipment, Methods, And Manner Of Conducting Such Activity Or Other Means Of Effecting The Least Practicable Adverse Impact Upon The Affected Species Or Stocks, Their Habitat, And On Their Availability For Subsistence Uses, Paying Particular Attention To Rookeries, Mating Grounds, And Areas Of Similar Significance.

The methods proposed to demolish Pier E3 provide the least impact on marine mammal stocks and their habitat. A BAS will be used for all activities that produce impulse sounds, including controlled implosion. The use of controlled charges for demolition decreases the cumulative amount of marine habitat, and the individual marine mammals within this habitat, exposed to potentially harmful sound thresholds.

An analysis of the potential effects to marine mammals from the alternative use of mechanical methods to remove Pier E3 was completed and is presented in Appendix C. In summary, the analysis concluded that the cumulative area subject to Level B Behavioral Harassment would be much greater for mechanical removal of Pier E3, largely due to the increased time required for pile driving to install a cofferdam around Pier E3. The cumulative area exposed to Level B (TTS) or Level A (PTS or greater harm) Harassment of marine mammals is higher for the one-day controlled implosion (109 acres [44.1 hectares]) when compared at the 190 dB RMS threshold for pinnipeds (9.3 acres [3.8 hectares]) during cofferdam installation. However, for cetaceans (the 180 dB RMS threshold), cumulative exposure during pile driving would be approximately one and a half times the area of the controlled implosion scenario (147 acres [59.5 hectares] versus 109 acres [44.1 hectares]). The actual risk of Level A Harassment exposure to individual marine mammals from either demolition method is unlikely given the implementation of exclusion zones and monitoring. Exposure to Level B (TTS) Harassment of three harbor seals may occur from the controlled implosion. In contrast, the increased time (months to years) required to install the cofferdam, along with historical monitoring data, suggest there is a potential for equal, or greater, TTS exposure under this method. This could occur even with effective monitoring, because current regulations allow for continued pile driving if an individual enters the exclusion zone after work has commenced.

AVOIDANCE AND MINIMIZATION MEASURES

Blast Plan:

The Blast Plan presented in Appendix A is designed to meet Demonstration Project goals while minimizing, to the degree practical, the potential for unnecessary sound exposure to marine mammals. This is accomplished by using specific borehole patterns and the minimum required charge weights to fragment the pier while reducing harmful sound exposure. In addition, the Blast Plan describes a Marine Mammal Exclusion Zone (MMEZ), which will be monitored to ensure no individuals are subject to Level A Harassment or greater exposure.

Blast Attenuation System:

As described previously in this application, a BAS will be employed around Pier E3 during the implosion. Appendix B provides additional, technical information on various design elements of this system. BAS performance is anticipated to provide approximately 80% attenuation, or better,

of implosion-related pressure waves. This conclusion is based upon the performance of similar systems when used during similar underwater implosion events.

Monitoring Plan:

During the Pier E3 implosion, a project-specific monitoring plan (Section 13) will be employed to avoid the potential for individual exposure to Level A Harassment and to document the number and species potentially exposed to Level B Harassment. In particular, monitors will observe the MMEZ and delay the implosion if any individuals are within this zone.

Real Time Acoustic Monitoring:

While bottlenose dolphins and harbor porpoises are not expected to be within the Demonstration Project area in November, real time acoustic monitoring to confirm species absence is proposed as an additional avoidance measure to active monitoring by trained observers. Bottlenose dolphins and harbor porpoises vocalize frequently with other animals within their group, and use echolocation to navigate and locate prey. As an avoidance tool, a real time acoustic monitoring system will be used to detect this species. This proposed acoustic monitoring may provide additional benefits in detecting other cetaceans such as humpback, gray, and minke whales (unlikely to be in the Bay) that do not vocalize as often using the same monitoring system. The system would involve one bio-acoustician monitoring the site in real time. A calibrated hydrophone may be suspended from a boat or several sonobuoys deployed outside of the monitoring area of Pier E3. Though this system would not be able to give an accurate location for the observed animal, it would provide a relative distance and direction so that visual observers could search for the cetaceans and determine if those animals have entered or may enter the monitoring zone. The bio-acoustician would be in communication with the Lead MMO and would alert the crew to the presence of any cetacean approaching the monitoring area. This monitoring would also provide additional confirmation of species absence for cetaceans in the Pier E3 area, if the visual observations document that none are present.

12. Where The Proposed Activity Would Take Place In Or Near A Traditional Arctic Subsistence Hunting Area And/Or May Affect The Availability Of A Species Or Stock Of Marine Mammal For Arctic Subsistence Uses, The Applicant Must Submit Either A "Plan Of Cooperation" Or Information That Identifies What Measures Have Been Taken And/Or Will Be Taken To Minimize Any Adverse Effects On The Availability Of Marine Mammals For Subsistence Uses.

Non-Applicable, there will be no activities within Arctic subsistence hunting areas.

13. The Suggested Means Of Accomplishing The Necessary Monitoring And Reporting That Will Result In Increased Knowledge Of The Species, The Level Of Taking Or Impacts On Populations Of Marine Mammals That Are Expected To Be Present While Conducting Activities And Suggested Means Of Minimizing Burdens By Coordinating Such Reporting Requirements With Other Schemes Already Applicable To Persons Conducting Such Activity. Monitoring Plans Should Include A Description Of The Survey Techniques That Would Be Used To Determine The Movement And Activity Of Marine Mammals Near The Activity Site(S) Including Migration And Other Habitat Uses, Such As Feeding. Guidelines For Developing A Site-Specific Monitoring Plan May Be Obtained By Writing To The Director, Office Of Protected Resources.

Monitoring Plan

Monitoring for implosion impacts to marine mammals will be based on the SFOBB pile driving monitoring protocol. Pile driving has been conducted for the SFOBB construction project since 2000 with development of several NMFS-approved marine mammal monitoring plans (Department 2004; 2013a). Most elements of these marine mammal monitoring plans are similar to what would be required for underwater implosions. These monitoring plans would include exclusion and behavioral monitoring zones extending out to a pre-determined distance from Pier E3 depending on the hydroacoustic modeling of current NMFS acoustic threshold criteria.

The following are the general elements of the plan; a detailed monitoring plan would be developed, in cooperation with NMFS, as more specific information becomes available or modeling of the implosion effects are revised.

Marine Mammal Exclusion Zone - Level A Harassment/Injury or Mortality Zone: This will cover the area through both the mortality and Level A harassment zone (PTS, GI track injury, and slight lung injury), using the criteria threshold that extends out the furthest. Estimates are that the isopleth for PTS would extend out to a radius of 1,160 feet (354 meters) for pinnipeds to 5,800 feet (1,768 meters) for harbor porpoise; (Table 4) covering the entire areas for both Level A Harassment and Mortality (Figure 23). As harbor porpoises are unlikely to be in the area in November, the exclusion zone boundaries would be set around the calculated distance to Level A Harassment for pinnipeds, including harbor seals and sea lions. However, real-time acoustic monitoring (i.e., active listening for vocalizations with hydrophones) also will be utilized to provide an additional level of confidence that harbor porpoises are not in the affected area. Adherence to calculated distances to Level A Harassment for pinnipeds indicates that the radius of the MMEZ would be 1,160 feet (354 meters). The MMEZ will be monitored by marine mammal observers (MMOs) and if any marine mammals are observed inside the MMEZ, the implosion will be delayed until the animal leaves the area or at least 15 minutes have passed since the last observation for cetaceans and sea lions or 20 minutes for harbor and elephant seals.

Level B Harassment/TTS Zone: For harbor seals and sea lions, this will cover the area out to 212 dB peak SPL or 177 dB SEL, whichever extends out the furthest. Hydroacoustic modeling indicates this isopleth would extend out to 5,700 feet (1,737 meters) from Pier E3. For harbor porpoises, this will cover the area out to 195 dB peak SPL or 146 dB SEL, whichever extends out the furthest. Hydroacoustic modeling indicates this isopleth would extend out to 26,500 feet (8,077 meters) from Pier E3. As discussed previously, the presence of harbor porpoises in this area is

unlikely but monitoring (including real-time acoustic monitoring) will be employed to confirm their absence. For northern elephant seals, the distance to the Level B Harassment / TTS Zone will cover the area out to 212 dB peak SPL or 200 dB SEL. This distance was calculated at 470 feet (143 meters) from Pier E3, well within the MMEZ previously described. .

Level B Harassment/Behavioral Response Zone: For harbor seals and sea lions, this will cover the area out to 172 dB SEL. Hydroacoustic modeling indicates this isopleth would extend out to 9,700 feet (2,957 meters) from Pier E3. For harbor porpoises, this will cover the area out to 141 dB SEL. Hydroacoustic modeling indicates this isopleth would extend out to 44,500 feet (13,564 meters) from Pier E3. As discussed previously, the presence of harbor porpoises in this area is unlikely but monitoring (including real-time acoustic monitoring) will be employed to confirm their absence. For northern elephant seals, the distance to the Level B Harassment/Behavioral Response Zone will cover the area out to 195 dB SEL. This distance was calculated at 800 feet (244 meters) from Pier E3, well within the MMEZ previously described.

Marine Mammal Observers: A minimum of 8-10 MMOs would be required during the Pier E3 controlled implosion so that the MMEZ, Level B Harassment TTS/Behavioral Zones, and surrounding area can be monitored. The size of this area may be revised as further information is obtained regarding the amount of charges and from corresponding changes in the size of the Level A and Level B Harassment zones from hydroacoustic modeling. One MMO would be designated as the Lead MMO and would be located with the Department Engineer and the Blasting Supervisor (or person that will be in charge of detonating the charges) during the implosion. The Lead MMO would receive updates from other MMOs on the presence or absence of marine mammals within the MMEZ and would notify the Blasting Supervisor of a cleared MMEZ prior to the implosion.

Monitoring Protocol: Implosion of Pier E3 would only be conducted during daylight hours and with enough time for pre and post implosion monitoring, and with good weather (i.e., clear skies and no high winds). This would be completed to ensure that MMOs will be able to detect marine mammals within the MMEZ and beyond. The Lead MMO will be in contact with other MMOs and the acoustic monitors. As the time for the implosion approaches, any marine mammal sightings would be discussed between the Lead MMO, the Resident Engineer, and the Blasting Supervisor. If any marine mammals enter the MMEZ within 20 minutes of blasting, the Lead MMO will notify the Resident Engineer and Blasting Supervisor that the implosion may need to be delayed. The Lead MMO will keep them informed of the disposition of the animal. If the animal remains in the MMEZ, blasting will be delayed until it has left the MMEZ. If the animal dives and is not seen again, blasting will be delayed at least 15 minutes for a cetacean or sea lion, or 20 minutes for a harbor seal or elephant seal. Once the implosion has occurred, the MMOs will continue to monitor the area for at least 60 minutes.

Although any injury or mortality from the implosion of Pier E3 is very unlikely, boat or shore surveys will be conducted for the three days following the event to determine if there are any injured or stranded marine mammals in the area. If an injured or dead animal is discovered during these surveys or by other means, the NMFS-designated stranding team will be contacted to pick up the animal. Veterinarians will treat the animal or conduct a necropsy to attempt to determine if it stranded was a result of the Pier E3 implosion.

Data Collection: Each MMO will record their observation position, start and end times of observations, and weather conditions (sunny/cloudy, wind speed, fog, visibility). For each marine mammal sighting, the following will be recorded, if possible:

1. Species
2. Number of animals (with or without pup/calf)
3. Age class (pup/calf, juvenile, adult)
4. Identifying marks or color (scars, red pelage, damaged dorsal fin, etc.)
5. Position relative to Pier E3 (distance and direction)
6. Movement (direction and relative speed)
7. Behavior (logging [resting at the surface], swimming, spyhopping [raising above the water surface to view the area], foraging, etc.)
8. Duration of sighting or times of multiple sightings of the same individual

Communication: All MMOs will be equipped with mobile phones and a VHF radio as a backup. One person will be designated as the Lead MMO and will be in constant contact with the Resident Engineer on site and the blasting crew. The Lead MMO will coordinate marine mammal sightings with the other MMOs. MMOs will contact the other MMOs when a sighting is made within the MMEZ or near the MMEZ so that the MMOs within overlapping areas of responsibility can continue to track the animal and the Lead MMO is aware of the animal. If it is within 20 minutes of blasting and an animal has entered the MMEZ or is near it, the Lead MMO will notify the Resident Engineer and blasting crew. The Lead MMO will keep them informed of the disposition of the animal.

Figure 23. MMEZ Zone. Estimated pinniped mortality and Level A Marine Mammal Exclusion Zone (MMEZ; red line), TTS Level B zone (orange line) and Level B behavioral response zone (yellow line).

Stranding Plan: A stranding plan will be prepared in cooperation with the local NMFS-designated marine mammal stranding, rescue, and rehabilitation center. Although mitigation measures would likely prevent any injuries, preparations will be made in the unlikely event that marine mammals are injured. Elements of that plan would include the following:

1. The stranding crew would prepare treatment areas at the NMFS-designated facility for cetaceans or pinnipeds that may be injured from the implosion. Preparation would include equipment to treat lung injuries, auditory testing equipment, dry and wet caged areas to hold animals, and operating rooms if surgical procedures are necessary. Equipment to conduct auditory brainstem response hearing testing would be available to determine if any inner ear threshold shifts (TTS or PTS) have occurred (Thorson et al. 1999).
2. A stranding crew and a veterinarian would be on call near the Pier E3 site at the time of the implosion to quickly recover any injured marine mammals, provide emergency veterinary care, stabilize the animal's condition, and transport individuals to the NMFS-designated facility. If an injured or dead animal is found, NMFS (both the regional office and headquarters) will be notified immediately even if the animal appears to be sick or injured from other than blasting.
3. Post-implosion surveys would be conducted immediately after the event and over the following three days to determine if there are any injured or dead marine mammals in the area.
4. Any veterinarian procedures, euthanasia, rehabilitation decisions and time of release or disposition of the animal will be at the discretion of the NMFS-designated facility staff and the veterinarians treating the animals. Any necropsies to determine if the injuries or death of an animal was the result of the blast or other anthropogenic or natural causes will be conducted at the NMFS-designated facility by the stranding crew and veterinarians. The results will be communicated to both the Department and to NMFS as soon as possible with a written report within a month.

14. Suggested Means Of Learning Of, Encouraging, And Coordinating Research Opportunities, Plans, And Activities Relating To Reducing Such Incidental Taking And Evaluating Its Effects.

A Marine Mammal Monitoring Plan for pile driving and mechanical demolition was developed by the Department and submitted to NMFS in 2004 and a revised plan was submitted to NMFS in 2013. This plan provides information on the required monitoring methods as well as reporting requirements. An additional study of the removal of the cement bridge piers using implosion was submitted to NMFS in March 2014. The study provided detailed information on the use of implosion to remove the pier, estimated distances to the NMFS impulse sound criteria thresholds, and an expanded monitoring plan to further mitigate impacts to marine mammals.

15. List of Preparers

State Government

Stefan Galvez-Abadia,
Environmental Manager
California Department of Transportation
111 Grand Ave,
Oakland, CA 94612

Contractors

Lauren Bingham
Biologist / Permitting Specialist
Garcia and Associates
2601 Mission Street, Suite 600
San Francisco, CA 94110

Paul R. Donavan, Sc.D.
Illingworth & Rodkin, Inc.
Acoustics and Air Quality
1 Willowbrook Court, Suite 120
Petaluma, CA 94954

Jason Minton, M.S.
Wildlife Biologist
Garcia and Associates
1512 Franklin St., Suite 100
Oakland, CA 94612

Alex Pries, M.S.
Wildlife Biologist
Garcia and Associates
1512 Franklin St., Suite 100
Oakland, CA 94612

Philip Thorson, Ph.D.
Senior Marine Biologist
Garcia and Associates
2601 Mission Street, Suite 600
San Francisco, CA 94110

16. References

Allen, B.M. and R.P. Angliss. 2013. Alaska marine mammal stock assessments, 2012. U.S. Department of Commerce, NOAA Technical Memorandum. NMFSAFSC-245. 282 pp.

Allen, B.M. and R. P. Angliss. 2014. Alaska marine mammal stock assessments, 2013. U.S. Department of Commerce, NOAA Technical Memorandum. NMFSAFSC-277. 294 pp.

Antonelis, G.A., B.S. Stewart, and W.F. Perryman. 1990. Foraging characteristics of female northern fur seals (*Callorhinus ursinus*) and California sea lions (*Zalophus californianus*). Canadian Journal of Zoology. 68:150-158.

Barlow, J. and D. Hanan. 1995. An assessment of the status of harbor porpoise in central California. Reports of the International Whaling Commission. Special Issue 16:123-140.

Blackwell, S.B., J.W. Lawson and M.T. Williams. 2004. Tolerance by ringed seals (*Phoca hispida*) to impact pipe-driving and construction sounds at an oil production island. Journal of the Acoustical Society of America. 115:2346-2357.

California Department of Transportation (Department). 2001. Pile Installation Demonstration Project Marine Mammal Impact Assessment. Prepared for the Department by URS Corporation and Parsons Brinckerhoff.

Department. 2004. Marine mammal and acoustic monitoring for the eastbound structure. Prepared for the Department by SRS Technologies, Ilingworth & Rodkin, and Parsons Brinckerhoff.

Department. 2013a. Advanced Planning Study: San Francisco-Oakland Bay Bridge Pier E3 Demonstration Program. November 4, 2013.

Department. 2013b. Marine mammal monitoring during demolition of Foundation C3 on October 8 and 9, 2013. Prepared for the Department by Garcia and Associates.

Department. 2013c. Marine mammal monitoring during driving of temporary piles for the Tower 1 fenders, 2013. Prepared for the Department by Garcia and Associates.

Department. 2014. SFOBB Marine Mammal Incidental Harassment Authorization Annual Report January 8, 2013 –January 7, 2014. Prepared for the Department by Garcia and Associates. 22 pp.

Carretta, J.V., K.A. Forney, and S.R. Benson. 2009. Preliminary estimates of harbor porpoise abundance in California waters from 2002 to 2007. NOAA Technical Memorandum, NOAA-TM-NMFSSWFSC-435. 10 pp.

Carretta, J.V., K.A. Forney, E. Oleson, K. Martien, M.M. Muto, M.S. Lowry, J. Barlow, J. Baker, B. Hanson, D. Lynch, L. Carswell, R.L. Brownell Jr., J. Robbins, D.K. Mattila, K. Ralls, and Marie C. Hill. 2012. U.S. Pacific Marine Mammal Stock Assessments: 2011. U.S. Department of Commerce, NOAA Technical Memorandum, NMFS-SWFSC-488. 356 p.

Carretta, J.V., E. Oleson, D.W. Weller, A.R. Lang, K.A. Forney, J. Baker, B. Hanson, K. Martien, M.M. Muto, M.S. Lowry, J. Barlow, D. Lynch, L. Carswell, R.L. Brownell, D.K. Mattila, and M.C. Hill. 2013. U.S. Pacific Marine Mammal Stock Assessments: 2012. U.S. Department of Commerce, NOAA Technical Memorandum, NMFS-SWFSC-504. 378 p.

Carretta, J.V., E. Oleson, D.W. Weller, A.R. Lang, K.A. Forney, J. Baker, B. Hanson, K. Martien, M.M. Muto, A.J. Orr, H. Huber, M.S. Lowry, J. Barlow, D. Lynch, L. Carswell, R.L. Brownell, and D.K. Mattila. 2014. U.S. Pacific Marine Mammal Stock Assessments: 2013. U.S. Department of Commerce, NOAA Technical Memorandum, NMFS-SWFSC-532. 414 pp.

City and County of San Francisco Planning Department. 2010. Treasure Island and Yerba Buena Island Redevelopment Plan. Case No. 2007-0903E.

Cole, R.H. 1948. Underwater Explosions. Princeton University Press. Princeton, New Jersey.

Craig, J.C. and C.W. Hearn. 1998. Appendix D. Physical impacts of explosions on marine mammals and turtles Final Environmental Impact Statement on Shock Testing of the Seawolf Submarine (pp. D1-D41). North Charleston, South Carolina: Department of the Navy.

Croll, D.A., C.W. Clark, A. Acevedo, B. Tershy, S. Flores, J. Gedamke, and J. Urban. 2002. Bioacoustics: Only male fin whales sing loud songs. Nature. 417:809-809.

Cummings, W.C. and P.O. Thompson. 1971. Gray whales, *Eschrichtius robustus*, avoid the underwater sounds of killer whales, Orcinus orca. Fishery Bulletin. 69:525-530.

Danil, K., and J.A. St. Leger. 2011. Seabird and dolphin mortality associated with underwater detonation exercises. Marine Technology Society Journal. 45(6):89-95.

De Rango, G. 2013. Personal Communication, Stranding Coordinator, The Marine Mammal Center, Sausalito, CA.

Di Iorio L. and C.W. Clark. 2010. Exposure to seismic survey alters blue whale acoustic communication. Biology Letters. 6:51-54.

Dudzik, K.J., K.M. Baker, and D.W. Weller. 2006. Mark-recapture abundance estimate of California coastal stock bottlenose dolphins: February 2004 to April 2005. SWFSC Administrative Report LJ-06-02C, available from Southwest Fisheries Science Center, La Jolla, CA 92037. 15p.

Eguchi,T. and J.T. Harvey. 2005. Diving behavior of the Pacific harbor seal (*Phoca vitulina richardii*) in Monterey Bay, California. Marine Mammal Science. 21:283-295.

Feinholz, D.M. 1996. Pacific coast bottlenose dolphins (*Tursiops truncatus*) in Monterey Bay, California. M.S. Thesis, San Jose State University, San Jose, CA. 78p.

Feldkamp, S.D., R.L. DeLong, and G.A. Antonelis. 1989. Diving patterns of California sea lions, *Zalophus californianus*. Canadian Journal of Zoology. 67:872-883.

Finneran, J. J., C.E. Schlundt, R. Dear, D.A. Carder, and S.H. Ridgway. 2002. Temporary shift in masked hearing thresholds in odontocetes after exposure to single underwater impulses from a seismic watergun. Journal of the Acoustical Society of America. 111, 2929–2940.

Finneran, J.J., R. Dear, D.A. Carder, and S.H. Ridgway. 2003. Auditory and behavioral responses of California sea lions (*Zalophus californianus*) to single underwater impulses from an arc-gap transducer. Journal of the Acoustical Society of America. 114:1667-1677.

Finneran, J.J., D.A. Carder, C.E. Schlundt, and S.H. Ridgway. 2005. Temporary threshold shift in bottlenose dolphins (*Tursiops truncatus*) exposed to mid-frequency tones. Journal of the Acoustical Society of America. 118:2696-2705.

Finneran, J.J. and D.S. Houser. 2006. Comparison of in-air evoked potential and underwater behavioral hearing thresholds in four bottlenose dolphins (*Tursiops truncatus*). Journal of the Acoustical Society of America, 119, 3181-3192.

Gailey, G., B. Würsig and T.L. McDonald. 2007. Abundance, behavior, and movement patterns of western gray whales in relation to a 3-D seismic survey, Northeast Sakhalin Island, Russia. Environmental Monitoring and Assessment. 134:75-91.

Gjertz I, C. Lydersen, and Ø. Wiig. 1991. Distribution and diving of harbour seals (*Phoca vitulina*) in Svalbard.Polar Biology. 24:209-214.

Goertner, J.F. 1982. Prediction of underwater explosion safe ranges for sea mammals. NSWC TR 82-188 Naval Surface Weapons Center, Dahlgren Division, White Oak Detachment, Silver Spring, MD).

Gordon, J. and A. Moscrop. 1996. Underwater noise pollution and its significance for whales and dolphins. In Conservation of whales and dolphins: 281–319. Simmonds, M. P. and Hutchinson, J. D. (Eds).

Gordon, J., D. Gillespie, J. Potter, A. Frantzis, M.P. Simmonds, R. Swift, and D. Thompson. 2003. A review of the effects of seismic surveys on marine mammals. Marine Technology Society Journal. 37:16-34.

Grigg, E.K., D.E. Green, S.G. Allen, and H. Markowitz. 2002. Nocturnal and diurnal haul-out patterns of harbor seals (*Phoca vitulina richardsi*) at Castro Rocks, San Francisco Bay, California. California Fish and Game. 88:15–27.

Gulland, F.M.D., F.B. Nutter, K. Dixon, J. Calambokidis, G. Schorr, J. Barlow, T. Rowles, S. Wilkin, T. Spradlin, L. Gage, J. Mulsow, C. Reichmuth, M. Moore, J. Smith, P. Folkens, S.F. Hanser, S. Jang, and C.S. Baker. 2008. Health assessment, antibiotic treatment, and behavioral responses to herding efforts of a cow-calf pair of humpback whales (*Megaptera novaeangliae*) in the Sacramento River Delta, California. Aquatic Mammals. 34:182-192.

Hanggi, E.B. and R.J. Schusterman. 1994. Underwater acoustic displays and individual variation in male harbour seals, *Phoca vitulina*. Animal Behaviour. 48:1275-1283.

Hansen, L.J. and R.H. Defran. 1990. A comparison of photo-identification studies of California coastal bottlenose dolphins. Report of the International Whaling Commision. Special Issue 12:101-104.

Harvey, J.T. and D. Goley. 2011. Determining a correction factor for aerial surveys of harbor seals in California. Marine Mammal Science. 27:719–735.

Heath, C.B., and W.F. Perrin. 2008. California, Galapagos and Japanese Sea Lions *Zalophus californianus*, *Z. wollebaeki* and *Z. japonicus*. In Perrin, W.F.; B. Würsig, J.G.M. Thewissen. Encyclopedia of Marine Mammals (2nd ed.). Pp. 170–75.

Houser, D.S. and J.J. Finneran. 2006. A comparison of underwater hearing sensitivity in bottlenose dolphins (*Tursiops truncatus*) determined by electrophysiological and behavioral methods. Journal of the Acoustical Society of America. 120:1713-1722.

Huber, H.R., S.J. Jeffries, R.F. Brown, R.L. DeLong and G. VanBlaricom. 2001. Correcting aerial survey counts of harbor seals (*Phoca vitulina richardsi*) in Washington and Oregon. Marine Mammal Science. 17:276–293.

Jefferson, T.A., S. Leatherwood, and M.A. Webber. 1993. FAO species identification guide. Marine mammals of the world. Rome: Food and Agriculture Organization of the United Nations.

Kastak, D. and R.J. Schusterman. 1998. Low-frequency amphibious hearing in pinnipeds: methods, measurements, noise, and ecology. Journal of the Acoustical Society of America. 103:2216-2228.

Kastak, D., R.J. Schusterman, B.L. Southall, and C.J. Reichmuth. 1999. Underwater temporary threshold shift induced by octave-band noise in three species of pinniped. Journal of Acoustical Society of America. 106:1142-1148.

Kastak, D., and R.J. Schusterman. 2002. Changes in auditory sensitivity with depth in a freediving California sea lion (*Zalophus californianus*). Journal of the Acoustical Society of America. 112:329-333.

Kastelein, R., P. Bunskoek, M. Hagedoorn, W.W.L. Au, and D. de Haan. 2002. Audiogram of a harbor porpoise (*Phocoena phocoena*) measured with narrow-band frequency-modulated signals. Journal of the Acoustical Society of America. 112:334-344.

Keener, I. Sczepaniack, J. Stern, M. Webber. 2012. Harbor porpoises of the San Francisco Bay. Report of the Golden Gate Cetacean Research.

Ketten, D.R. 1998. Marine Mammal Auditory Systems: A Summary of Audiometric and Anatomical Data and its Implications for Underwater Acoustic Impacts. NOAA Technical Memorandum. La Jolla, CA. September.

Klima, E.F., G.R., Gitschlag, and M.L. Renaud. 1988. Impacts of explosive removal of offshore petroleum platforms on sea turtles and dolphins. Marine Fisheries Review. 50:33-42.

Knudsen, S.K. and E.O. Øen. 2003. Blast-induced neurotrauma in whales. Neuroscience Research. 46:377-386.

Kooyman, G.L., D.D. Hammond, and J.P. Schroeder. 1970. Bronchograms and tracheograms of seals under pressure. Science. 169:82-84.

Laake, J.L., J. Calambodkidis, S.D. Osmek, and D.J. Rugh. 1997. Probability of detecting harbor porpoise from aerials surveys: estimating g(0). Journal of Wildlife Management. 61:63-75.

Laake, J., A. Punt, R. Hobbs, M. Ferguson, D. Rugh, and J. Breiwick. 2009. Re-analysis of gray whale southbound migration surveys 1967-2006. U.S. Dep. Commerce. NOAA Tech. Memo. NMFS-AFSC-203, 55 p.

Lander, M. 1999. Personal Communication. Research Assistant at Moss Landing Marine Laboratory.

Le Boeuf, B.J., P.A. Morris, S.D. Blackwell, D.E. Crocker, and D.P. Costa. 1996. Diving behavior of juvenile northern elephant seals. Canadian Journal of Zoology. 74:1632-1644.

London, J.M., J.M. Ver Hoef, S.J. Jeffries, M.M. Lance, and P.L. Boveng. 2012. Haul-out behavior of harbor seals (*Phoca vitulina*) in Hood Canal, Washington. Plus One. 7(6):e38180.

Lowry, M.S., P. Boveng, R.J. DeLong, C.W. Oliver, B.S. Stewart, H. DeAnda, and J. Barlow. 1992. Status of the California sea lion (*Zalophus californianus californianus*) population in 1992. Admin. Rep. LJ-92-32. Southwest Fisheries Science Center, National Marine Fisheries Service, La Jolla, CA 92038. 34 pp.

Lowry, M.S. and J.V. Carretta. 2003. Pacific harbor seal, *Phoca vitulina richardii*, census in California during May-July 2002. NOAA Technical Memorandum NMFS, NOAATM-NMFS-SWFSC-353. 55 pp.

Lowry, M.S. and K.A. Forney. 2005. Abundance and distribution of California sea lions (*Zalophus californianus*) in central and northern California during 1998 and summer 1999. Fisheries Bulletin. 103:331-343.

Lowry, M.S., J.V. Carretta, and K.A. Forney. 2008. Pacific harbor seal census in California during May-July 2002 and 2004. California Fish and Game. 94:180-193.

Lowry, M.S., R. Condit, B. Hatfield, S.G. Allen, R. Berger, P.A. Morris, B.J. Le Boeuf and J. Reiter. 2010. Abundance, distribution, and population growth of the northern elephant seal (*Mirounga angustirostris*) in the United States from 1991 to 2010. Aquatic Mammals. 40:20-31.

Lucke, K., U. Siebert, P.A. Lepper, and M.-A. Blanchet. 2009. Temporary shift in masked hearing thresholds in a harbor porpoise (*Phocoena phocoena*) after exposure to seismic airgun stimuli. Journal of the Acoustical Society of America. 125:4060–4070.

Malme, C.I., B. Wursig, J.E. Bird, and P.L. Tyack. 1986. Behavioral responses of gray whales to industrial noise: Feeding observations and predictive modeling, National Oceanic and Atmospheric Administration, Outer continental Shelf Environmental Assessment Program, Final Report of the Principal Investigators, Anchorage, Alaska: BBB Report No. 6265. OCS Study MMS 88-0048; NTIS PB88-249008.

Malme, C.I., B. Wursig, J.E. Bird, and P. Tyack. 1988. Observations of feeding gray whale responses to controlled industrial noise exposure W.M. Sackinger, M.O. Jeffries, J.L. Imm, and S.D. Tracey (Eds.), Port and Ocean Engineering Under Arcitc Conditions (Vol. 2, pp. 55-73). Fairbanks, AK: Geophysical Institute, Unversity of Alaska.

Manugian, S. 2013. Survival and movement of female harbor seals (*Phoca vitulina*) in San Francisco and Tomales Bays, California. Masters's Thesis. Moss Landing Marine Laboratory. 107 pp.

Marine Mammal Center. 2002. Web site for the Marine Mammal Center, Sausalito, CA. http://www.marinemammalcenter.org/

Madsen, P.T., M. Johnson, P.J. Miller, N. Aguilar Soto, J. Lynch, and P. Tyack. 2006. Quantitative measures of air-gun pulses recorded on sperm whales (*Physeter macrocephalus*) using acoustic tags during controlled exposure experiments. Journal of the Acoustical Society of America. 120:2366-2379.

Melin, S.R., R.L. De Long, and D.B. Siniff. 2008. The effects of El Niño on the foraging behavior of lactating California sea lions (*Zalophus californianus californianus*) during the nonbreeding season. Canadian Journal of Zoology. 86:192-206.

Merkel & Associates, Inc. 2008. Eelgrass Habitat Surveys for the Emeryville Flats and Clipper Cover, Yerba Buena Island, San Francisco – Oakland Bay Bridge East Span Seismic Safety Project (October 1999-2005, and 2007).

Miller, P.J.O., N. Biassoni, A. Samuels, and P.L. Tyack. 2000. Whale songs lengthen in response to sonar. Nature. 405:903.

Miller, P.J.O., M.P. Johnson, P.T. Madsen, N. Biassoni, M. Quero, and P.L. Tyack. 2009. Using at-sea experiments to study the effects of airguns on the foraging behavior of sperm whales in the Gulf of Mexico. Deep-Sea Research I. 56:1168-1181.

Møhl, B. 1968. Auditory sensitivity of the common seal in air and water. Journal of Auditory Research. 8:27-38.

Mooney, T.A., P.E. Nachtigall, M. Breese, S. Vlachos, and W.W.L. Au. 2009. Predicting temporary threshold shifts in a bottlenose dolphin (*Tursiops truncatus*): The effects of noise level and duration. Journal of the Acoustical Society of America. 125:1816-1826.

Nachtigall, P.E., A. Ya. Supin, J.L., Pawloski, and W.W.L. Au. 2004. Temporary threshold shifts after noise exposure in the bottlenose dolphin (*Tursiops truncatus*) measured using auditory evoked potentials. Marine Mammal Science. 20:673-687.

Nedwell, J. and Thandavamoorthy, T. 1992. The Waterborne Pressure Wave from Buried Explosive Charges: an Experimental Investigation. Applied Acoustics 37: 1-14.

NOAA. 2013. Endangered and Threatened Species; Delisting of the Eastern Distinct Population Segment of Steller Sea Lion Under the Endangered Species Act; Amendment to Special Protection Measures for Endangered Marine Mammals; Final Rule 50 CFR Parts 223 and 224. Vol. 78, November 4, 2013, pp. 66140-66199.

Nowacek, D., L.H. Thorne, D. Johnston, and P. Tyack. 2007. Responses of cetaceans to anthropogenic noise. Mammal Review. 37:81-115.

Oriard, L.L. 2002. Explosives Engineering, Construction Vibrations and Geotechnology. International Society of Explosives Engineers.

Parvin, S.J., J.R. Nedwell, and E. Harland. 2007. Lethal and physical injury of marine mammals, and requirements for Passive Acoustic Monitoring. Subacoustech Report Reference: 565R0212, February 2007, To UK Government Department of Business, Enterprise and Regulatory Reform, 1 Victoria Street, London, SW1H 0ET.

Patterson, J. and A. Acevedo-Gutiérrez. 2008. Tidal influence on the haul-out behavior of harbor seals (*Phoca vitulina*) at a site available at all tide levels. Northwestern Naturalist. 89:17-23.

Phillips, Y.Y. and D. Richmond. 1990. Primary blast injury and basic research: a brief history. In: Zatchuck, R., Jenkins, D.P., Bellamy, R.F., Quick, C.M. (Eds.), Textbook of Military Medicine. Part I. Warfare, Weapons, and the Casualty, Vol. 5, Conventional Warfare. Ballistic, Blast, and Burn Injuries. TMM Publications, Washington DC, pp. 221/240.

Punt, A.E., and P.R. Wade. 2010. Population status of the eastern North Pacific stock of gray whales in 2009. U.S. Dep. Commer. NOAA Tech. Memo. NMFS-AFSC-207, 43 p.

Read, A.J. 1990. Reproductive seasonality in harbor porpoises, *Phocoena phocoena*, from Bay of Fundy. Canadian Journal of Zoology. 68:284-288.

Read, A.J. and A.A. Hohn. 1995. Life in the fast lane: the life history of harbor porpoises from the Gulf of Maine. Marine Mammal Science. 11:423-440.

Richardson, W.J., C.R. Greene, C.I. Malme and D.H. Thomson. 1995. Marine Mammals and Noise. Academic Press. San Diego, CA.

Ridgway S.H. and R. Howard. 1979. Dolphin lung collapse and intramuscular circulation during free diving: evidence from nitrogen washout. Science. 206:1182–1183.

Rickman, D. R. 2000. Analysis of Water Shock Data and Bubble Screen Effectiveness on the Blast Effect Mitigation Test Series, Wilmington Harbor, North Carolina", ERDC/SL TR-00-4, US Army Corps of Engineers, Engineer Research and Development Center, Vicksburg, MS, August 2000.

Riedman, M. 1990. The Pinnipeds: Seals, Sea Lions, and Walruses. University of California Press, Berkeley, CA.

Rivey, G., 2011. Evaluation of Practical Methods for Deconstructing SFOBB Piers. Letter Report, Rivey Associates, Inc., Parker Colorado, October 2011.

Rude, G. 2002. Properties of underwater shockwaves and how they are affected by a bubble screen: Briefing note. Unpublished manuscript, Department of National Defense, Suffield Alberta, Canada, February 2002

Rude, G and J. Lee. 2007. Performance evaluation of the Roach Cove bubble screen apparatus. Technical Memorandum 2007-046, Defense Research & Development Canada – Suffield, April 2007.

Schusterman, R.J. 1969. Underwater barking by male sea lions (*Zalophus californianus*). Nature. 1179-1180.

Schusterman, R., 1974, Auditory sensitivity of a California sea lion to airborne sound, Journal of the Acoustical Society of America. 56:1248–1251

Schusterman, R.J.; R. Gentry, and J. Schmook. 1966. Underwater Vocalization by Sea Lions: Social and Mirror Stimuli. Science. 154: 540–542.

Schusterman, R.J., R. Gentry, and J. Schmook. 1967. Underwater sound production by captive California sea lions. Zoologica. 52:21-24.

Schusterman, R.J., R.F. Balliet, and J. Nixon. 1972. Underwater audiogram of the California sea lion by the conditioned vocalization technique. Journal of the Experimental Analysis of Behavior. 17:339-350.

Southall, B.L., A.E Bowles, W.T. Ellison, J. Finneran, R. Gentry, C.R. Green, D. Kastak, D.R. Ketten, J.H. Miller, P.E. Nachtigall, W.J. Richardson, J.A. Thomas, and P.L. Tyack. 2007. Marine mammal noise exposure criteria. Aquatic Mammals. 33:411–521.

Stewart, B.S. and P.K. Yochem. 1994. Ecology of harbor seals in the Southern California Bight. W.L. Halverson and G.J. Maender (Ed.), The Fourth California Islands Symposium: Update on the status of resources. Santa Barbara, California: Santa Barbara Museum of Natural History. Pp 123-134.

Stewart, B.S. 1989. The ecology and population biology of the northern elephant seal, *Mirounga angustirostris* (Gill) 1866, on the southern California Channel Islands. Ph.D. dissertation, University of California, Los Angeles.

Stewart, B.S., and R.L. DeLong. 1995. Double migrations of the northern elephant seal, *Mirounga angustirostris*. Journal of Mammalogy. 76:196-205

Terhune, J.M. 1968. Detection thresholds of a harbour seal to repeated underwater high frequency, short duration sinusoidal pulses. Canadian Journal of Zoology. 66:1578-1582.

Terhune, J. and S. Turnbull. 1995. Variation in the psychometric functions and hearing thresholds of a harbour seal. Pages 81-93 in Kastelein, R.A., J.A. Thomas, and P. E. Nachtigall, eds. Sensory Systems of Aquatic Mammals. De Spil Publishers: Woerden, The Netherlands.

Thorson, P.H. and B.J. Le Boeuf. 1994. Developmental aspects of diving in northern elephant seal pups. In Elephant seals: population ecology, behavior, and physiology. Edited by B.J. Le Boeuf and R.M. Laws. University of California Press, Berkeley. Pp. 271-289.

Thorson, P.H., J.K. Francine, E.A. Berg, L.E. Meyers, and D.A. Eidson. 1999. Acoustic measurement of the 22 May 1999 Titan IV B-12 launch and quantitative analysis of auditory and behavioral responses for selected pinnipeds on Vandenberg Air Force Base and San Miguel Island, Ca. SRS Technologies technical report submitted to the National Marine Fisheries Service and the United States Air Force. 42 pp.

Thorson, P.H. and K. Wagner. 2001. Marine Mammal Monitoring of the San Francisco-Oakland Bay Bridge pile Installation Demonstration Project: September-December 2000. Prepared for the California Department of transportation, Contract No. 04-12084.

United States Army Corps of Engineers (USACE). 1964. Shock-Wave Attenuation Properties of a Bubble Screen (U), Technical Report No. 2-564, US Army Engineer Waterways Experiment Station, Corps of Engineers, Vicksburg, Mississippi, April 1964.

United States Army Corps of Engineers (USACE). 1991. Engineering and Design: Underwater Blast Monitoring. Technical Letter No. 1110-8-11(FR), U.S. Army Corps of Engineers, Washington, DC, July 15, 1991.

Van Parijs, S.M., P.J. Corkeron, J. Harvey, S.A. Hayes, D.K. Mellinger, P.A. Rouget, P.M.Thompson, M. Wahlberg, and K M. Kovacs. 2003. Patterns in the vocalizations of male harbor seals. Journal of the Acoustical Society of America.113:3403-3410.

Verboom, W. C. and Kastelein, R. A. 1995. Acoustic signals by harbour porpoises (*Phocoena phocoena*). In Harbour Porpoises – Laboratory Studies to Reduce Bycatch (ed. P. E. Nachtigall, J. Lien, W. W. L. Au and A. J. Read), pp. 1-39. Woerden, The Netherlands: De Spil Publishers.

Wartzok, D., A.N. Popper, J. Gordon, and J. Merrill. 2003. Factors affecting the responses of marine mammals to acoustic disturbance. Marine Technology Society Journal. 37:6-15.

Westgate, A.J., A.J. Read, P. Berggren, H.N. Koopman, and D.E. Gaskin. 1995. Diving behaviour of harbour porpoises, *Phocoena phocoena*. Canadian Journal of Fisheries and Aquatic Science. 52:1064-1073.

Wolski, L.F., R.C. Anderson, A.E. Bowles, and P.K. Yochem. 2003. Measuring hearing in the harbor seal (*Phoca vitulina*): Comparison of behavioral and auditory brainstem response techniques. Journal of the Acoustical Society of America. 113:629-637.

Yazvenko, S.B., T.L. McDonald, S.R. Blokhin, S.R. Johnson, H.R. Melton, MW. Newcomer, R.M. Nielson and P.W. Wainwright. 2007. Feeding of western gray whales during a seismic survey near Sakhalin Island, Russia. Environmental Monitoring and Assessment. 134:93-106.

Yelverton, J.T., D.R. Richmond, E.R. Fletcher, and R.K. Jones. 1973. Safe distances from underwater explosions for mammals and birds. Report by Lovelace Foundation for Medical Education and Research, Albuquerque, NM for Defense Nuclear Agency, Washington, DC. DNA 3114T. 67 pp.

Yochem, P.K., B.S. Stewart, R.L. DeLong, and D.P. DeMaster. 1987. Diel haul-out patterns and site fidelity of harbor seals (*Phoca vitulina richardsi*) on San Miguel Island, California, in Autumn. Marine Mammal Science. 3:323-332.

APPENDIX A: Pier E3 Blast Plan

San Francisco-Oakland Bay Bridge East Span Seismic Safety Project

Pier E3 Demonstration Project
Blast Plan

Prepared by Contract Drilling & Blasting LLC for the California Department of Transportation

SCOPE OF WORK

The removal of Pier E3 of the original east span of the San Francisco Oakland Bay Bridge (SFOBB) will require a combination of conventional and controlled implosion demolition techniques. Conventional methods will be used to remove the fender system and the top section of the pier to approximately elevation +9 (NGVD29). Once this phase is complete, a work platform will be constructed on top of the exposed wall system of the pier. This platform will allow for the placement of a drilling rig(s) on top of the pier and provide a safe working area for personnel during drilling operations and explosives loading operations. The platform will also serve as cover to prevent any concrete from being ejected into the air during the blast event. Additional wire rope blast mats will be used to curtain the sides of the structure exposed above water. Vertical drilling of the required bore holes will be conducted to allow for the placement of explosives in the designed locations. Once drilling has been completed, the drill rig will be removed from the pier. On a pre-determined date, explosives will be brought to the pier and loading operations will begin. Once the loading of charges has been completed, the initiation circuit from hole to hole will be completed in accordance with the designed sequence and tested to ensure all holes will fire. To facilitate this, electronic detonators will be used to allow for accurate programming of firing times and to provide information back to the programmer that they are “ready”. As an additional safety measure to ensure detonation of all explosives, all decks/holes will have two active detonators for redundancy. Loading operations will be planned to allow for the shot to be ready to blast at the following high slack tide. Once the final blast preparations have been completed and all required attenuation systems, monitoring equipment, and personnel are in place the marine blast safety zone will be secured. Traffic on the new east span will then be stopped, warning signals will be sounded, and the blast detonated. The blaster will do a visual check of post blast conditions and then give the “all clear” signal allowing traffic to resume on the new east span and Project personnel to re-enter the blast zone.

Design Considerations

The following site conditions have been taken into consideration while developing the blast design for Pier E3;

1) The condition of the existing pier.
2) The proximity of the new bridge components.
3) The proximity of utilities.
4) Water depths.
5) The Bay bottom elevations and limits of removal.
6) Structures adjacent to the site.
7) Marine life in the immediate area.
8) Environmental concerns.

The blast design has addressed these factors. Hole patterns and the weight of explosives detonated per delay have been designed to minimize any detrimental effects while fragmenting the pier sufficiently.

DIST	COUNTY	ROUTE	POST MILES TOTAL PROJECT	SHEET No.	TOTAL SHEETS
04	SF,Ala	80			

REGISTERED CIVIL ENGINEER X DATE

PLANS APPROVAL DATE

REGISTERED PROFESSIONAL ENGINEER YONG PIL KIM No. C48365 Exp. 06-30-16 CIVIL STATE OF CALIFORNIA

The State of California or its officers or agents shall not be responsible for the accuracy or completeness of electronic copies of this plan sheet.

DRAFT COPY

LEGEND:

Indicates existing

Indicates removal limit (top portion only) 1 foot below mudline (Typ)

Indicates removed by others (another contract)

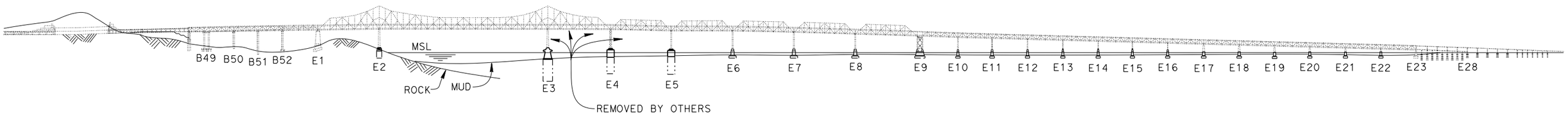

ELEVATION

1"=400'

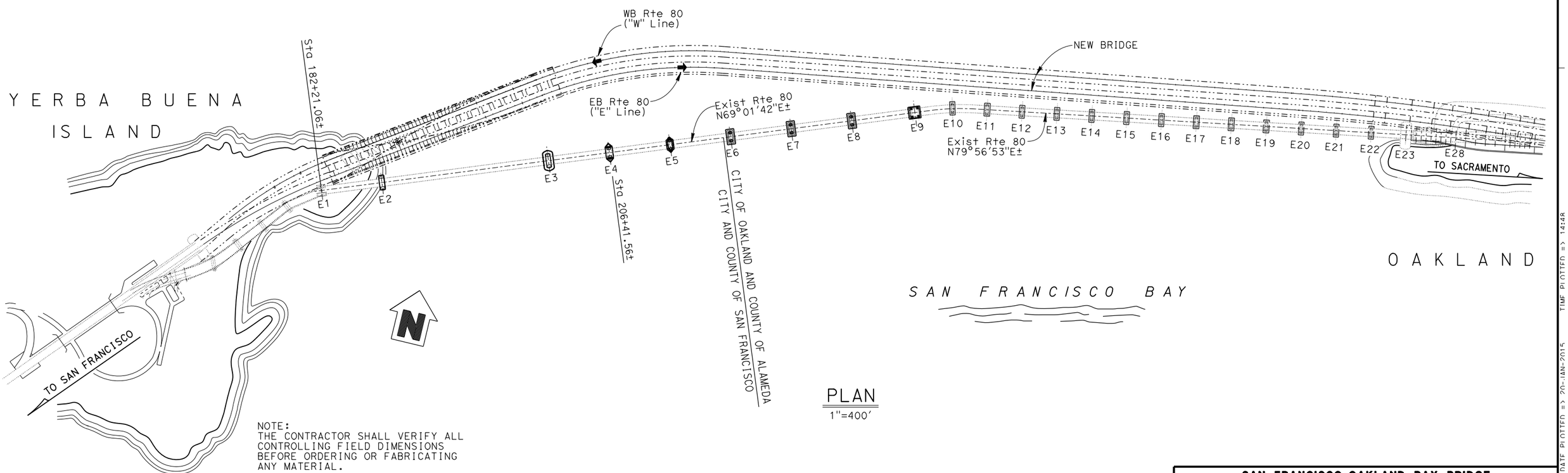

PLAN

1"=400'

NOTE:
THE CONTRACTOR SHALL VERIFY ALL CONTROLLING FIELD DIMENSIONS BEFORE ORDERING OR FABRICATING ANY MATERIAL.

BRIAN MORI
DESIGN ENGINEER

	BY	CHECKED			
DESIGN	Yong Pil Kim		LOAD & RESISTANCE FACTOR DESIGN		
DETAILS	Carlo Cancino		LAYOUT	Yong Pil Kim	
QUANTITIES			SPECIFICATIONS	X	PLANS AND SPECS COMPARED X

ORIGINAL SCALE IN INCHES FOR REDUCED PLANS 0 1 2 3

STATE OF CALIFORNIA
DEPARTMENT OF TRANSPORTATION

DIVISION OF ENGINEERING SERVICES
STRUCTURE DESIGN
DESIGN BRANCH 8

BRIDGE NO. 33-0025
POST MILE 8.6/1.2

UNIT: 3593
PROJECT NUMBER & PHASE: 0412000609, 1
CONTRACT NO.: 04-013531

DISREGARD PRINTS BEARING EARLIER REVISION DATES

REVISION DATES 01-20-15

SHEET 1 OF 4

SAN FRANCISCO-OAKLAND BAY BRIDGE
EAST SPAN SEISMIC SAFETY PROJECT

PIER E3 REMOVAL

GENERAL PLAN

STRUCTURES DESIGN GENERAL PLAN SHEET (ENGLISH) (REV.09-01-10)

FILE => 33-0025-s-gp.dgn

USERNAME => s134003 DATE PLOTTED => 20-JAN-2015 TIME PLOTTED => 14:48

DIST	COUNTY	ROUTE	POST MILES TOTAL PROJECT	SHEET No	TOTAL SHEETS
.	.	.			

REGISTERED CIVIL ENGINEER DATE

PLANS APPROVAL DATE

REGISTERED PROFESSIONAL ENGINEER NO. EXP. CIVIL STATE OF CALIFORNIA

The State of California or its officers or agents shall not be responsible for the accuracy or completeness of scanned copies of this plan sheet.

GENERAL DEMOLITION NOTES

1. **All elevations referenced to NGVD29**

2. **Blast attenuation system will be placed around the pier**

3. **Demolition sequence**

   Mechaically remove the top section of the pier to elevation +9
   Mechanically remove the caisson covers at the base of the buttress walls
   Blast holes will be drilled from elevation +9 down to required depths
   Explosives will be loaded into the bore holes and the firing circuit completed
   Blasting mats will be placed
   Blast will be detonated at slack high tide

4. **Mechanical work may be required to cut rebar and depose remaining debris into the cells**

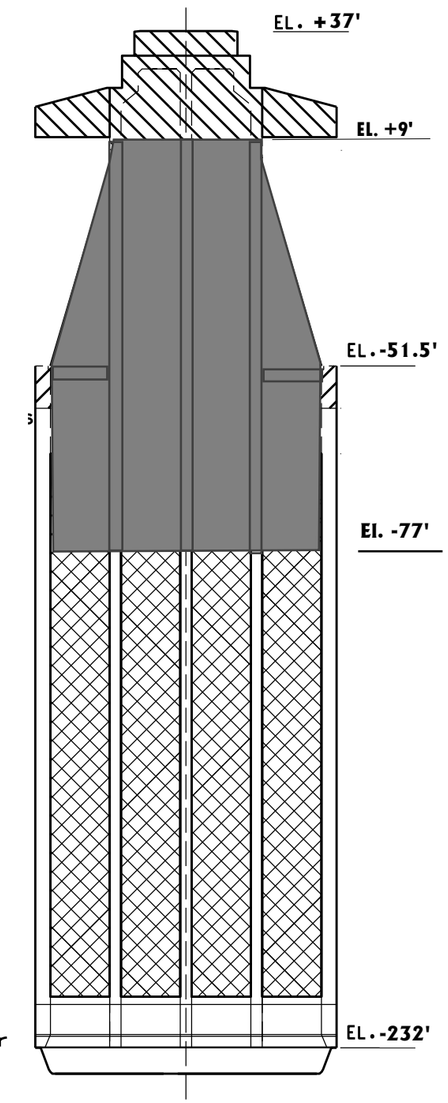

Limits of **removal** Using Wire Saw Cut or Other Mechanical Means

Limits of **removal** Using Blasting

Space Available for Disposal of Debris

SCALE 1"=20'

. DESIGN OVERSIGHT	DESIGN	BY .	CHECKED	. PROJECT ENGINEER	BRIDGE NO. .
. SIGN OFF DATE	DETAILS	BY .	CHECKED		POST MILES .
	QUANTITIES	BY .	CHECKED		

SFOBB EAST SPAN DISMANTLING PROJECT

DESIGN DETAIL SHEET (ENGLISH) (REV. 06-01-09)

ORIGINAL SCALE IN INCHES FOR REDUCED PLANS 0 1 2 3

CU . EA .

DISREGARD PRINTS BEARING EARLIER REVISION DATES

REVISION DATES (PRELIMINARY STAGE ONLY) . SHEET OF .

DIST	COUNTY	ROUTE	POST MILES TOTAL PROJECT	SHEET No.	TOTAL SHEETS
04	SF,Ala	80			

REGISTERED CIVIL ENGINEER X DATE

PLANS APPROVAL DATE

REGISTERED PROFESSIONAL ENGINEER YONG PIL KIM No. C48365 Exp. 06-30-16 CIVIL STATE OF CALIFORNIA

The State of California or its officers or agents shall not be responsible for the accuracy or completeness of electronic copies of this plan sheet.

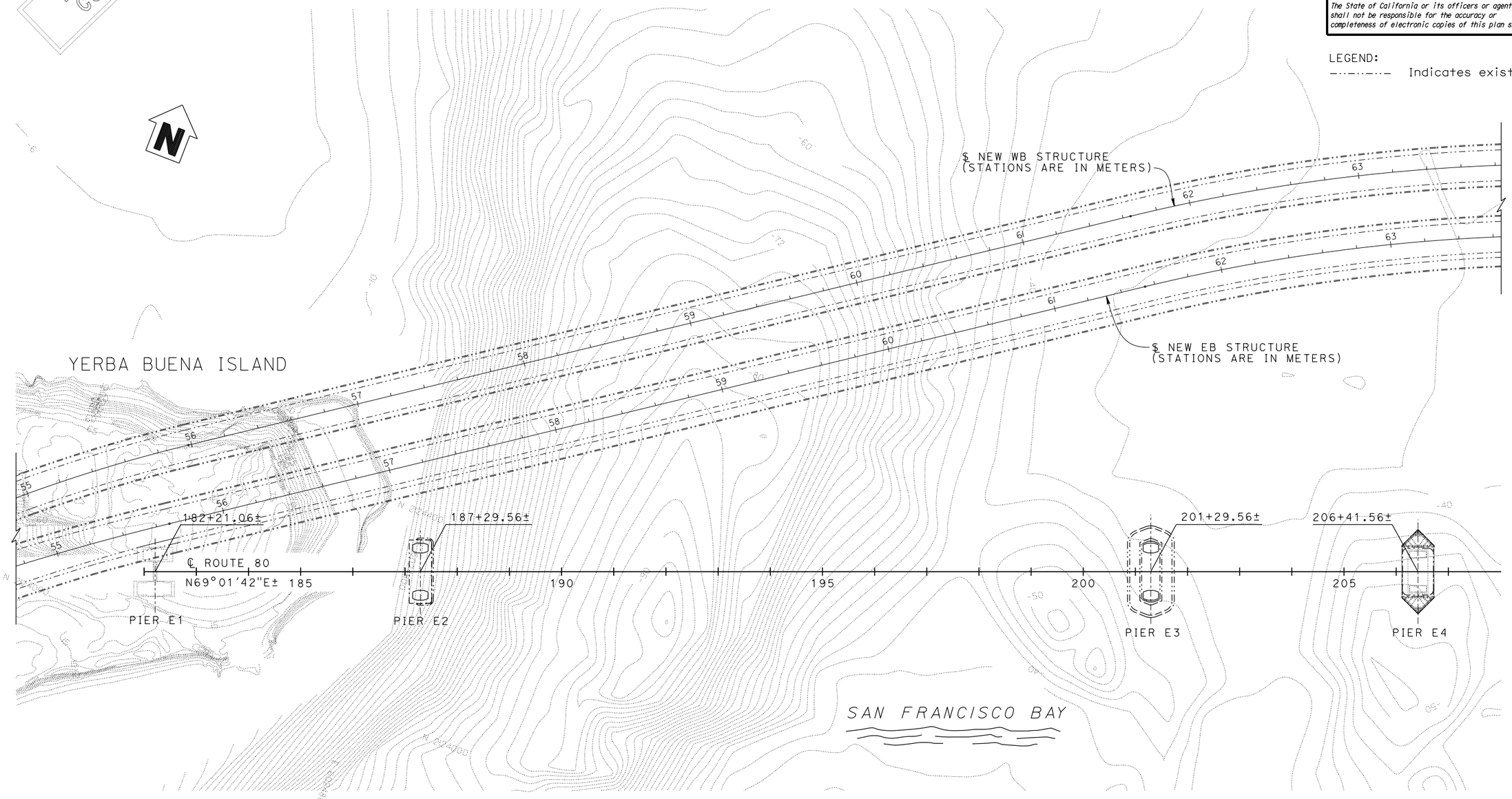

NOTE:
THE CONTRACTOR SHALL VERIFY ALL CONTROLLING FIELD DIMENSIONS BEFORE ORDERING OR FABRICATING ANY MATERIAL.

PLAN
1" = 100'

NOTE:
MUDLINE CONTOURS ARE ACCORDING TO SOUNDINGS TAKEN DURING JANUARY, 1998.

SAN FRANCISCO-OAKLAND BAY BRIDGE
EAST SPAN SEISMIC SAFETY PROJECT

PIER E3 REMOVAL
FOUNDATION PLAN

	BY	CHECKED
DESIGN	Yong Pil Kim	
DETAILS	Carlo Cancino	
QUANTITIES		

STATE OF CALIFORNIA
DEPARTMENT OF TRANSPORTATION

DIVISION OF ENGINEERING SERVICES
STRUCTURE DESIGN
DESIGN BRANCH 8

BRIDGE NO. 33-0025
POST MILE 8.6/1.2

STRUCTURES DESIGN DETAIL SHEET (ENGLISH) (REV. 09-01-10)

ORIGINAL SCALE IN INCHES FOR REDUCED PLANS 0 1 2 3

UNIT: 3593
PROJECT NUMBER & PHASE: 0412000609, 1
CONTRACT NO.: 04-013531

DISREGARD PRINTS BEARING EARLIER REVISION DATES

REVISION DATES

SHEET 3 OF 4

FILE => 33-0025-u-fp01.dgn

USERNAME => s136057 DATE PLOTTED => 20-JAN-2016 TIME PLOTTED => 14:49

DIST	COUNTY	ROUTE	POST MILES TOTAL PROJECT	SHEET No.	TOTAL SHEETS
04	SF,Ala	80			

REGISTERED CIVIL ENGINEER X DATE

PLANS APPROVAL DATE

REGISTERED PROFESSIONAL ENGINEER YONG PIL KIM No. C48365 Exp. 06-30-16 CIVIL STATE OF CALIFORNIA

The State of California or its officers or agents shall not be responsible for the accuracy or completeness of electronic copies of this plan sheet.

LEGENDS:

- Indicates existing
- Indicates limits of removal using mechanical means
- Indicates limits of removal using blasting
- Indicates space available for disposal of debris

DRAFT COPY

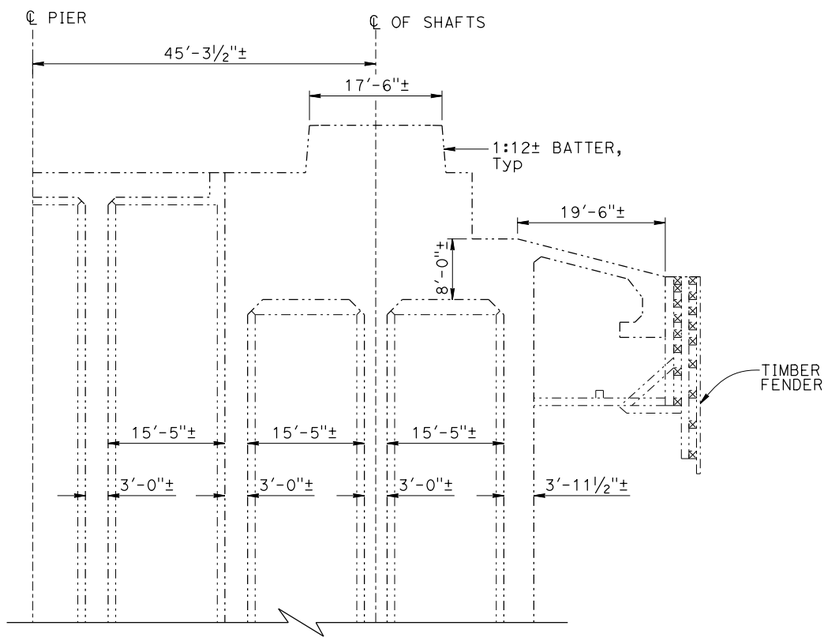

SECTION B-B

No Scale

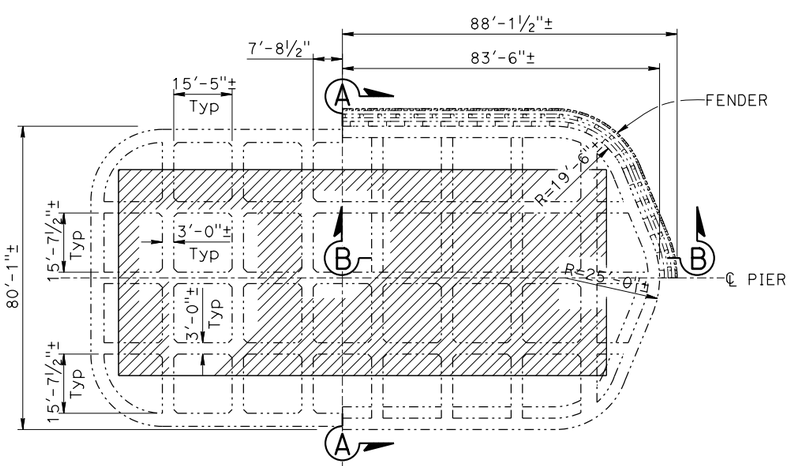

½SECTION THRU CAISSON ½SECTION THRU FENDER

PART SECTION

No Scale

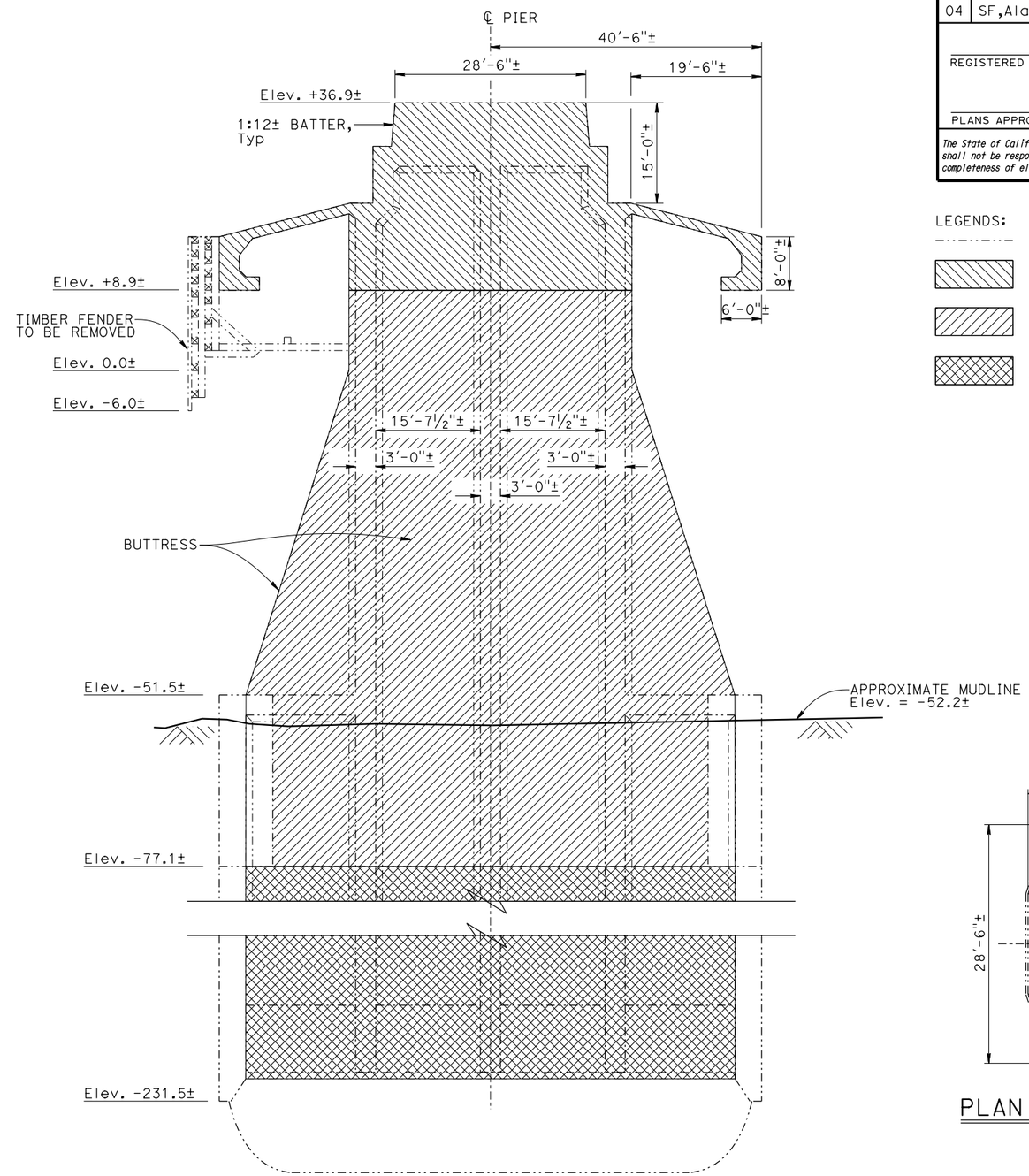

DEMOLITION LIMTS

SECTION A-A

No Scale

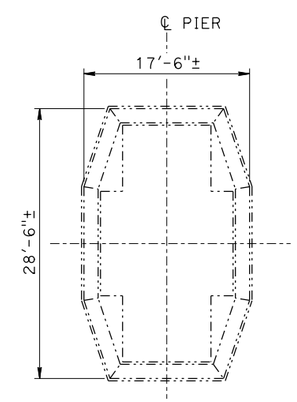

PLAN - TOP OF PIER

No Scale

NOTE:
THE CONTRACTOR SHALL VERIFY ALL CONTROLLING FIELD DIMENSIONS BEFORE ORDERING OR FABRICATING ANY MATERIAL.

	BY	CHECKED
DESIGN	Yong Pil Kim	
DETAILS	Carlo Cancino	
QUANTITIES		

STATE OF CALIFORNIA DEPARTMENT OF TRANSPORTATION

DIVISION OF ENGINEERING SERVICES STRUCTURE DESIGN DESIGN BRANCH 8

BRIDGE NO. 33-0025 POST MILE 8.6/1.2

SAN FRANCISCO-OAKLAND BAY BRIDGE EAST SPAN SEISMIC SAFETY PROJECT

PIER E3 REMOVAL

PIER E3 DETAILS

STRUCTURES DESIGN DETAIL SHEET (ENGLISH) (REV. 09-01-10)

ORIGINAL SCALE IN INCHES FOR REDUCED PLANS 0 1 2 3

UNIT: 3593
PROJECT NUMBER & PHASE: 0412000609, 1 CONTRACT NO.: 04-013531

DISREGARD PRINTS BEARING EARLIER REVISION DATES

REVISION DATES 01-20-15

SHEET 4 OF 4

FILE => 33-0025-v-pe3_details.dgn

USERNAME => e174201 DATE PLOTTED => 20-JAN-2014 TIME PLOTTED => 14:49

Pier E3 Blast Design Parameters

Top of structure to be left at elevation +9 (NGVD29 datum)
Removal limit: elevation -77 (interior walls only)
Hole will be drilled to elevation -55 and -77.
Hole spacing = 4.5'
Total number of holes = 159, 111 @ 86', 36 @ 64', 12 @ 50'
Hole diameter: 86' = 2 ¾ "
64' (N & S end full height walls) = 2 ¾ "
64' & 50' (buttress walls) = 3" (will require a 2.5" ID liner pipe for loading)
Maximum pounds of explosive per delay = 35 pounds
Total explosives weight = 16875.6 pounds
Average overall powder factor = 2.4 (ranges from 3.3 to 1)
Number of individual detonations = 588
Number of delays = 587
Minimum delay separation = 9ms
Total shot time = 5.3 seconds

Orica's I-Kon electronic detonators will be used.

Explosive products will be 1.25"x16", 1.5"x16", 1.75"x16" and 2"x16" Unimax and Dynomax Pro dynamites in cardboard wrapped cartridges.

Explosives decks in each hole will be fired from bottom to top.
Blast will initiate in the interior of the pier and progress sequentially to the outside.

Pier E3 Borehole Locations

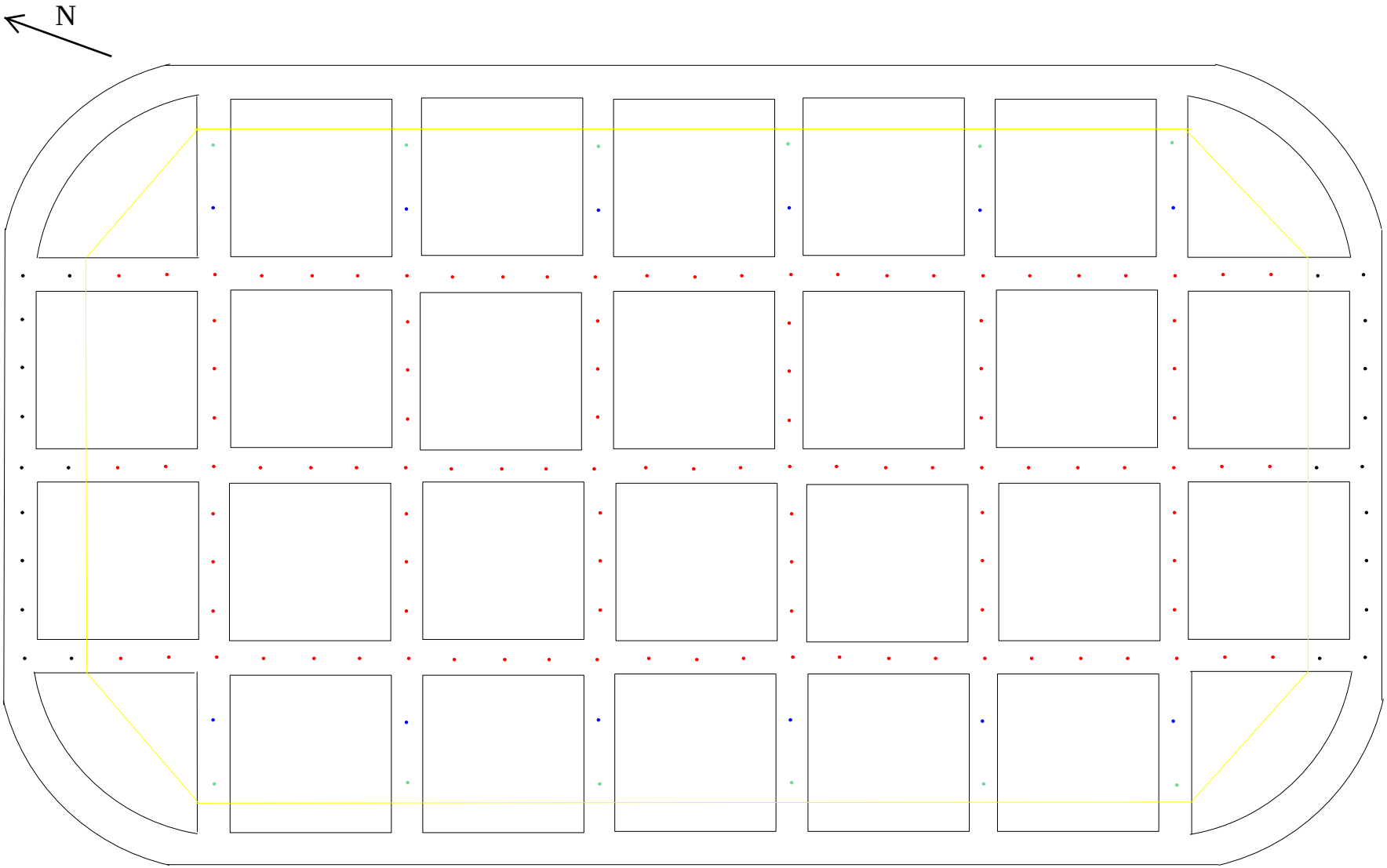

- 2.75" diameter holes 86' deep
- 2.75" diameter holes 64' deep
- 3" diameter holes 64' deep
- 3" diameter holes 50' deep

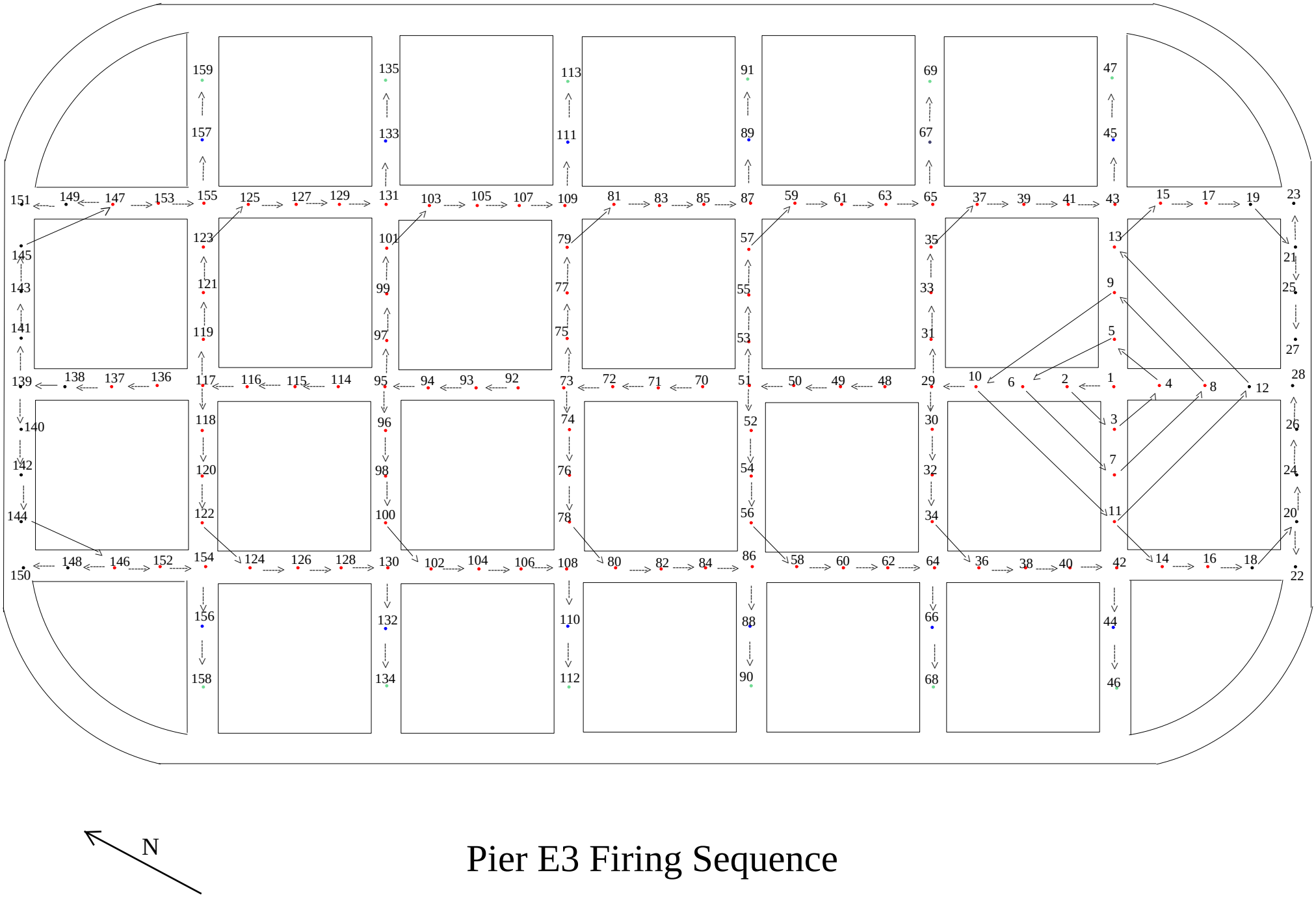

N

Pier E3 Firing Sequence

Pier E3 Shot Timing

hole #	1	2	3	4	5	6	7	8	9	10	11	12	13	14	15	16	17	18	19	20
bottom deck	0	36	72	108	144	180	216	252	288	324	360		423	459	495	531	567			
deck 2	9	45	81	117	153	189	225	261	297	333	369	396	432	468	504	540	576	603	630	657
deck 3	18	54	90	126	162	198	234	270	306	342	378	405	441	477	513	549	585	612	639	666
top deck	27	63	99	135	171	207	243	279	315	351	387	414	450	486	522	558	594	621	648	675

hole #	21	22	23	24	25	26	27	28	29	30	31	32	33	34	35	36	37	38	39	40
bottom deck									900	936	972	1008	1044	1080	1116	1152	1188	1224	1260	1296
deck 2	684	711	738	765	792	819	846	873	909	945	981	1017	1053	1089	1125	1161	1197	1233	1269	1305
deck 3	693	720	747	774	801	828	855	882	918	954	990	1026	1062	1098	1134	1170	1206	1242	1278	1314
top deck	702	729	756	783	810	837	864	891	927	963	999	1035	1071	1107	1143	1179	1215	1251	1287	1323

hole #	41	42	43	44	45	46	47	48	49	50	51	52	53	54	55	56	57	58	59	60
bottom deck	1332	1368	1404					1548	1584	1620	1656	1692	1728	1764	1800	1836	1872	1908	1944	1980
deck 2	1341	1377	1413	1440	1467	1494	1521	1557	1593	1629	1665	1701	1737	1773	1809	1845	1881	1917	1953	1989
deck 3	1350	1386	1422	1449	1476	1503	1530	1566	1602	1638	1674	1710	1746	1782	1818	1854	1890	1926	1962	1998
top deck	1359	1395	1431	1458	1485	1512	1539	1575	1611	1647	1683	1719	1755	1791	1827	1863	1899	1935	1971	2007

hole #	61	62	63	64	65	66	67	68	69	70	71	72	73	74	75	76	77	78	79	80
bottom deck	2016	2052	2088	2124	2160					2304	2340	2376	2412	2448	2484	2520	2556	2592	2628	2664
deck 2	2025	2061	2097	2133	2169	2196	2223	2250	2277	2313	2349	2385	2421	2457	2493	2529	2565	2601	2637	2673
deck 3	2034	2070	2106	2142	2178	2205	2232	2259	2286	2322	2358	2394	2430	2466	2502	2538	2574	2610	2646	2682
top deck	2043	2079	2115	2151	2187	2214	2241	2268	2295	2331	2367	2403	2439	2475	2511	2547	2583	2619	2655	2691

hole #	81	82	83	84	85	86	87	88	89	90	91	92	93	94	95	96	97	98	99	100
bottom deck	2700	2736	2772	2808	2844	2880	2916					3060	3096	3132	3168	3204	3240	3276	3312	3348
deck 2	2709	2745	2781	2817	2853	2889	2925	2952	2979	3006	3033	3069	3105	3141	3177	3213	3249	3285	3321	3357
deck 3	2718	2754	2790	2826	2862	2898	2934	2961	2988	3015	3042	3078	3114	3150	3186	3222	3258	3294	3330	3366
top deck	2727	2763	2799	2835	2871	2907	2943	2970	2997	3024	3051	3087	3123	3159	3195	3231	3267	3303	3339	3375

hole #	101	102	103	104	105	106	107	108	109	110	111	112	113	114	115	116	117	118	119	120
bottom deck	3384	3420	3456	3492	3528	3564	3600	3636	3672					3816	3852	3888	3924	3960	3996	4032
deck 2	3393	3429	3465	3501	3537	3573	3609	3645	3681	3708	3735	3762	3789	3825	3861	3897	3933	3969	4005	4041
deck 3	3402	3438	3474	3510	3546	3582	3618	3654	3690	3717	3744	3771	3798	3834	3870	3906	3942	3978	4014	4050
top deck	3411	3447	3483	3519	3555	3591	3627	3663	3699	3726	3753	3780	3807	3843	3879	3915	3951	3987	4023	4059

hole #	121	122	123	124	125	126	127	128	129	130	131	132	133	134	135	136	137	138	139	140
bottom deck	4068	4104	4140	4176	4212	4248	4284	4320	4356	4392	4428					4572	4608			
deck 2	4077	4113	4149	4185	4221	4257	4293	4329	4365	4401	4437	4464	4491	4518	4545	4581	4617	4644	4671	4698
deck 3	4086	4122	4158	4194	4230	4266	4302	4338	4374	4410	4446	4473	4500	4527	4554	4590	4626	4653	4680	4707
top deck	4095	4131	4167	4203	4239	4275	4311	4347	4383	4419	4455	4482	4509	4536	4563	4599	4635	4662	4689	4716

hole #	141	142	143	144	145	146	147	148	149	150	151	152	153	154	155	156	157	158	159
bottom deck						4860	4896					5040	5076	5112	5148				
deck 2	4725	4752	4779	4806	4833	4869	4905	4932	4959	4986	5013	5049	5085	5121	5157	5184	5211	5238	5265
deck 3	4734	4761	4788	4815	4842	4878	4914	4941	4968	4995	5022	5058	5094	5130	5166	5193	5220	5247	5274
top deck	4743	4770	4797	4824	4851	4887	4923	4950	4977	5004	5031	5067	5103	5139	5175	5202	5229	5256	5283

Pier E3 Column Loads

Full Height Walls (except N & S Ends)

+9'
4' stemming
+5'
4@1.25x16
8@1.5x16
2@2x16
21 lbs, PF=2
-16'
3' stemming
-19'
9@1.75x16
5@2x16
29.6 lbs, PF=2.75
-37'
3' stemming
-40'
14@2x16
35 lbs, PF=3.3
-58'
3' stemming
-61'
12@2x16
30 lbs, PF=3.2
-77'

Total explosives = 115.6 lbs

North and South End Full Height Walls

+9'
4' stemming
+5'
4@1.25x16
8@1.5x16
2@2x16
21 lbs, PF=2
-16'
3' stemming
-19'
8@1.75x16
4@2x16
26 lbs, PF=2.73
-35'
3' stemming
-38'
13@2x16
32.5 lbs, PF=3.2
-55'

Total explosives = 79.5 lbs

Buttress Walls

-13'
5' stemming
-18'
14@2x16
35 lbs, PF=2.7
-37'
3' stemming
-37'
14@2x16
35 lbs, PF=3
-58'
3' stemming
-61'
12@2x16
30 lbs, PF= 2.9
-77'

Total explosives = 100 lbs

-27'
4' stemming
-31'
9@2x16
22.5 lbs, PF=2.5
-43'
3' stemming
-46'
12@2x16
30 lbs, PF=2.9
-55'
3' stemming
-58'
9@2x16
24 lbs, PF=3
-77'

Total explosives = 76.5

All decks will be double primed at bottom of deck with electronic detonators and fired from bottom up.

DYNOMAX™ PRO

Extra Gelatin Nitroglycerin Dynamite

Technical Information

Product Description

DYNOMAX PRO is desensitized extra gelatin dynamite designed to satisfy the majority of explosive application requirements. DYNOMAX PRO is formulated to consistently deliver high detonation velocity and excellent water resistance while reducing cartridge to cartridge gap sensitivity and hole-to-hole propagation problems. DYNOMAX PRO is recommended for bottom loading and as the main explosive charge where high density and energy is required. DYNOMAX PRO is recommended for use as booster, bottom load or floor control solution.

Application Recommendations

- DYNOMAX PRO is an excellent primer for Dynomix (ANFO), Dynomix WR (WR ANFO) or other detonator sensitive packaged product and can be used as a secondary primer in hard seams or at the top of the explosive column.
- Minimum diameter is 32 mm (1¼ in).
- Minimum detonator is No. 8 strength.
- DYNOMAX PRO has been formulated to reduce susceptibility to sympathetic detonation when applied in very wet conditions where boreholes are closely spaced and/or where geological conditions promote this effect. Consult your Dyno Nobel representative for product recommendations where these conditions exist.
- Storage at elevated temperatures and/or high humidity for 12-18 months can reduce the performance of DYNOMAX PRO depending on the diameter. Consult your Dyno Nobel representative for specific recommendations.

Properties

MSDS #1019

Density	(g/cc) Avg	1.45
Energy[a]	(cal/g)	1,055
	(cal/cc)	1,510
Relative Weight Strength[a]		1.20
Relative Bulk Strength[a,b]		2.10
Velocity[c]	(m/s)	6,000
	(ft/s)	19,700
Detonation Pressure[c]	(Kbars)	130
Gas Volume[a]	(moles/kg)	32
Water Resistance		Excellent
Fume Class		Not for underground use

[a] All Dyno Nobel Inc. energy and gas volume values are calculated using PRODET™ the computer code developed by Dyno Nobel Inc. for its exclusive use. Other computer codes may give different values.
[b] ANFO = 1.00 @ 0.82 g/cc
[c] Unconfined @ 50 mm (2 in) diameter.

Hazardous Shipping Description

Explosive, Blasting, Type A 1.1D UN 0081 II
EX200407185

See Product Disclaimer on page 2

DYNO Dyno Nobel
Groundbreaking Performance™

DYNOMAX™ PRO

Technical Information

Transportation, Storage and Handling

- For maximum shelf-life, DYNOMAX PRO dynamite must be stored in cool, dry and well-ventilated magazines. Explosive inventory should always be rotated by using the oldest materials first. For recommended good practices in transporting, storing, handling and using this product, see the booklet "Prevention of Accidents in the Use of Explosive Materials" packed inside each case and the Safety Library Publications of the Institute of Makers of Explosives.
- DYNOMAX PRO must be transported, stored, handled and used in conformity with all applicable federal, state, provincial and local laws and regulations.

Diameter x Length		Nominal Cartridge Count / 25 kg (55 lb) case	Case Dimensions	
mm	in		cm	in
32 x 200	1¼ x 8	105 - 114	44 x 35 x 21	17⅛ x 13⅝ x 8¼
40 x 200	1½ x 8	70 - 76	44 x 35 x 21	17⅛ x 13⅝ x 8¼
45 x 200	1¾ x 8	49 - 55	44 x 35 x 21	17⅛ x 13⅝ x 8¼
50 x 200	2 x 8	40 - 44	44 x 35 x 21	17⅛ x 13⅝ x 8¼
50 x 400	2 x 16[a]	21 - 23	44 x 35 x 21	17⅛ x 13⅝ x 8¼
60 x 400	2¼ x 16[a]	16 - 18	44 x 35 x 21	17⅛ x 13⅝ x 8¼
65 x 400	2½ x 16[a]	13 - 14	44 x 35 x 21	17⅛ x 13⅝ x 8¼
70 x 400	2¾ x 16[a]	11 - 12	44 x 35 x 21	17⅛ x 13⅝ x 8¼
75 x 200	3 x 8[a]	18 - 20	44 x 35 x 21	17⅛ x 13⅝ x 8¼
75 x 400	3 x 16[a]	9 - 11	44 x 35 x 21	17⅛ x 13⅝ x 8¼

[a] Avaliable in spiral tube shell with tapered end.

- Product density is 1.40 g/cc for package diameters less than 50mm (2 in). Use cartridge count to determine actual explosive charge weight.
- Note: All weights are approximate.
- DYNOMAX PRO is available in a wide variety of sizes. Custom sizes are subject to surcharge and may require longer than usual lead times.
- Check with your Dyno Nobel representative should you have any questions.

Product Disclaimer Dyno Nobel Inc. and its subsidiaries disclaim any warranties with respect to this product, the safety or suitability thereof, or the results to be obtained, whether express or implied, INCLUDING WITHOUT LIMITATION, ANY IMPLIED WARRANTY OF MERCHANTABILITY OR FITNESS FOR A PARTICULAR PURPOSE AND/OR OTHER WARRANTY. Buyers and users assume all risk, responsibility and liability whatsoever from any and all injuries (including death), losses, or damages to persons or property arising from the use of this product. Under no circumstances shall Dyno Nobel Inc. or any of its subsidiaries be liable for special, consequential or incidental damages or for anticipated loss of profits.

Dyno Nobel Inc.
2650 Decker Lake Boulevard, Suite 300, Salt Lake City, Utah 84119 USA
Phone 800-732-7534 Fax 801-328-6452 Web www.dynonobel.com

DYNO
Dyno Nobel
Groundbreaking Performance™

UNIMAX®

Technical Information

Extra Gelatin Nitroglycerin Dynamite

Product Description

UNIMAX is an extra gelatin dynamite formulated to consistently deliver high detonation velocity and excellent water resistance. UNIMAX is designed to satisfy the vast majority of explosive applications in hard rock and may be used as the main explosive charge where high density and energy is required or as a primer for ANFO.

Application Recommendations

- UNIMAX is an excellent primer for Dynomix (ANFO), Dynomix-WR (WR ANFO) or other detonator sensitive packaged product and can be used as a secondary primer in hard seams or at the top of the explosive column.
- Minimum diameter is 25 mm (1 in).
- Minimum detonator is No. 8 strength.
- Storage at elevated temperatures and/or high humidity for 1 to 6 months can reduce the performance of Unimax depending on the diameter. Consult your Dyno Nobel representative for specific recommendations.
- Dynamites are susceptible to sympathetic detonation when applied in very wet conditions where boreholes are closely spaced and/or where geological conditions promote this effect. Consult your Dyno Nobel representative for recommendations where these conditions exist.

Properties

MSDS #1019

Density	(g/cc) Avg	1.51
Energy[a]	(cal/g)	1,055
	(cal/cc)	1,510
Relative Weight Strength[a]		1.20
Relative Bulk Strength[a,b]		2.10
Velocity[c]	(m/s)	5,300
	(ft/s)	17,400
Detonation Pressure[c]	(Kbars)	106
Gas Volume[a]	(moles/kg)	32
Water Resistance		Excellent
Fume Class		IME1 & NRCan1[d]

[a] All Dyno Nobel Inc. energy and gas volume values are calculated using PRODET™ the computer code developed by Dyno Nobel Inc. for its exclusive use. Other computer codes may give different values.
[b] ANFO = 1.00 @ 0.82 g/cc
[c] Unconfined @ 50 mm (2 in) diameter.
[d] Approved by Natural Resources Canada as Fume Class 1.

Hazardous Shipping Description
Explosive, Blasting, Type A, 1.1D, UN 0081 II

See Product Disclaimer on page 2

DYNO Dyno Nobel
Groundbreaking Performance™

UNIMAX®

Technical Information

Transportation, Storage and Handling

- UNIMAX must be transported, stored, handled and used in conformity with all applicable federal, state, provincial and local laws and regulations.
- For maximum shelf-life, dynamite must be stored in cool, dry and well-ventilated magazines. Dynamite inventory should always be rotated by using the oldest materials first. For recommended good practices in transporting, storing, handling and using this product, see the booklet "Prevention of Accidents in the Use of Explosive Materials" packed inside each case and the Safety Library Publications of the Institute of Makers of Explosives.

Diameter x Length		Qty / Case	Case Type	Nominal Case Weight	
mm	in			kg	lbs
25 x 200	1 x 8	140	DA	21	47
29 x 200	1 1/8 x 8	100	DA	20	45
32 x 200	1 1/4 x 8	88	DA	21	47
32 x 400	1 1/4 x 16	44	DA	21	47
40 x 200	1 1/2 x 8	60	DA	20	45
40 x 300	1 1/2 x 12	40	DA	21	47
45 x 200	1 3/4 x 8	40	DB	18	40
50 x 200	2 x 8	34	DB	20	45
50 x 400[a]	2 x 16[a]	17	DB	20	45
60 x 400[a]	2 1/4 x 16[a]	14	DB	19	42
65 x 400[a]	2 1/2 x 16[a]	10	DB	20	44
70 x 400[a]	2 3/4 x 16[a]	9	**	**	**
75 x 200	3 x 8	16	DE	21	47
75 x 400[a]	3 x 16[a]	8	DE	21	47

[a] Avaliable in spiral tube shell with tapered end. • Note: all weights are approximate.

**Available upon request. Check with your Dyno Nobel representative should you have any questions.

- Product density is 1.50 g/cc for package diameters less than 50mm (2 in). Use cartridge count to determine actual explosive charge weight.
- UNIMAX is available in a wide variety of sizes. Custom sizes are subject to surcharge and may require longer than usual lead times.

Case Dimensions

DA	45 x 34 x 17 cm	17¾ x 13⅜ x 6⅜ in
DB	45 x 34 x 15 cm	17⅞ x 13⅜ x 5⅞ in
DE	45 X 34 X 17 cm	17⅝ x 13 5/16 x 6¾ in

Product Disclaimer Dyno Nobel Inc. and its subsidiaries disclaim any warranties with respect to this product, the safety or suitability thereof, or the results to be obtained, whether express or implied, INCLUDING WITHOUT LIMITATION, ANY IMPLIED WARRANTY OF MERCHANTABILITY OR FITNESS FOR A PARTICULAR PURPOSE AND/OR OTHER WARRANTY. Buyers and users assume all risk, responsibility and liability whatsoever from any and all injuries (including death), losses, or damages to persons or property arising from the use of this product. Under no circumstances shall Dyno Nobel Inc. or any of its subsidiaries be liable for special, consequential or incidental damages or for anticipated loss of profits.

Dyno Nobel Inc.
2650 Decker Lake Boulevard, Suite 300, Salt Lake City, Utah 84119 USA
Phone 800-732-7534 Fax 801-328-6452 Web www.dynonobel.com

DYNO
Dyno Nobel
Groundbreaking Performance™

tiger values 60 extra gel

```
60 Extra Gel
THE HEAT OF FORMATION IS   -844.948937 CAL/GM
THE STANDARD VOLUME IS          .337856 CC/GM
THE STANDARD ENTROPY IS         .130365 CAL/K/GM  AND
THE STANDARD ENERGY IS     -844.957120 CAL/GM.
OXYGEN BALANCE :      12.729  GR OF O PER 1KG
SHOCK VELOCITY     :    5921.7 M/S              19428.0 FT/S
PARTICLE VELOCITY  :    1689.3 M/S               5542.5 FT/S
SOUND SPEED        :    4232.3 M/S              13885.5 FT/S
DETONATION PRESSURE:  139208.7 ATM
DETONATION TEMPERATURE :    2754.3 DEG. K
THE HEAT OF EXPLOSION IS...   1067.4691CAL/GM

AWS .......  1067.0    CAL/G
ABS .......  1504.0    CAL/CC
RWS .......  116.0     ANFO = 100
RBS .......  194.0    ANFO = .85 g/cc

INGREDIENT           moles/kg

CO2     GAS          11.3142
H2O     GAS           9.9486
N2      GAS           5.6642
CO      GAS            .0539
NO      GAS            .0028
O2      GAS            .0010
H2      GAS            .0047
*CACO3  SOLID          .0999
*NA2O   SOLID         1.3919
*NA2O2  SOLID          .8493
TOTAL   GAS          26.9894
ENERGY PARTITION BETWEEN GASEOUS AND CONDENSED PHASE
GASEOUS PHASE   :  80.94% OF THE TOTAL ENERGY
CONDENSED PHASE :  19.06% OF THE TOTAL ENERGY
```

Material Safety Data Sheet

Dyno Nobel Inc.
2795 East Cottonwood Parkway, Suite 500
Salt Lake City, Utah 84121
Phone: 801-364-4800 Fax: 801-321-6703
E-Mail: dnna.hse@am.dynonobel.com
FOR 24 HOUR EMERGENCY, CALL CHEMTREC (USA) 800-424-9300
CANUTEC (CANADA) 613-996-6666

MSDS # 1019
Date 09/16/10

Supercedes
MSDS # 1019 08/25/10

SECTION I - PRODUCT IDENTIFICATION

Trade Name(s):

D-GEL™ 1000
DYNOSPLIT® D
DYNOSPLIT®: D-1
DYNOMAX PRO™
EXTRA GELATIN: 40%, 75%
GELAPRIME® F
IP: 724, 738
Oil Well Explosive 80%
RED H®A
RED H®B
STONECUTTER™
UNIGEL®
UNIMAX®
VIBROGEL®: 1, 3
Z POWDER™
60% Hi-Pressure Gelatin

Product Class: Dynamites and Blasting Gelatins
Product Appearance & Odor: Powdery to gelatinous solid, light tan to dark brown color. Faint, waxy odor.
DOT Hazard Shipping Description: Explosive, blasting, type A 1.1D UN0081 II
NFPA Hazard Classification: Not Available (See Section IV - Special Fire Fighting Procedures)

SECTION II - HAZARDOUS INGREDIENTS

Ingredients:	CAS#	% (Range)	Occupational Exposure Limits ACGIH TLV-TWA	OSHA PEL-TWA
Nitroglycerin (NG)	55-63-0	3-30	0.05 ppm	0.05 ppm
Ethylene Glycol Dinitrate (EGDN)	628-96-6	5-50	0.05 ppm	0.05 ppm
Nitrocellulose	9004-70-0	0-6	None	None
Ammonium Nitrate	6484-52-2	0-75	None	None
Sodium Nitrate	7631-99-4	0-50	None	None
Sulfur[1]	7704-34-9	0-4	None	None

[1] This ingredient is not found in most of the products listed above.

Ingredients, other than those mentioned above, as used in this product are not hazardous as defined under current Department of Labor regulations, or are present in deminimus concentrations (less than 0.1% for carcinogens, less than 1.0% for other hazardous materials).

SECTION III - PHYSICAL DATA

Boiling Point: Not Applicable
Vapor Density: Not Applicable
Percent Volatile by Volume: Not Applicable

Evaporation Rate (Butyl Acetate = 1): Not Applicable

Vapor Pressure: Not Applicable
Density: 0.8-1.48 g/cc
Solubility in Water: Ammonium and sodium nitrates are completely soluble. NG and EGDN are very slightly soluble.

DYNO
Dyno Nobel
Groundbreaking Performance

SECTION IV - FIRE AND EXPLOSION HAZARD DATA

Flash Point: Not Applicable **Flammable Limits:** Not Applicable
Extinguishing Media: (See Special Fire Fighting Procedures section.)
Special Fire Fighting Procedures: Do not attempt to fight fires involving explosive materials. Evacuate all personnel to a predetermined safe location, no less than 2,500 feet in all directions.
Unusual Fire and Explosion Hazards: Can explode or detonate under fire conditions. Burning material may produce toxic vapors.

SECTION V - HEALTH HAZARD DATA

Effects of Overexposure

Eyes: May cause irritation, redness and tearing.
Skin: Contact may result in headache, nausea and blood vessel dilation.
Ingestion: May result in headache, nausea, intestinal upset and blood vessel dilation.
Inhalation: May result in headache, nausea and blood vessel dilation.
Systemic or Other Effects: None known.

Emergency and First Aid Procedures

Eyes: Irrigate with running water for at least fifteen minutes. If irritation persists, seek medical attention.
Skin: Remove contaminated clothing. Wash with soap and water.
Ingestion: Seek medical attention.
Inhalation: Remove to fresh air. If irritation persists, seek medical attention.
Special Considerations: None.

SECTION VI - REACTIVITY DATA

Stability: Stable under normal conditions. May explode when subjected to fire, supersonic shock, or high-energy projectile impact, especially when confined or in large quantities.
Conditions to Avoid: Keep away from heat, flame, ignition sources and strong shock.
Materials to Avoid (Incompatibility): Corrosives (mineral acids, bases, strong acids).
Hazardous Decomposition Products: Carbon Monoxide (CO), Hydrogen Sulfide (H_2S), Nitrous Oxides (NO_X), and Sulfur Oxides (SO_X).
Hazardous Polymerization: Will not occur.

SECTION VII - SPILL OR LEAK PROCEDURES

Steps to be taken in Case Material is Released or Spilled: Protect from all ignition sources. In case of fire evacuate area not less than 2,500 feet in all directions. Notify authorities in accordance with emergency response procedures. Only personnel trained in emergency response should respond. If no fire danger is present, and product is undamaged and/or uncontaminated, repackage product in original packaging or other clean DOT approved container. Ensure that a complete account of product has been made and is verified. Follow applicable Federal, State, and local spill reporting requirements. Contact of this product with water may result in a reportable release.

Waste Disposal Method: Disposal must comply with Federal, State and local regulations. If product becomes a waste, it is potentially regulated as a hazardous waste as defined under the Resource Conservation and Recovery Act (RCRA) 40 CFR, part 261. Review disposal requirements with a person knowledgeable with applicable environmental law (RCRA) before disposing of any explosive material.

Material Safety Data Sheet

SECTION VIII - SPECIAL PROTECTION INFORMATION

Ventilation: Forced ventilation may be necessary where natural ventilation is limited. Magazines containing NG and/or EGDN based explosives must be ventilated before entry.
Respiratory Protection: None normally required.
Protective Clothing: Chemical resistant (nitrile) gloves are suggested.
Eye Protection: Safety glasses are recommended.
Other Precautions Required: Inhalation and skin contact should be minimized to avoid headaches, nausea, and blood vessel dilation. Protective clothing should be changed daily, more often if contaminated.

SECTION IX - SPECIAL PRECAUTIONS

Precautions to be taken in handling and storage: Store in cool, dry, well-ventilated location. Store in compliance with Federal, State, and local regulations. Keep away from heat, flame, ignition sources, and strong shock.
Precautions to be taken during use: Avoid breathing the fumes or gases from detonation of explosives. Use accepted safe industry practices when using explosive materials. Unintended detonation of explosives or explosive devices can cause serious injury or death.
Other Precautions: It is recommended that users of explosive materials be familiar with the Institute of Makers of Explosives Safety Library Publications.

SECTION X - SPECIAL INFORMATION

Chemical Name	CAS Number	% By Weight
Nitroglycerin	55-63-0	3-40

The reporting requirements of Section 313 of Title III of the Superfund Amendments and Reauthorization Act of 1986 and 40 CFR 372 may become applicable if the physical state of this product is changed to an aqueous solution. If an aqueous solution of this product is manufactured, processed, or otherwise used, the nitrate compounds category and ammonia listing of the previously referenced regulation should be reviewed.

Disclaimer

Dyno Nobel Inc. and its subsidiaries disclaim any warranties with respect to this product, the safety or suitability thereof, the information contained herein, or the results to be obtained, whether express or implied, INCLUDING WITHOUT LIMITATION, ANY IMPLIED WARRANTY OF MERCHANTABILITY OR FITNESS FOR A PARTICULAR PURPOSE AND/OR OTHER WARRANTY. The information contained herein is provided for reference purposes only and is intended only for persons having relevant technical skills. Because conditions and manner of use are outside of our control, the user is responsible for determining the conditions of safe use of the product. Buyers and users assume all risk, responsibility and liability whatsoever from any and all injuries (including death), losses, or damages to persons or property arising from the use of this product or information. Under no circumstances shall either Dyno Nobel Inc. or any of its subsidiaries be liable for special, consequential or incidental damages or for anticipated loss of profits.

Technical Data Sheet

The Power of Partnership

i-kon™ II Electronic Detonator

Description

The *i-kon™ II* electronic detonator is one of Orica's exciting Next Generation products.

The *i-kon™ II* detonator (standard or RX) is used in conjunction with:

i-kon™ Logger or the new Logger II (available late 2013)

and with the following hardware with firmware upgrades: *i-kon™* Blaster 400 or 2400S

i-kon™ Surface Remote Blaster System (SURBS hardware)

i-kon™ Centralised Electronic Blasting System including lock box and remote blasting box (CEBS hardware)

Duplex harness wire

Applications

i-kon™ II detonators are the most advanced Electronic detonators in the market and are particularly suitable for high value and complex blasts at large Surface and Underground operations and in the most challenging environments

Key Benefits

- Reliable, effective and safe blasting is achieved because of the rugged, proven construction of the *i-kon™ II* detonator, with testability on the blast pattern
- Efficient operations on the blast pattern are afforded by the convenient packaging and excellent, glove-friendly connector and duplex harness wire
- Predictable blasting results with minimal environmental impact are achievable because of the high precision of *i-kon™ II* electronic detonators
- Reliable initiation of boosters is achieved by the full strength base charge in the *i-kon™ II* detonator
  Reduced inventory frees up working capital because *i-kon™II* detonators are fully programmable; any delay between 0 and 30,000ms is always in your magazine
- New sub-millisecond programmability for any desired delay between 0 and 10,000 ms in 0.1ms steps (available late 2013)

Properties

Property	*i-kon™ II*	*i-kon™ II RX*
Wire color	Yellow	Red
Tensile strength (kg) / (lbs)	22 / 48	25 / 55
Explosives charge weight (mg)	900	
Connector color	Blue	
Shell length x diameter	89 x 7.6 mm	
Shell material	Copper alloy	
Programmability (ms) standard sub-ms, available late 2013	1ms to 30 s 0.1ms to 10 s	
Max delay time (seconds)	30	
Precision as coefficient of variation	0.005%	

Recommendations for Use

- *i-kon™* and *i-kon™ II* detonators should never be mixed in the same blast pattern or connected to the same equipment at the same time. Misfires may result.
- All *i-kon™II* blasting equipment can only be used with *i-kon™II* detonators, and *i-kon™ II* detonators must not be connected to any other blasting equipment.
- Damage to the leg wire insulation is the most common cause of problems with electronic blasting systems; exercise care and protect the wires when loading and stemming holes
- Handle *i-kon™II* blasting equipment with care; it is not designed for immersion in water or for dropping onto a hard surface
- Never open *i-kon™II* blasting equipment. It should be serviced or repaired only by Orica or approved agents

i-kon™ II Electronic Detonator

Available Lengths / Packaging

i-kon™ II detonators are available in the following lengths and packaging:

Standard *i-kon™ II* detonators (>10m spooled)

	1.1B packaging		1.4S packaging	
Length, m (configuration, Coil or Spool)	Units / Case	Weight per Case kg / lb	Units / Case	Weight per Case kg / lb
10 (C)	60	6.4 / 14.1	40	7.4 / 16.3
15 (S)	66	11.2 / 24.7	32	8.5 / 18.7
20 (S)	66	13.6 / 30.0	32	9.7 / 21.4
30 (S)	36	10.6 / 23.3	32	11.8 / 26.0
40 (S)	30	11.4 / 25.1	16	7.9 / 17.4
60 (S)	20	11.0 / 24.2	16	10.1 / 22.2

i-kon™ II RX detonators (all spooled)

	1.1B packaging		1.4S packaging	
Length m (configuration, Coil or Spool)	Units / Case	Weight per Case kg / lb	Units / Case	Weight per Case kg / lb
10	60	10.0 / 22.0	32	8.4 / 18.5
15	60	13.0 / 28.7	32	10.0 / 22.0
20	48	13.1 / 28.9	32	11.4 / 25.1
30	30	11.8 / 26.0	16	8.2 / 18.1
40	25	12.5 / 27.5	16	9.8 / 21.6
60	18	11.0 / 24.2	12	9.9 / 21.8
80	12	11.5 / 25.3	12	12.3 / 27.1

Safety

The *i-kon™II* electronic initiating systems provide a high level of safety against initiation by static electricity, stray electrical currents and radio frequency transmissions. However, *i-kon™ II* detonators contain pyrotechnics and molecular explosives, which can initiate under intense impact, friction or heat. As with all high explosives, these detonators must be handled and stored with care. *i-kon™ II* detonators may only be used at temperatures up to 70ºC. Seek advice from Orica for priming systems suitable for higher temperatures.

See Safety Data Sheet for more information.

Sleep-Time Within Boreholes

The recommended maximum sleep time is 21 days. Sleep time is dependent on ground water conditions. An Orica Technical Services Representative should be consulted if special conditions exist that may reduce the allowed sleep time, or if sleep times longer than 21 days are needed.

Product Classification

Authorised Name: i-kon™ II

Correct Shipping Name: Detonators, Electric for blasting

Hazard Class	1.1B	1.4S
UN Number	0030	0456
EX Number	EX2010060238	EX2010080328

All regulations pertaining to the handling and use of such explosives apply.

Storage and Transport

Store *i-kon™ II* detonators in a suitably licensed magazine for Class 1.1B explosives. The cases should be stacked in the manner designated on the cases.

i-kon™ II detonators have a storage life of up to 5 years in an approved magazine. The product is best stored at temperatures between -4°F (-20°C) to +120°F (+50°C).

i-kon™ II detonators may be transported at temperatures between -40°F (-40°C) to +149°F (+65°C).

i-kon™ II Electronic Detonator

Disposal

Disposal of explosive materials can be hazardous. Methods for safe disposal of explosives may vary depending on the user's situation. Please contact a local Orica representative for information on safe practices.

Trademarks

The word Orica, the Ring device and the Orica mark are trademarks of Orica Group Companies. *i-kon*™ is a trademark of Orica Explosives Technology Pty Ltd ACN 075 659 353, 1 Nicholson Street, East Melbourne, Victoria, Australia

Disclaimer

The information contained herein is based on experience and is believed to be accurate and up to date as at the date of its preparation. However, uses and conditions of use are not within the manufacturer's control and users should determine the suitability of such products and methods of use for their purposes. Neither the manufacturer nor the seller makes any warranty of any kind, express or implied, statutory or otherwise, except that the products described herein shall conform to the manufacturer's or seller's specifications. The manufacturer and the seller expressly disclaim all other warranties, INCLUDING, WITHOUT LIMITATION, WARRANTIES CONCERNING MERCHANTABILITY OR FITNESS FOR A PARTICULAR PURPOSE. Under no circumstances shall the manufacturer or the seller be liable for indirect, special, consequential, or incidental damages without limitation, damages for lost or anticipated profits.

Orica Canada Inc.
301 Hotel de Ville
Brownsburg, W
QC J8G 3B5
Tel: +1 303 268 5000
Fax: +1 303 268 5250

Orica USA Inc.
33101 East Quincy Ave
atkins, CO 80137
Tel: +1 303 268 5000
Fax: +1 303 268 5250

Emergency Contact Telephone Numbers

For chemical emergencies (24 hour) involving transportation, spill, leak, release, fire or accidents:

Canada: Orica Canada emergency response **1-877-561-3636**

USA: Chemtrec **1-800- 424-9300**

For lost, stolen or misplaced explosives:

USA: **BATFE** 1-800-800-3855**.** Form ATF F5400.0 must be completed and local authorities (state / municipal police, etc) must be advised.

Material Safety Data Sheet

SECTION 1. IDENTIFICATION OF THE SUBSTANCE / PREPARATION AND COMPANY IDENTIFICATION

Product Name: **i-kon & i-kon II Electronic Detonators**
Product Code: 20174
Alternate Names: **i-kon R, i-kon II R, i-kon RX, i-kon II RX, i-kon SNS, i-kon II SNS, i-kon TX, i-kon II TX, i-kon X-414, i-kon II X-414, i-kon X-416, i-kon II X-416, i-kon X-418, i-kon II X-418 i-kon XT, i-kon II XT**
UN No.: UN0456 or UN0030 (Depending on packaging)
Recommended Use: All i-kon detonator types are used as initiators for detonator sensitive explosives, except the i-kon SNS detonator, which is used for initiation of non-electric detonator assemblies or detonating cords.

Suppliers:

Orica Canada Inc.
301 Hotel de Ville,
Brownsburg-Chatham, QC J8G 3B5
For MSDS Requests: 1-450-533-4201

Orica USA Inc.
33101 E. Quincy Avenue
Watkins, CO 80137
For MSDS Requests: 1-303-268-5000

EMERGENCY CONTACT TELEPHONE NUMBERS

FOR CHEMICAL EMERGENCIES (24 HOUR) INVOLVING TRANSPORTATION, SPILL, LEAK, RELEASE, FIRE OR ACCIDENTS: **IN CANADA CALL:** THE ORICA CANADA TRANSPORTATION EMERGENCY RESPONSE SYSTEM AT **1-877-561-3636. IN THE U.S. CALL:** CHEMTREC **1-800- 424-9300. IN THE U.S.:** FOR LOST, STOLEN OR MISPLACED EXPLOSIVES CALL BATF **1-800-800-3855**. FORM ATF F5400.0 MUST BE COMPLETED AND LOCAL AUTHORITIES (STATE / MUNICIPAL POLICE, ETC) MUST BE ADVISED.

SECTION 2. HAZARDS IDENTIFICATION

Emergency Overview: The following information is the potential hazards associated with the ingredient(s) in this product. It is our belief that, under conditions of normal occupational exposure, this product should pose no such hazards to the user. Main risk is that of explosion by shock, friction, fire or other sources of ignition. Read the entire MSDS for a more thorough evaluation of the hazards.

Appearance: Ingredients are housed in a metal alloy tube closed at one end with a moulded plastic plug and attached electric lead wires at the opposite end. The detonator of the i-kon SNS assembly is housed in a plastic connected block.

SECTION 3. COMPOSITION / INFORMATION ON INGREDIENTS

Chemical Name	CAS No.	Weight %
Metal and Plastic component articles	Not Listed	95-100
Pentaerythritol tetranitrate (PETN)	78-11-5	<3.0
Lead azide	13424-46-9	<0.5
Lead picrate	25721-38-4	<0.1
Lead dinitrophenol	625080-35-5	<0.1
Lead dioxide PbO2	1309-60-0	<0.1
Nitrocotton	9004-70-0	<0.1

SECTION 4. FIRST-AID MEASURES

General: Not applicable; this is a manufactured article that will not result in exposure to the chemical components under normal conditions of use. In the event of contact causing injury, administer first aid appropriate for burns, lacerations and bruises.

Inhalation: In the event that workers are overexposed to fumes and vapors resulting from detonation, remove victim from exposure and provide artificial respiration if not breathing.

SECTION 5. FIRE-FIGHTING MEASURES

Flammable properties: **PRODUCT WILL DETONATE.** Expected to be sensitive to mechanical impact. i-kon detonators have built-in protection against human body generated electrostatic charges but should be kept away from more powerful electrical stimuli such as grid voltages and lightning.

Precautions for Fire Fighters: **DO NOT FIGHT FIRES INVOLVING EXPLOSIVE MATERIALS.** This product is a high explosive with a mass detonation hazard. Mass detonation only applies to the 1.1B explosives classification.

IMMEDIATELY EVACUATE ALL PERSONNEL FROM THE AREA TO A SAFE DISTANCE. GUARD AGAINST RE-ENTRY.

When controlling fire **before** involvement of explosives, firefighters should wear positive pressure self-contained breathing apparatus (SCBA) and full protective gear. Keep product and empty container away from heat and sources of ignition. Water may be applied through fixed extinguishing system (sprinklers) as long as people need not be present for

the system to operate. Water may be used on small fires. Thermal decomposition can lead to release of irritating gases and vapors.

SECTION 6. ACCIDENTAL RELEASE MEASURES

Spills, Leaks or Releases: If not damaged, pick up by hand. Use normal precautions taken for handling explosives.
Deactivating Chemicals: Not required. If detonators are damaged, contact an Orica Canada Inc. or Orica USA Inc. technical representative.

SECTION 7. HANDLING AND STORAGE

Handling: i-kon detonators are explosive devices and should only be used under the supervision of trained personnel. Protect containers from physical damage. Keep away from incompatible materials, heat, sparks, flames and other ignition sources. Avoid rough handling.

Storage: Store under moderate temperatures recommended by a technical services representative. Store under dry conditions in a well ventilated magazine that has been approved for detonator storage. Do NOT store detonators in an explosives magazine. Keep away from heat, sparks and flames. Keep containers closed. i-kon detonators should be kept well away from explosives products; protected from physical damage; separated from oxidizing materials, combustibles, and sources of heat. Keep away from incompatibles. Meet all legal requirements for shipping and magazine storage.

Storage Temperature: It is recommended that detonators not be stored or used at temperatures exceeding 70℃ (158℉) without approved procedures to address the elevated temperatures.

SECTION 8. EXPOSURE CONTROLS / PERSONAL PROTECTION

Preventive Measures: Recommendations listed in this section indicate the type of equipment that will provide protection against exposure to this product under normal conditions of use. Conditions of use, adequacy of engineering or other control measures, and actual exposure situations will dictate the need for specific protective devices at your workplace.

Engineering controls: Full-handling precautions should be taken at all times.

PERSONAL PROTECTIVE EQUIPMENT:

Eye protection: Safety glasses with side-shields.
Skin protection: Gloves and protective clothing made from cotton should provide adequate protective.
Respiratory protection: No special protective equipment required.
General hygiene considerations: Handle in accordance with good industrial hygiene and safety practice.

EXPOSURE GUIDELINES:

Product: None established for product
Hazardous Ingredients: Most likely exposure is from detonation products such, as Nitrogen Dioxide or Carbon Monoxide.

SECTION 9. PHYSICAL AND CHEMICAL PROPERTIES

Physical State: Article
Alternate Name(s): None
Chemical Name: Not applicable
Chemical Family: Explosive
Molecular Formula: Not applicable
Odor: Odorless.
pH: Not applicable
Vapor pressure (mmHg at 20℃/68℉) Not applicable
Vapor density (Air = 1) Not applicable
Boiling Point Not applicable
Solubility (Water) Not applicable
Solubility (Other) Not applicable
Specific Gravity: Not applicable
Evaporation Rate: Not applicable
Melting point/range: Plastic components melt between 100℃ and 120℃. PETN melts at 284℉ / 140℃

SECTION 10. STABILITY AND REACTIVITY

Stability: Can explode from impact, friction, excessive heating or powerful electrical stimuli such as grid voltages and lightning.
Conditions to avoid: Keep away from impact, friction or heat.
Incompatible materials: Strong oxidizing agents.
Hazardous decomposition products: Thermal decomposition products are toxic and may include lead, hydrocarbons, oxides of carbon and nitrogen.
Hazardous Polymerization: None under normal processing

SECTION 11. TOXICOLOGICAL INFORMATION

The construction of these articles should prevent any chemical contamination. No adverse health effects are expected if the product is handled in accordance with this Material Safety Data Sheet and the manufacturer's recommendations.

The following information relates to the pure ingredients of this product. **S**ymptoms or effects that may arise if the article is mishandled and overexposure occurs:

TOXICOLOGICAL DATA:

PRODUCT:	None established for the product.
INGREDIENTS:	PETN - Oral LD50 (mouse) = 25,000 mg/kg

POTENTIAL HEALTH EFFECTS:

Ingestion: Highly unlikely under normal conditions of use.
Inhalation: Inhalation is not a likely route of exposure due to the physical form of the article and is thus not applicable. Detonation products may be irritating and/or toxic. Test firing of detonators in poorly ventilated areas can cause presence of lead fume in air. Lead fumes may be an irritant to mucous membranes and respiratory tract.
Skin Contact: No evidence of irritant effects from normal handling and use.
Eye Contact: May result in physical injury.
Sub chronic Effects: None known
Chronic Effects: Long-term exposure to low concentrations of lead may result in altered hemoglobin breakdown, anemia and central and peripheral nervous system damage.
Carcinogenicity: The ingredients of this product are not classified as carcinogenic by ACGIH (American Conference of Governmental Industrial Hygienists) or IARC (International Agency for Research on Cancer), not regulated as carcinogens by OSHA (Occupational Safety and Health Administration), and not listed as carcinogens by NTP (National Toxicology Program).
Mutagenicity: There is no evidence of mutagenic potential
Reproductive Effects: It is our belief that under normal conditions of use, this product should pose no reproductive hazard to the worker. Lead exposure may cause reproductive effects based on studies in laboratory animals and on human epidemiological studies.
Teratogenicity and Fetotoxicity: It is our belief that under normal conditions of use, this product should pose no reproductive hazard to the worker. Lead has been shown to cause congenital abnormalities and behavioral deficits in experimental animals in addition to its ability to increase the number of miscarriages, stillbirths and abortions in lead-exposed women.
Synergistic Materials: None known.

SECTION 12. ECOLOGICAL INFORMATION

Environmental Effects: In consideration of the production and use of this product, it is unlikely that significant environmental exposure will arise.
Ecotoxicity: Contains no substances known to be hazardous to the environment or not degradable in wastewater treatment plants.

SECTION 13. DISPOSAL CONSIDERATIONS

Waste Disposal Method:	Burn under supervision of an expert at a government-approved explosive burning ground or destroy, by detonation in boreholes, in accordance with applicable local, provincial and federal laws. Call upon the services of an Orica Canada Inc. or Orica USA Inc. technical representative

SECTION 14. TRANSPORT INFORMATION

DOT:		
Proper shipping name:	Detonators, Electric	Detonators, Electric
Hazard Class	1.4S	1.1B
UN:	0456	0030
Packing group	II	II
TDG:		
Proper shipping name:	Detonators, Electric	Detonators, Electric
Hazard Class:	1.4S	1.1B
UN:	0456	0030
Packing group	II	II

SECTION 15. REGULATORY INFORMATION

CANADIAN CLASSIFICATION: This product has been classified in accordance with the hazard criteria of the CPR (Controlled Products Regulations) and this MSDS (Material Safety Data Sheet) contains all the information required by the CPR.
Controlled Products Regulations (WHMIS) Classification: This product is an explosive and is not regulated by WHMIS
CEPA / Canadian Domestic Substances List (DSL): The substances in this product are on the Canadian Domestic Substances List (CEPA DSL)
IARC Classification: None of the components for this product are listed on IARC.

USA CLASSIFICATION:

OSHA Classification: Physical: Explosive. Oxidizer. **Health:** Not Regulated.
Target Organ: Reproductive Tract (Lead)
SARA Regulations Sections 313 and 40CFR 372: This product contains the following toxic chemical(s) subject to reporting requirements, Lead, Lead Compounds
Ozone Protection and 40CFR 42: This product does not contain, nor is it manufactured with ozone depleting substances.
Other Regulations/Legislation which apply to this product: New Jersey Special Health Hazard Substance List, New Jersey RTK Environmental Hazardous Substance, Massachusetts Right-to-Know, New Jersey Right-to-Know.

SECTION 16. OTHER INFORMATION

Prepared by: Safety, Health and Environment (303) 268-5000
Next Revision: October 28, 2014

Disclaimer: The information contained herein is offered as a guide to the handling of this specific material and has been prepared in good faith by technically knowledgeable personnel. It is not intended to be all-inclusive and the manner and conditions of use and handling may involve other and additional considerations. No warranty of any kind is given or implied and Orica will not be liable for any damages, losses, injuries or consequential damages which may result from the use of or reliance on any information contained herein.

End of MSDS

Safety
&
Explosives Transportation

PROTECTION OF THE PUBLIC

General

The Pier E3 blast design has taken into consideration the proximity of buildings in the area, the new SFOBB east span, waterways, and adjacent work areas. All explosives will be handled, transported, used and stored in accordance with all State and Federal Regulations. All on site workers will be notified of the activities and instructed to stay clear of the blast area. Signs will be posted to identify the blast area to other workers on the site. Only those authorized by the blaster will be permitted in this area. All unused product will be returned to the explosives distributor's delivery truck prior to detonating the blast. The structure will be covered with blasting mats to reduce air blast and prevent any flying debris. Prior to detonation, the blaster will ensure that a 500' radius danger area is clear of all people and the 1500' marine traffic safety zone is clear and secured by the safety boats. The waterway will be secured 15 minutes prior to the scheduled shot time and will remain secured until the blaster gives the "all clear". All persons involved with securing the blast zone will be equipped with radios. When it is confirmed that the zone is clear and the Blaster is comfortable with the conditions, he will sound the 5 minute warning, check with stationed personnel to ensure the zone is still clear, give the 1 minute warning, conduct a final radio check with stationed personnel, fire the shot, check the post shot conditions and give the "all clear" signal.

Local police and fire departments will be made aware of the blasting schedule and any change to the schedule in advance. Should circumstances arise that prevents the firing of any loaded explosives at the scheduled time, a security person will guard the shot until the blast is fired at a new time. The pier, once loaded with explosives, will not be left unattended. All local police and fire departments will be notified of the updated situation.

Warnings and Signals

The blaster will warn all personnel on the job site of an impending blast through communication with the general contractor's superintendent and the use of warning signals. The warning signals to be used are as follows:

5 minute warning = three 3 second soundings of the air horn
1 minute warning = two 3 second soundings of the air horn
All clear = one 10 second sounding of the air horn

Before the blast is fired, a loud audible warning signal shall be given by the blaster in charge.

Pre-blast warnings will also be broadcasted to personnel via radio.

Pre-Blast Notifications

All required agencies will be notified 48 hours before any blast to coordinate with the blaster in charge to determine the proper time for the blasting. A two hour notification will

be given to the general contractor’s superintendent. A blast will not be fired until communication with the guards at the perimeter of the secured danger zone and marine traffic safety zone and visual inspection of both confirm that they are clear of personnel and vessels.

Control of Blast Debris

Prior to the firing of the blast the structure will be covered with approved blasting mats and/or other acceptable cover material.

1500 ft marine safety zone
Blast area (50' radius around pier)
500 foot danger area

PROTECTION OF EXISTING STRUCTURES

General

The Pier E3 blast design has taken into consideration the proximity of the new bridge piers, commercial/residential structures, and utilities. Pounds of explosives per delay have been designed to produce minimal negative impacts on these structures.

The pier will be covered with wire-rope blast mats and other cover material prior to detonation to prevent any flying debris.

Seismographs will be set up at the closest structures to record the resulting ground vibrations and air overpressures. The blast event will be monitored and recorded.

Pre-Condition Surveys

When required, the contractor shall arrange for a pre-blast survey of any nearby buildings, structures, or utilities which may potentially be at risk from blasting damage. The pre-blast surveys must contain drawings of each wall of the structure and photographs of existing damage. The survey method used shall be acceptable to the contractor's insurance company. The pre-blast survey records shall be made available to the Department for review. Occupants of local buildings shall be notified prior to the commencement of blasting.

Vibration Control and Monitoring

When blasting near buildings, structures, or utilities that may be subject to damage from blast induced ground vibrations, the ground vibrations shall be controlled by the use of properly designed delay sequences and allowable charge weights per delay. Allowable charge weights per delay shall be based on vibration levels which will not cause damage. The allowable charge weights per delay shall be established through industry standard prediction equations and constantly checked through seismograph monitoring of the blast-generated ground vibration levels.

The blast will be monitored using approved seismographs located, as approved, between the blast and the closest structure subject to blast damage and other locations as identified by the Engineer. The seismographs will be capable of recording particle velocity for three mutually perpendicular components of vibration in the range generally found with controlled blasting.

Data recorded for the shot shall be furnished to the blaster in charge and the Department and shall include the following:

1. Identification of instrument used.
2. Name of equipment operator.
3. Distance and direction of recording station from blast area.

4. Type of ground at recording station and material on which the instrument is placed.
5. Maximum particle velocity in each component.
6. Resultant peak particle velocity.
7. Frequency, in hertz, of the maximum particle velocity in each component.
8. A dated and signed copy of records of seismograph readings.

The accepted conservative safe limits for blast vibration are given in Table 1 below.

TABLE 1

Safe Vibration Levels

Structure Type	Maximum PPV (inches per second)
Standard Construction (Timber, Frame, Brick, and Concrete Buildings)	**2.0 (frequency >40)**
Reinforced Concrete Structures	**4.0**
Steel Structures	**4.0**
Buried Utilities	**4.0**
New SFOBB Bridge East Span	**20.0**

Vibration Level for New Bridge

The majority of new bridges are designed to withstand an earthquake impact of 7.3 magnitude. This is approximately equivalent to a peak particle velocity of 28 inches per second at a one hertz earthquake frequency or 56 inches per second for a 0.5 hertz earthquake frequency.

The allowable ground vibration level of 20 ips for blast design purposes is considered conservative. An earthquake would impact the entire bridge for seconds at these Richter levels where the blast is a localized, transient, high frequency event lasting only milliseconds.

For existing residential and commercial buildings the maximum vibrations levels allowed will be as indicated in Table 1.

Lewis L. Oriard has shown through his extensive research that the following levels are required to cause damage to massive concrete:

Damage	Strain (µin/in)	PPV (ips)
Static	140	20
grout spall	700	100
Skin spall	1300	200
Cracking	2400	375

(Lewis L. Oriard, "Explosives Engineering,Construction Vibrations and Geotechnology", Chapter 11, pages 415-416, 420-422, 444-454.)
(David E Siskind, "Vibrations from Blasting", International Society of Explosives Engineers, Cleveland OH (2000) pages 63-64.)

The estimated resultant ground vibration levels (PPV) at the closest pier of new bridge is 0.03 inches per second. (Equation used: 24.2(d/w^.5)^-1.6)

Air Blast and Noise Control

Appropriate blast hole patterns, detonation systems, stemming material, and blast mats will be used to prevent venting of blasts and to minimize airblast and noise levels produced by the blasting operations. The peak overpressure recorded for each blast will be included on the Blast Report.

Transportation and Storage of Explosives

Explosives will be delivered to the site by the explosives distributor in an approved truck licensed for the transportation of explosives in California. Explosives will be brought to a location pre-approved by the USCG for explosives off-load within BATF licensed magazines. The magazines will then be transferred to a barge, also pre-approved by the USCG for the transport of explosives over water. Under a USCG 4260 permit, the magazines will be taken to Pier E3. Explosives will be taken out of the magazines on an “as needed” basis and will be attended by an authorized person at all times. Once loading is complete the magazines, containing any unused explosives, will be transported back to the off-load area and be transferred back to the delivery truck for return to the distributor's storage facilities.

There will be no unattended on-site storage of explosives.

DEPARTMENT OF TRANSPORTATION U.S. COAST GUARD CG-4260 (Rev. 10-92)	APPLICATION AND PERMIT TO HANDLE HAZARDOUS MATERIALS *(See Instructions on Page 2.)*	Form Approved *OMB No.* 2115-0013

TO CAPTAIN OF THE PORT U.S. COAST GUARD _____	FROM *(Name, Business address and zip code)*

CARGO BY PROPER SHIPPING NAME	HAZARD CLASS OR DIVISION	STOWAGE (Vessel Only)	WEIGHT (Net Tons)
		TOTAL →	

	VESSEL OR BARGE	WATERFRONT FACILITY
NAME AND LOCATION		
NAME, ADDRESS AND ZIP CODE OF OWNER		
NAME, ADDRESS AND ZIP CODE OF AGENT OR CHARTERER		
DATE(S) AND TIME(S) OF OPERATION		

I UNDERSTAND and will comply with current safety laws, rules and regulations of the United States, the State, County, City and Port Authority while handling hazardous materials. *(See Page 2.)*

DATE	TITLE *(Authorized Company Representative)*	SIGNATURE

PERMIT

THE ABOVE REQUEST IS:

☐ APPROVED ☐ APPROVED WITH THE FOLLOWING CONDITIONS ☐ DISAPPROVED

EXCEPTIONS/CONDITIONS

DATE	SIGNATURE *(Captain of the Port, U.S. Coast Guard)*

INSPECTION *(VESSEL LOADING ONLY)*

The stowage of the cargo listed above has been inspected and accepted as satisfactory.

DATE	SIGNATURE AND POSITION *(Master/Mate/Person in Charge of Vessel)*

PREVIOUS EDITION IS OBSOLETE

INSTRUCTIONS

Submit original and one copy to the Captain of the Port having jurisdiction over the load/discharge location
(See 33 CFR Part 3)

This application and permit is required by the following regulations:

49 CFR 176.100 *(Military & Commercial Explosives, Division 1.1 and 1.2)*
49 CFR 176.415 *(Blasting Agents and Ammonium Nitrates)*
33 CFR 126.17 *(Military & Commercial Explosives, Division 1.1 and 1.2)*

Supplemental information required by the above regulations must be appended to this application.

"Proper Shipping Name" means the name of the cargo as given in 49 CFR 172.101. The "correct technical name" as given in the International Maritime Dangerous Goods Code published by IMO may be used as prescribed by regulation.

CONDITIONS

This permit is subject to the following conditions:

a. The limits as to maximum quantity, isolation, and remoteness established by local, municipal, territorial or state authorities having jurisdiction *(or the quantity of this permit)* shall not be exceeded by this operation. This permit does not authorize the violation of any applicable state or municipal law, ordinance, regulation or permit.

b. The Captain of the Port shall be notified immediately of any changes in quantity, times, dates, or of any matters that might affect the safe handling or transportation of the cargo covered by this permit.

c. All applicable laws and regulations, unless waived by the Captain of the Port, and all directions or orders of the Captain of the Port or his authorized representative, shall be complied with.

An agency may not conduct or sponsor, and a person is not required to respond to a collection of information unless it displays a valid OMB number.

The Coast Guard estimates that the average burden for this report is 1 hour. You may submit any comments concerning the accuracy of this burden estimate or any suggestion for reducing the burden to: Commandant (G-MOC), U.S. Coast Guard, Washington, DC 20593-0001, Project (2115-0013).

TRANSPORTATION OVER WATER INSPECTION CHECKLIST

SUBAQUEOUS BLASTING ACTIVITY

Contractor: _____ Date of Inspection: _____
Project: _____ Activity Inspected: _____
Location: _____ Approved By: _____
Phase/Area: _____ Inspected By: _____
Contract No: _____ _____

DATE	TOPIC	Y	N	N/A
	33 CFR 6.12 SUPERVISION AND CONTROL OF EXPLOSIVES OR OTHER DANGEROUS CARGOES.			
	6.12-1 GENERAL SUPERVISION & CONTROL			
	The Captain of the Port may supervise and control the transportation, handling, loading, discharging, stowage, or storage of hazmat on board vessels as covered by the regulations in 49 CFR Parts 170-189, 46 CFR 150-156, 46 CFR parts 170-189, 46 CFR 150-156, 46 CFR Parts 146-148 and the regulations governing tank vessels (46 CFR Parts 30-39)			
	33 CFR 126.16 CONDITIONS FOR DESIGNATING A "FACILITY OF PARTICULAR HAZARD"			
	(a) BASIC REQUIREMENTS. The facility shall comply with all the conditions in 33 CFR 126.15 except where specifically waived by 33 CFR 126.11.			
	(b) WARNING ALARMS. Warning alarms shall be installed at the waterside facility to warn approaching or transiting water traffic of immediate danger in the event of fire or cargo release. Warning alarms shall be of the siren type, or the emergency rotating flashing light type, and be sufficient intensity to be heard, or seen, a distance of 1 mile during normal facility working conditions. The alarm signal shall not conflict with local municipal prescription.			
	46 CFR 25.30 FIRE EXTINGUSHING EQUIPMENT			
	(a) The provisions of this subpart with the exception of 25.30-90, shall apply to all vessels contracted for on or after November 19,1952. Vessels contracted for or prior to that date shall meet the requirements of 25.30-90.			
	25.30-10			
	(b) All required portable and hand held extinguishers shall be of the BRAVO type; i.e. suitable foe fighting fires involving flammable liquids.			
	25.30-15			
	(a) When a fixed fire extinguishing system is installed, it shall be of an approved carbon dioxide type.			
	25.30-20			
	(b) MOTOR VESSELS. All motor vessels shall carry at least the minimum number of hand held portable extinguishers as set forth in Table 25.30-20 (b) (1) of 46 CFR 25.30			
	33 CFR 175.201 VENTILATION			
	No person shall operate a boat built after July 31,1980, that has a gasoline engine for electrical generation, mechanical power, or propulsion unless it is equipped with an operable ventilation system.			

© Copyright 2009 CDB and Contract Drilling & Blasting LLC All Rights Reserved

	49 CFR 176.60 "NO SMOKING" SIGNS			
	When smoking is prohibited during the loading, stowing, storing, transportation, or unloading of hazmat by this part, the carrier and the master of the vessel are jointly responsible for posting "NO SMOKING" signs in conspicuous locations.			
	SUBPART G- DETAILED REQUIREMENTS FOR EXPLOSIVES			
	49 CFR 176.100 PERMIT FOR CLASS "A"			
	Before a shipment of class A explosive may be discharged from, loaded, handled, or restored on board a vessel at any place in the U.S.A., it's territories, or it's possessions (except for the Panama Canal Zone). The carrier must obtain a permit from the Captain of the Port or his authority's representative.			
	49 CFR 176.105 LOADING AND UNLOADING OF EXPLOSIVES			
	(a) In any particular port, Class A or Class B explosives (except special fireworks), may not be loaded on a vessel until all other cargo has been loaded on board a vessel. No explosives may be loaded or unloaded at the same time that other cargo is being handled.			
	(b) All explosives must be handled carefully. Packages of explosives may not be thrown, dropped, rolled, dragged, or slid over each other or over the deck.			
	(c) Packaged Class A explosives must be loaded and discharged from a vessel by using a chute as provided for in 49CFR 176.163 or by a mechanical pallet, skipboard, tray or pie pallet, fitted with a cargo net or sideboards. A stuffed mattress at least 4 feet wide by 6 feet long and at least 4 inches thick, or a heavy hemp or jute mat of these dimensions, must be used for depositing explosives lifted by mechanical means or slide down a chute. The maximum load handled in a pallet, skipboard, tray, or pie plate may not exceed 2,640 pounds. A rope net sling with a pallet, skipboard, pie plate or similar base must be loaded so that a minimum displacement of items occurs when it is lifted; the cargo net must completely encompass the cotton and sides of the load. Not more than one third dimension of any package may extend above the sideboard of a tray. (A landing mattress and cargo net are not needed for palletized Class A explosives)			
	(d) Detonators, detonating primers, detonating fuses, fulmate or mercury, and other initiating or priming explosives defined in this subchapter constitute distinct types of explosives. They must be handled with extreme care. A chute and mattress may not be used when loading or discharging this type of explosive.			
	(e) A "can" hook may not be used for raising or lowering a barrel, drum, or other container of explosives.			
	(f) A fire hose of sufficient length to cover the area of the loading operation and connected with adequate water supply must be laid out and read for use.			
	49 CFR 176.110 CONDITION OF PACKAGE			
	A package of explosive which is damp, moldy, stained, or in any condition that indicates leakage may not be transported by vessel. The shipper must substantiate any claim that a stain is due to accidental contact with grease, oil, or similar substance. In case of doubt, the package may not be transported.			
	49 CFR 176.115 ON DECK STORAGE OF EXPLOSIVES			
	(a) The following requirements apply to the stowage of explosives on deck:			
	(1) An explosive may not be stowed on or under a bridge deck.			

© Copyright 2009 CDB and Contract Drilling & Blasting LLC All Rights Reserved

	49 CFR 176.115 ON DECK STORAGE OF EXPLOSIVES Continued			
	(2) An explosive may not be stowed nearer than 25 feet in a horizontal plane to the crews quarters.			
	(b) Explosives being transported on deck on a vessel between receiving points within the same harbor, bay, sound, lake, or river including explosive anchorages must be covered with a fire resistant or flame-proof tarpaulin securely lashed in place.			
	49 CFR 176.120 PREPERATION OF DECKS, GANGWAYS, HATCHES, AND CARGO PORTS			
	(a) All decks, gangways, and hatches over or through which explosives must be freed of all loose material and must be swept broom clean before loading and unloading.			
	(b) All hatches and cargo ports opening into a compartment which any explosive are stowed must be kept closed, except during loading or unloading of the compartment. After loading, hatches must be securely closed against weather. If tarpaulins are used, They must be securely battened.			
	49 CFR 176.130 SECURING AND DUNNAGING OF PACKAGEING OF EXPLOSIVES			
	(a) Each package of explosives must be secured and dunnaged to prevent movement in any direction. Vertical restraints are not required if the shape of the package and the stuffing pattern precludes shifting of the load.			
	(b) Each keg of black powder must be stowed in an upright position with the bungs up and each tier must be completely dunnaged.			
	(c) Each package of explosives must be braced and dunnaged so that it is not likely to be pierced by the dunnaging or crushed by any superimposed weight.			
	33 CFR 126.19 ISSUANCE OF PERMITS FOR HANDLING DESIGNATED DANGEROUS CARGO			
	(a) Upon the application of the owners or operators of a designated waterfront facility or of their authorized representatives, the Captain of the Port is authorized to issue a permit for each transaction of handling, loading, discharging, or transporting designated dangerous cargo at such waterfront facility provided the following requirements are met:			
	(1) The facility shall comply in all respect with the regulations in this subchapter.			
	(2) The quantity of designated dangerous cargo, except military explosives shipped by or for the Armed Forces of the United States, on the waterfront facility and vessels moored thereto shall not exceed the limits as to maximum quantity, isolation and			
	46 CFR 67.45 FAILURE TO HAVE CERTIFICATE ONBOARD			
	(a) The person in command of a documented vessel must have on board that vessel the Certificate of Documentation.			
	46 CFR 25.25 PERSONAL FLOTATION DEVICES			
	(a) No person may operate a vessel to which this subpart applies unless it meets the requirements of this subpart.			
	(b) Each vessel not carrying passengers for hire, less than 40 feet in length must have at least one life preserver (Type I PFD), buoyant vest (Type II), or marine buoyant intended to be worn (Type III PFD) for each person on board.			

© Copyright 2009 CDB and Contract Drilling & Blasting LLC All Rights Reserved

	(c) Each vessel carrying passengers for hire and each vessel 40 feet in length or longer not carrying passengers for hire must have at least one life preserver for each person aboard.			
	46 CFR 25.35-1 BACKFIRE FLAME CONTROL			
	(a) Every gasoline engine installed in a motorboat and motor vessel after April 25, 1940 shall be equipped with an acceptable means of backfire control.			
	(b) Installations made before November 19, 1952 need not meet the requirements of this subpart.			
	(e) The following are acceptable means of backfire flame control:			
	(1) An arrester built in accordance with Subpart 162.041 of Subchapter Q.			
	(2) An engine air and fuel induction system which provides adequate protection from propagation of backfire equal to an approved flame control.			
	(3) Any attachment to the carburetor or location of the engine air induction that disperses flames in such a manner as not to endanger the vessel.			
	(4) Vessels having an integrated engine-vessel design shall be tested and labeled in accordance with the specifications contained in Subpart 162.043 of Subchapter Q and shall be specifically approved by Commandant.			
	33 CFR 155.450 PLACARD			
	(a) A ship, except a ship of less than 26 feet in length must have a placard of at least 5 by 8 inches made of a durable material, fixed in a conspicuous place in each machinery space or at the bilge and ballast pump control station.			
	33 CFR 151.59 PLACARDS			
	(b) The master of each ship shall ensure that one or more placards meeting the requirements of this section are displayed in prominent locations.			

© Copyright 2009 CDB and Contract Drilling & Blasting LLC All Rights Reserved

SAFETY AND ACTIVITY HAZARD ANALYSIS

PRINCIPAL STEP	POTENTIAL HAZARD	RECOMMENDED CONTROLS
TRANSPORTATION OF EXPLOSIVE MATERIALS	Fire	Vehicles transporting explosive materials shall be equipped with one or more fire extinguishers of a type listed by a nationally recognized test laboratory.
	Fire	Persons engaged in the transportation, handling, or other use of explosive materials shall not smoke, carry matches, firearms, ammunitions, or flame producing devices.
	Poor Visibility	Display all placards, lettering, or numbering required.
	Premature Detonation	Explosives shall not be transported with any other materials, cargoes, or crew members.
	Premature Detonation	Blasting caps shall not be transported in the vehicle with other explosives.
	Premature Detonation	No other items shall be carried in the bed or body of any vehicle transporting explosive materials.
	Premature Detonation	Transportation of explosives from land to a watercraft shall be done in certified and approved magazines and shall be supervised by the CA licensed blaster.
	Theft of Product	Vehicles transporting explosive materials shall not be left unattended. All magazines are to be kept locked except during the transfer. In the event of loss or theft of product Contractor shall report all incidents with details to the BATF and police.
	Vehicle Accident	In case of an accident, Notification Instructions and Procedures on Securing an Accident Scene will be kept in the vehicle at all times**.**
	Vehicle Failure	Vehicle shall not be loaded beyond rated capacity and the products shall be secured to prevent shifting. Vehicles will be inspected and found satisfactory for transportation of explosive materials.
	Vehicle Failure	Operators of the vehicles shall be physically fit, careful, reliable, and able to read, write, and understand instructions in the English language.
	Vehicle Failure	Vehicles transporting explosive materials shall be in good repair.
	Vehicle Failure	Only the authorized driver and his/her helper shall be permitted to ride on any truck carrying explosive materials.
HANDLING OF EXPLOSIVE MATERIALS	Fire	Magazines used for the storage of detonators shall be separated from magazines storing other explosive materials by the appropriate distance or approved barrier.
	Fire	Smoking matches, firearms, open flames, or any flame producing device shall not be permitted within 50 feet of any magazine.
	Fire	Smoking will be allowed only in a designated smoking area.
	Premature Detonation	Only authorized and qualified persons shall be allowed to handle and use explosives.
	Premature Detonation	Containers shall be opened only with non-sparkling tools or instruments.
	Premature Detonation	Explosive materials shall be removed from containers only as they are needed for use.
	Premature Detonation	Explosive materials and/or primers shall be separated and taken to the blasting area in their original containers.

SAFETY AND ACTIVITY HAZARD ANALYSIS

PRINCIPAL STEP	POTENTIAL HAZARD	RECOMMENDED CONTROLS
	Premature Detonation	Primers shall not be made up in excess of immediate need for holes to be loaded.
	Premature Detonation	Primers should be made up at the "site specific" Pier Location.
	Premature Detonation	Detonators, primers, or other initiators shall not be stored in the same magazine with explosives, or blasting agents.
	Premature Detonation	Magazines in which explosive materials are stored shall not be used for any other purposes.
	Theft of Materials	After loading a blast, all excess explosive materials and detonators shall be returned to the magazine day storage box. Inventory records shall be updated at the close of business each day.
DAILY INVENTORY JUSTIFICATION	Theft of Materials	Explosive materials and related materials shall be stored in approved containers.
	Theft of Materials	Magazines are to be kept locked at all times and the keys in the possession of the Licensed blaster or the explosives delivery truck driver.
DRILLING AND BLASTING	Drilling into Loaded Holes	Drilling and loading of holes shall not be carried on in the same immediate areas.
	Personal Injury	Personnel unnecessary for the operation are not allowed in the Blast Area.
	Personal Injury	Trained individuals under the "direct" supervision of a qualified person shall perform drilling and loading.
	Personal Injury	Safety glasses and hearing protection shall be worn while in a drilling environment.
	Personal Injury	The walking surface from the magazines to the Blast Area shall be free of trip hazards and obstructions.
	Personal Injury	Standard audible signals shall be used to warn of a blasting operation (see Warning Signs).
	Personal Injury	Explosive materials shall not be transported during crew changes.
	Personal Injury	In the event of a thunderstorm, loading of charges shall cease and the *Lightning Present Procedure* should be followed. Continuous monitoring for potential/actual thunderstorms shall be ongoing.
	Premature Detonation	Explosive materials shall only be removed from their containers for immediate intended use.
	Premature Detonation	Primers shall not be made up in or near magazines and shall be made up on an “as needed basis.”
	Product Failure	All drill holes shall be of a greater diameter than the cartridges.
	Product Failure	Magazines shall be kept clean and dry at all times.
	Product Failure	Explosive materials shall be arranged so the oldest stock will be used first.

SAFETY AND ACTIVITY HAZARD ANALYSIS

PRINCIPAL STEP	POTENTIAL HAZARD	RECOMMENDED CONTROLS
LOADING FOR BLASTING	Product Failure	Explosive materials shall be stored in their original containers lying flat.
	Personal Injury	Explosives will be delivered directly to the site by explosives distributor..
	Personal Injury	The Blast Area shall be kept free of any equipment, operations, or persons not essential to the loading process.
	Personal Injury	Tamping shall be done with an approved non-sparking loading pole.
	Personal Injury	Primers shall not be tamped.
	Personal Injury	Cartridges or boosters shall be primed only in the number required for a single round.
	Personal Injury	No detonator shall be inserted in explosive materials without a cap well or without first making a hole in the cartridge with a non-sparking tool of proper size.
	Personal Injury	No explosive material or loaded hole shall be left unattended.
	Personal Injury	No holes shall be loaded except those to be fired in the designated blast. The blast shall not be detonated until all personnel are accounted for.
	Premature Detonation	Holes will not be loaded in the prospect of thunderstorms indicated by the National Weather Service, Coast Guard, or static electricity detected by the lightning detector.
	Vibration Control	Loaded holes or charges shall be verified and documented on the Drill Log and Blast Report before firing.
	Vibration Control	Loaded holes shall be stemmed to the collar with non-combustible materials as designed.
FIRING		
	Misfire	The person attaching the lead-in connections shall fire the shot.
	Personal Injury	Prior to the firing of the shot, all persons in the Blast Area shall be warned of the blast.
	Personal Injury	The blast shall not be fired until it is certain that everyone has retreated to a safe position and are accounted for.
	Personal Injury	All blasting operations shall use signals as stated in the blast plan.
	Personal Injury	Prior to each shot, security shall be posted at designated locations.
INSPECTION	Premature Detonation	Accidental detonation is avoided by strict adherence to safe blast procedures.
	Personal Injury	Immediately after the blast has been fired, the lead-in shall be disconnected from the blast machine.
	Personal Injury	An inspection of the tattletale shall be made by the blaster to determine that all charges have been detonated.
MISFIRE	Personal Injury	Other persons shall not be allowed to return to the Blast Area until an All Clear is given.

SAFETY AND ACTIVITY HAZARD ANALYSIS

PRINCIPAL STEP	POTENTIAL HAZARD	RECOMMENDED CONTROLS
	Detonation Failure	Misfires shall be handled under the direction of the CA Licensed blaster.
	Detonation Failure	No other work is to be done except that which is necessary to correct the hazard of the misfire.
SPECIFIC HAZARDS		
	Loss/Injury to Eyesight	Eye protection is available for grinding, brazing, welding and drilling operations.
	Loss/Injury to Hearing	Hearing protection shall be worn in identified noise hazard areas.
	Personal Injury	Eyewash stations and proper protective gear will be available at all times.
	Personal Injury	Employees are required to wear hard hats, safety glasses, safety boots at all times. PFD's will be worn when within 6 feet of open water.
	Respiratory Failure	Respiratory protection is issued for specific hazards.

CONCLUSION:
Hazards and preventative measures are not limited to this plan. Continuous efforts will be made to observe for hidden hazards and correct them with immediate and proper action.

Contingency Plan

CONTINGENCY PLAN

The Pier E3 blast design, explosive product selection, and the choice of using electronic detonators lend to the blasting of Pier E3 being a success. Weather can not be controlled. Lightning detection equipment will be used during the entire time that explosives are on site at Pier E3. When an electrical storm is detected and presents a hazard to the safety of personnel the following procedure shall be followed:

1) Notify the Project manager of the potential hazard.
2) Terminate all loading of explosives into boreholes and return explosive to the magazines.
3) Clear the 500' danger zone of all vessels and personnel.
4) The lightning detection equipment shall be taken with the personnel to continuously monitor the conditions.
5) The danger zone shall be visually monitored to ensure no vessels or personnel have re-entered the danger zone while the hazard still exists.
6) Resume operations only after all potental hazards have passed. All other applicable safety requirements shall be implemented in addition to those required above.

A misfire is highly unlikely due to the type of detonators being used for the blasting of Pier E3. The electronic detonation system will check the integrity of each individual electronic detonator when prompted by the blaster and identify "bad" detonators. This check allows the blaster the ability to correct a problem while charging holes and again before firing the shot. Additionally, the redundant use of detonators (i.e., two per deck/hole) ensures the detonation of explosives will occur. However, in the event of a misfire, the blaster in charge will notify the Project manager and take the following actions.

1) The blaster will maintain the secure 500' danger zone while he conducts an inspection to determine conditions and cause.
2) If the inspection indicates only that the lead line has malfunctioned, a new lead line will be installed and the shot re-fired.
3) If the inspection indicates that a portion of the shot misfired, hence a cut-off has occurred, the following procedure shal be implemented:
   a) The blaster will maintain the danger zone and restrict enry for ½ hour.
   b) The blaster and only personnel authorized by him will re-enter the blast area to rectify the problem.
   c) If all downlines are intact where a surface connection failed, a new connection will be made, all zones re-secured, and the shot re-fired.
   d) If the misfire cannot be safely re-energized and re-fired, the blaster will maintain security of the 500' danger zone. The blaster will contact the technical representative of the explosives manufacturing company to consult on how to best handle the situation. Once the contingency plan has been confirmed, the blaster will advise the Project manager of the appropriate procedure.
4) When the misfire has been corrected, the blaster will notify the Project manager of an "all clear".

APPENDIX B: Blast Attenuation System Details

Copyright © BergerABAM. All Rights Reserved.

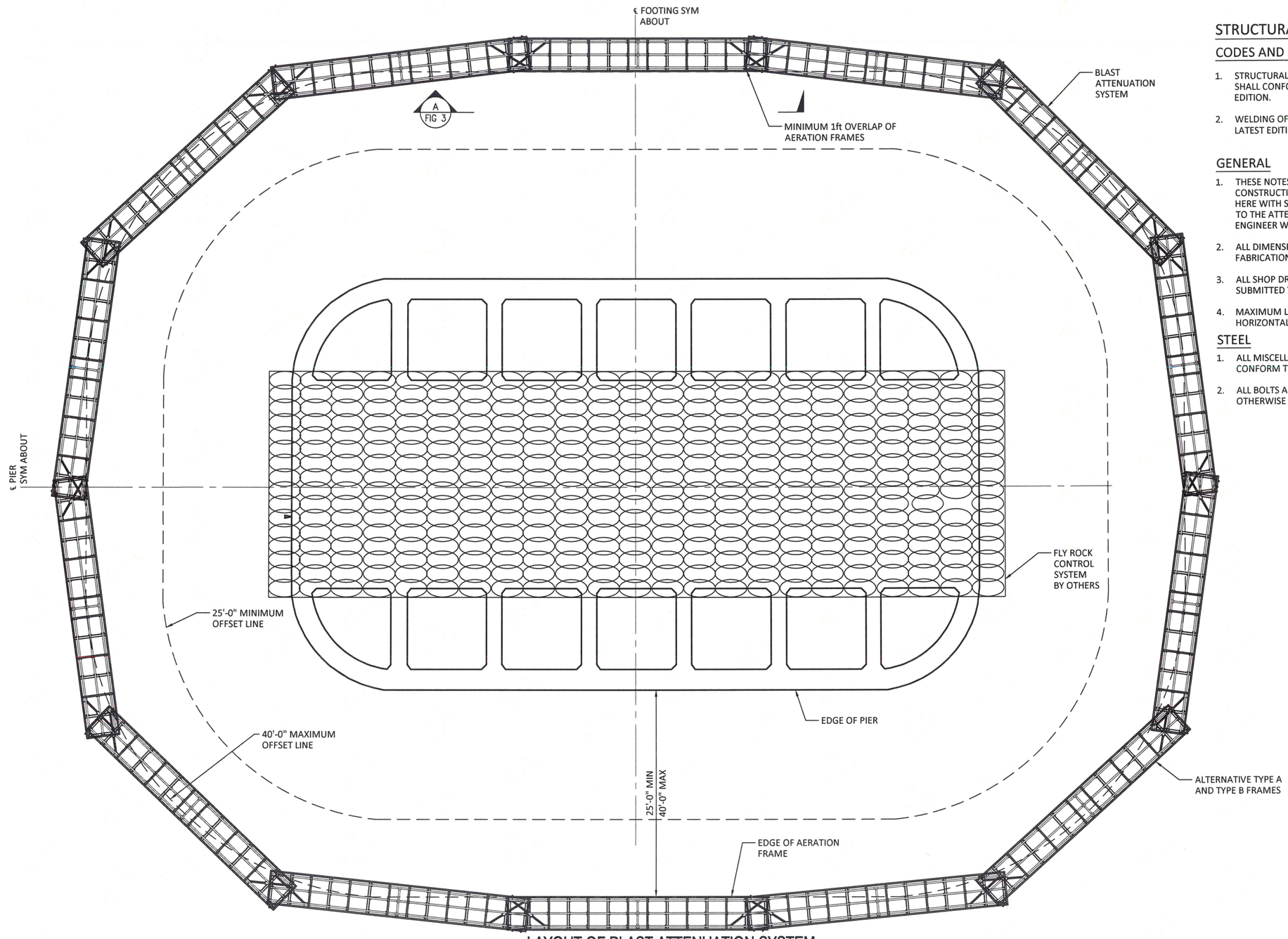

LAYOUT OF BLAST ATTENUATION SYSTEM

SCALE: 1"=10'-0"(34x22) 1"=20'-0"(11x17)

1" = 10' 10 0 10 20 scale feet

STRUCTURAL NOTES

CODES AND STANDARDS

1. STRUCTURAL AND MISCELLANEOUS STEEL FABRICATION AND ERECTION THEREOF SHALL CONFORM TO THE "AISC MANUAL OF STEEL CONSTRUCTION," FOURTEENTH EDITION.
2. WELDING OF STRUCTURAL AND MISCELLANEOUS STEEL SHALL CONFORM TO THE LATEST EDITION OF "STRUCTURAL WELDING CODE - STEEL" (AWS D1.1).

GENERAL

1. THESE NOTES CONTAIN GENERAL INFORMATION AND ARE NOT COMPLETE FOR CONSTRUCTION PURPOSES. CONTRACTOR SHALL VERIFY INFORMATION GIVEN HERE WITH SPECIFICATIONS AND OTHER DOCUMENTS AND BRING ANY CONFLICTS TO THE ATTENTION OF THE ENGINEER BEFORE BEGINNING AFFECTED WORK. THE ENGINEER WILL RESOLVE ANY SUCH CONFLICT.
2. ALL DIMENSIONS AND DETAILS SHALL BE VERIFIED BY THE CONTRACTOR PRIOR TO FABRICATION AND CONSTRUCTION.
3. ALL SHOP DRAWINGS AND MATERIAL CERTIFICATIONS FOR STEEL, SHALL BE SUBMITTED TO AND REVIEWED BY THE ENGINEER PRIOR TO FABRICATION.
4. MAXIMUM LOAD AT EACH PICK POINT = 20,000 LBS VERTICAL AND 9000 LBS HORIZONTAL.

STEEL

1. ALL MISCELLANEOUS STEEL SHAPES AND PLATES, EXCEPT AS NOTED BELOW, SHALL CONFORM TO ASTM A 36, FY = 36 KSI
2. ALL BOLTS AND NUTS SHALL CONFORM TO ASTM A 307, UNLESS SPECIFICALLY NOTED OTHERWISE ON THE DRAWINGS.

MARK	REVISION DESCRIPTION	BY	APP.	DATE

BergerABAM
33301 9th Avenue South, Suite 300
Federal Way, Washington 98003-2600
(206) 431-2300 Fax: (206) 431-2250

KIEWIT/MANSON, AJV

REGISTERED PROFESSIONAL ENGINEER MICHAEL G. WRIGHT NO. 46359 EXP. 12-31-16 CIVIL STATE OF CALIFORNIA 2-9-15

DRAWN BY MDB
DESIGN BY MGW
CHECK BY EWO
PROJ MGR MGW

KIEWIT/MANSON
SFOBB EAST SPAN DISMANTLING PROJECT
BUBBLE CURTAIN DESIGN

LAYOUT OF BUBBLE CURTAIN FRAME SIGMENTS

DRAWING NO. FIG-1
PROJECT NO. A15.0136.00
DATE: 2/9/15
SHEET NO. 1 OF 7

Last Saved by: Eros on: Feb 10, 2015 10:14 AM File: Q:\FederalWay\2015\A15.0136\00\CADD\Dwgs\01_Fig01.dwg

Copyright © BergerABAM. All Rights Reserved.

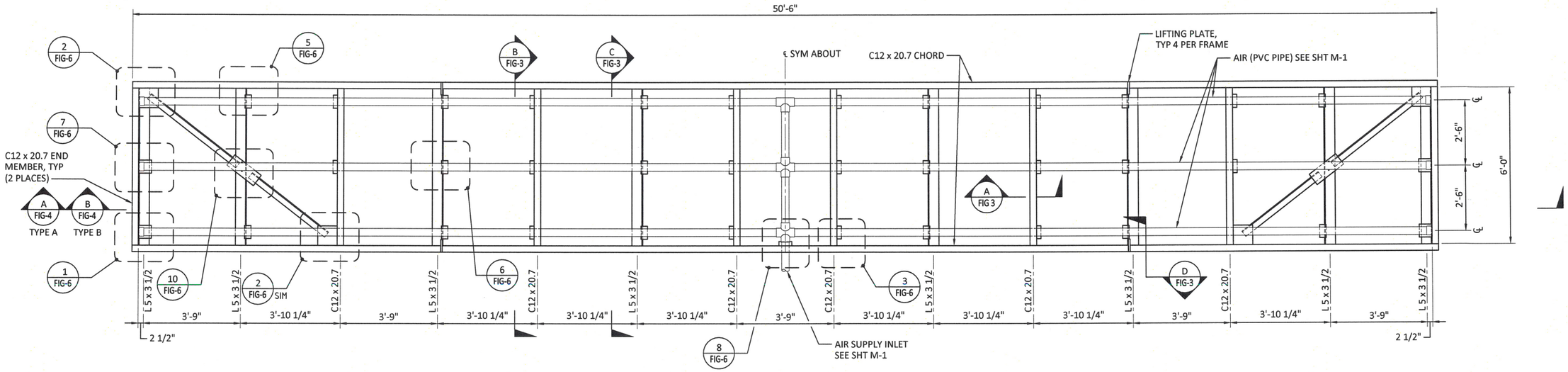

PLAN - AERATION FRAME TYPE A (TYPE B SIMILAR)

SCALE: 1/2"=1'-0"

1/2" = 1'-0" 2 0 2 4 scale feet

MARK	REVISION DESCRIPTION	BY	APP.	DATE

BergerABAM
33301 9th Avenue South, Suite 300
Federal Way, Washington 98003-2600
(206) 431-2300 Fax: (206) 431-2250

KIEWIT/MANSON, AJV

2-9-15

REGISTERED PROFESSIONAL ENGINEER MICHAEL G. WRAY NO. 46359 EXP. 12-31-16 CIVIL STATE OF CALIFORNIA

DRAWN BY MDB
DESIGN BY MGW
CHECK BY EWO
PROJ MGR MGW

KIEWIT/MANSON
SFOBB EAST SPAN DISMANTLING PROJECT
BUBBLE CURTAIN DESIGN

FRAME DETAILS

DRAWING NO. FIG-2
PROJECT NO. A15.0136.00
DATE: 2/9/15
SHEET NO. 2 OF 7

Last Saved by: Enos on: Feb 9, 2015 2:19 PM File: Q:\FederalWay\2015\A15.0136\00\CADD\Dwgs\01_Fig02.dwg

Copyright © BergerABAM. All Rights Reserved.

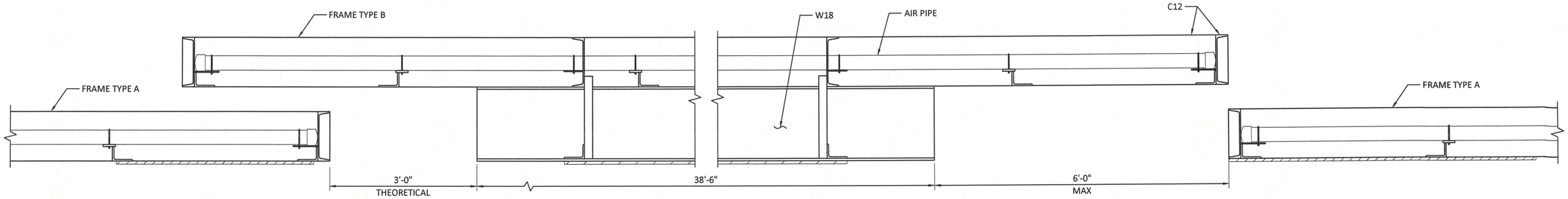

A FIG-1 **ELEVATION**
SCALE: 1"=1'-0"

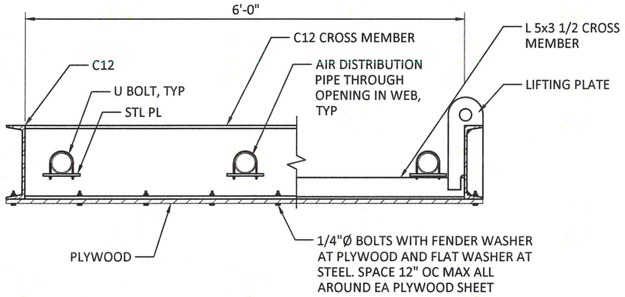

NOTE:
FOR FRAME TYPE B, SEE D -

B FIG-2 **SECTION - FRAME TYPE A**
SCALE: 1"=1'-0"

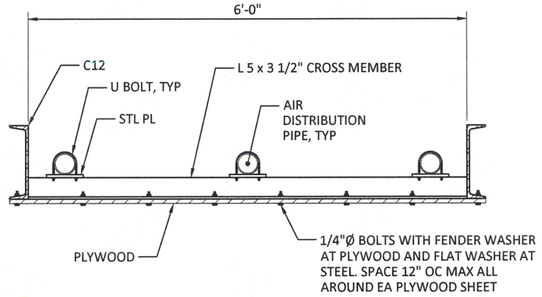

C FIG-2 **SECTION - FRAME TYPE A**
SCALE: 1"=1'-0"

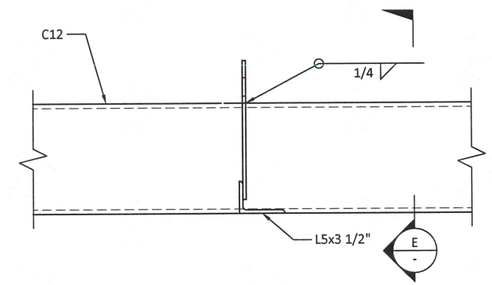

D FIG-2 **SECTION - LIFTING PLATE**
SCALE: 1 1/2"=1'-0"

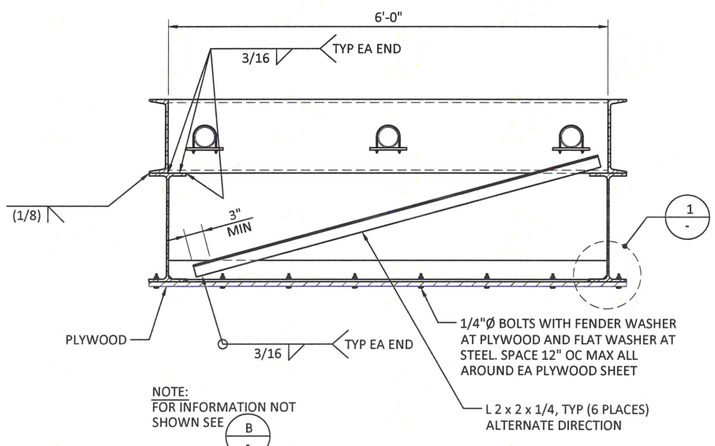

NOTE:
FOR INFORMATION NOT SHOWN SEE B -

D - **SECTION - FRAME TYPE B**
SCALE: 1"=1'-0"

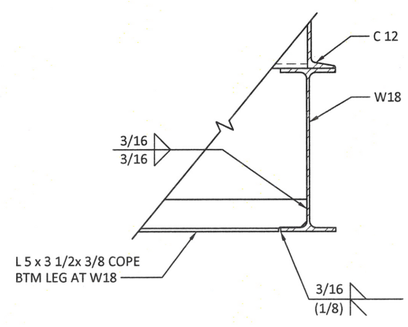

1 - **DETAIL**
SCALE: 1 1/2"=1'-0"

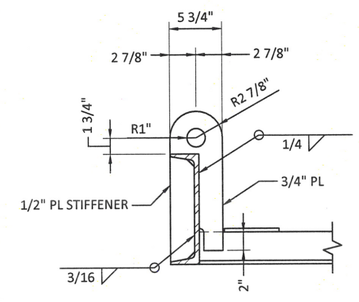

E - **SECTION**
SCALE: 1 1/2"=1'-0"

1" = 1'-0" scale 1 0 1 2 feet

1-1/2" = 1'-0" scale 8 0 8 16 inches

MARK	REVISION DESCRIPTION	BY	APP.	DATE

BergerABAM
33301 9th Avenue South, Suite 300
Federal Way, Washington 98003-2600
(206) 431-2300 Fax: (206) 431-2250

KIEWIT/MANSON, AJV

REGISTERED PROFESSIONAL ENGINEER MICHAEL G. WERA NO. 46359 EXP. 12-31-16 CIVIL STATE OF CALIFORNIA
2-9-15

DRAWN BY MDB
DESIGN BY MGW
CHECK BY EWO
PROJ MGR MGW

KIEWIT/MANSON
SFOBB EAST SPAN DISMANTLING PROJECT
BUBBLE CURTAIN DESIGN

FRAME DETAILS

DRAWING NO. FIG-3
PROJECT NO. A15.0136.00
DATE: 2/9/15
SHEET NO. 3 OF 7

Last Saved by: Enos on: Feb 9, 2015 2:19 PM File: Q:\FederalWay\2015\A15.0136\00\CADD\Dwgs\01_Fig03.dwg

Copyright © BergerABAM. All Rights Reserved.

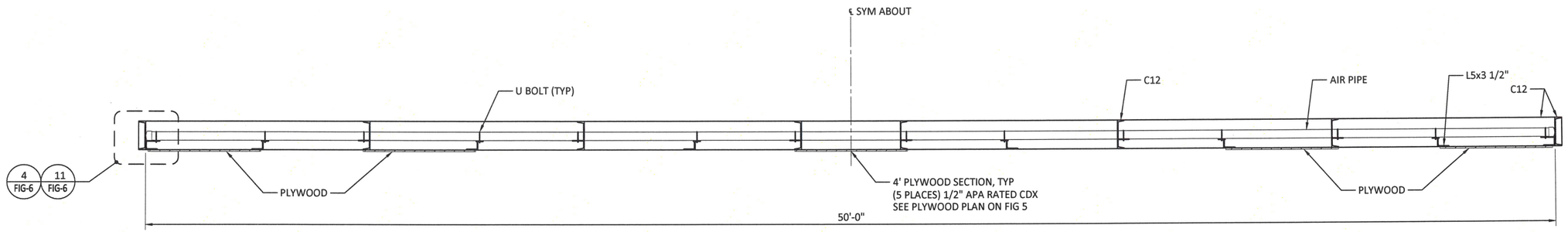

A FIG-2 **SECTION - TYPE A**
SCALE: 1/2"=1'-0"

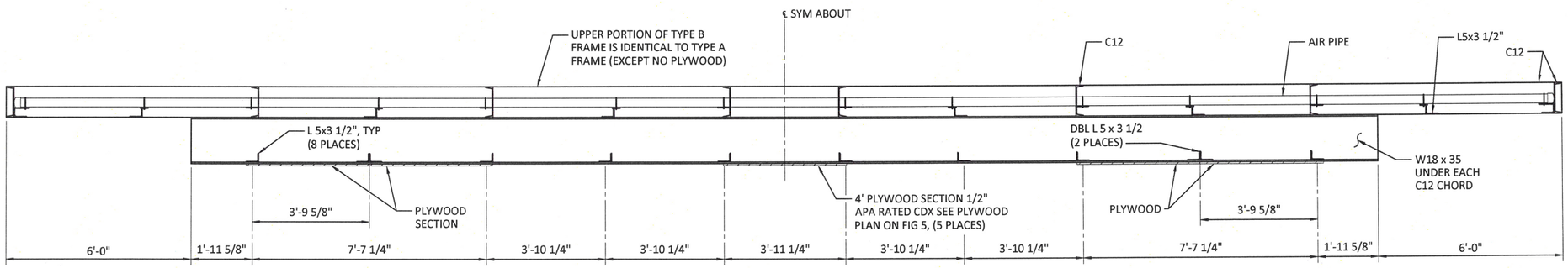

B FIG-2 **SECTION - TYPE B**
SCALE: 1/2"=1'-0"

1/2" = 1'-0" 2 0 2 4 scale feet

MARK	REVISION DESCRIPTION	BY	APP.	DATE

BergerABAM
33301 9th Avenue South, Suite 300
Federal Way, Washington 98003-2600
(206) 431-2300 Fax: (206) 431-2250

KIEWIT/MANSON, AJV

REGISTERED PROFESSIONAL ENGINEER MICHAEL G. WILLIAMS NO. 46350 EXP. 12-31-16 CIVIL STATE OF CALIFORNIA
2-9-15

DRAWN BY MDB
DESIGN BY MGW
CHECK BY EWO
PROJ MGR MGW

KIEWIT/MANSON
SFOBB EAST SPAN DISMANTLING PROJECT
BUBBLE CURTAIN DESIGN

FRAME DETAILS

DRAWING NO. **FIG-4**
PROJECT NO. A15.0136.00
DATE: 2/9/15
SHEET NO. 4 OF 7

Last Saved by: Enos on Feb 9, 2015 2:19 PM File: Q:\FederalWay\2015\A15.0136\00\CADD\Dwgs\01_Fig04.dwg

Copyright © BergerABAM. All Rights Reserved.

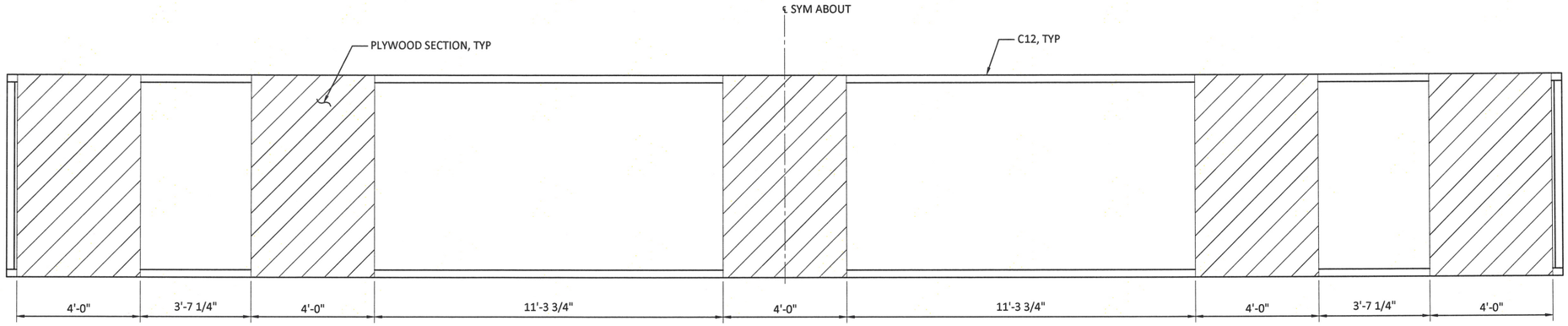

PLYWOOD PLAN - FRAME TYPE A (NO STAND OFF)

SCALE: 1/2"=1'-0"

NOTE:
AERATION FRAME MEMBER
NOT SHOWN FOR CLARITY

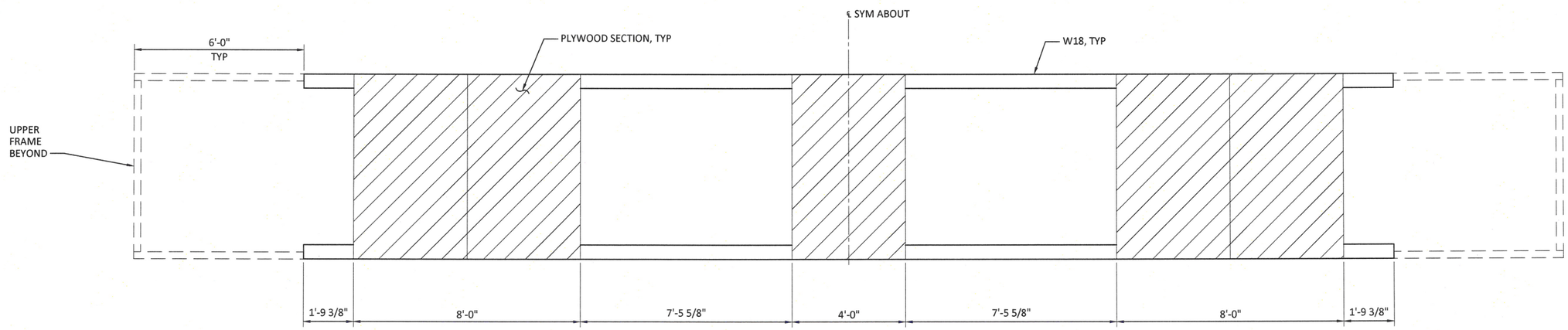

NOTE:
INTERNAL AERATION FRAME
MEMBERS NOT SHOWN FOR
CLARITY

PLYWOOD PLAN - FRAME TYPE B (W/W18 STAND OFFS)

SCALE: 1/2"=1'-0"

1/2" = 1'-0" 2 0 2 4 scale feet

MARK	REVISION DESCRIPTION	BY	APP.	DATE

BergerABAM
33301 9th Avenue South, Suite 300
Federal Way, Washington 98003-2600
(206) 431-2300 Fax: (206) 431-2250

KIEWIT/MANSON, AJV

2-9-15

REGISTERED PROFESSIONAL ENGINEER MICHAEL G. WRIGHT NO. 46359 EXP. 12-31-16 CIVIL STATE OF CALIFORNIA

DRAWN BY MDB
DESIGN BY MGW
CHECK BY EWO
PROJ MGR MGW

KIEWIT/MANSON
SFOBB EAST SPAN DISMANTLING PROJECT
BUBBLE CURTAIN DESIGN

FRAME DETAILS

DRAWING NO. FIG-5
PROJECT NO. A15.0136.00
DATE: 2/9/15
SHEET NO. 5 OF 7

Last Saved by: Enos on: Feb 9, 2015 2:19 PM File: Q:\FederalWay\2015\A15.0136\00\CADD\Dwgs\01_Fig05.dwg

Copyright © BergerABAM. All Rights Reserved.

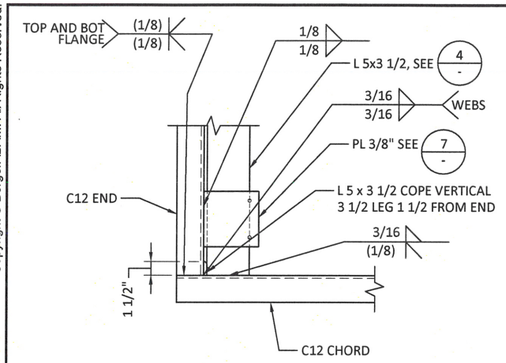

1 FIG-2 DETAIL- CORNER C12 TO C12
SCALE: 1 1/2"=1'-0"

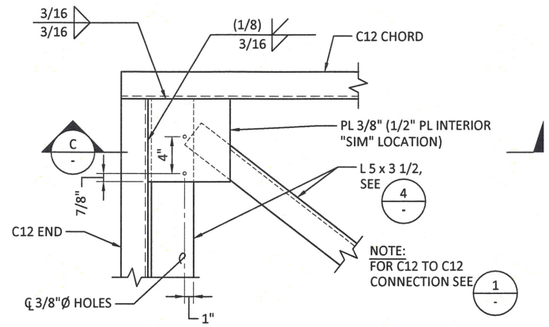

2 FIG-2 DETAIL - CORNER L 5 x 3 1/2 TO C12
SCALE: 1 1/2"=1'-0"

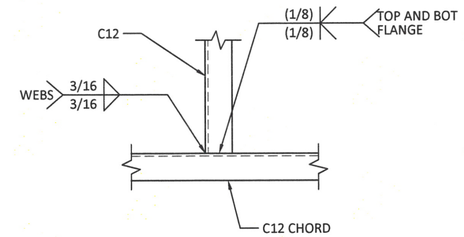

3 FIG-2 DETAIL - MID SPAN C12 TO C12
SCALE: 1 1/2"=1'-0"

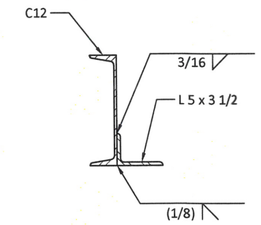

4 - DETAIL - END L 5 x 3 1/2 TO C12
SCALE: 1 1/2"=1'-0"

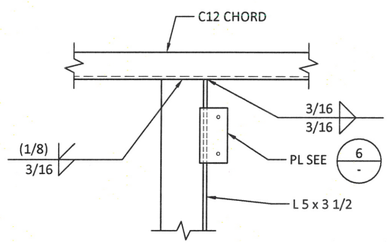

5 FIG-2 DETAIL- MID L 5 x 3 1/2 TO C12
SCALE: 1 1/2"=1'-0"

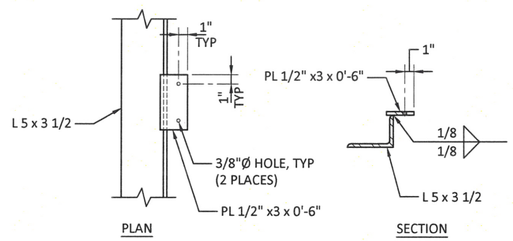

6 FIG-2 DETAIL- C4 BRACING @ C4
SCALE: 1 1/2"=1'-0"

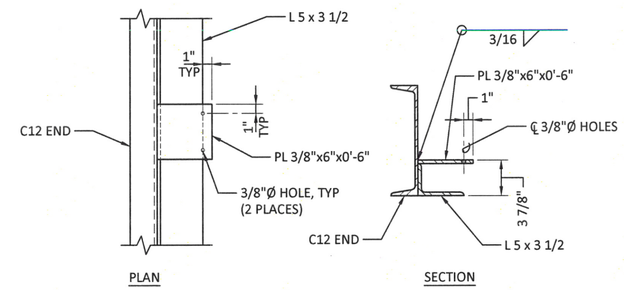

7 FIG-2 DETAIL - PLATE TO END C12
SCALE: 1 1/2"=1'-0"

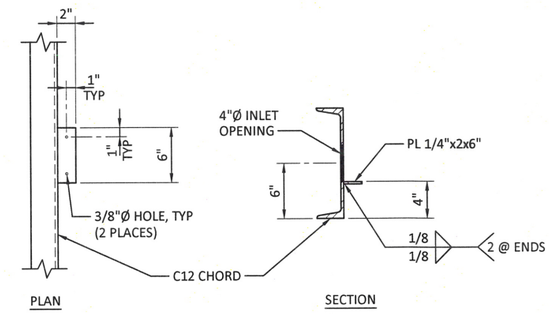

8 FIG-2 DETAIL - PLATE TO C12
SCALE: 1 1/2"=1'-0"

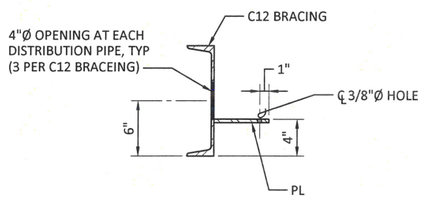

A FIG-2 SECTION - C12
SCALE: 1 1/2"=1'-0"

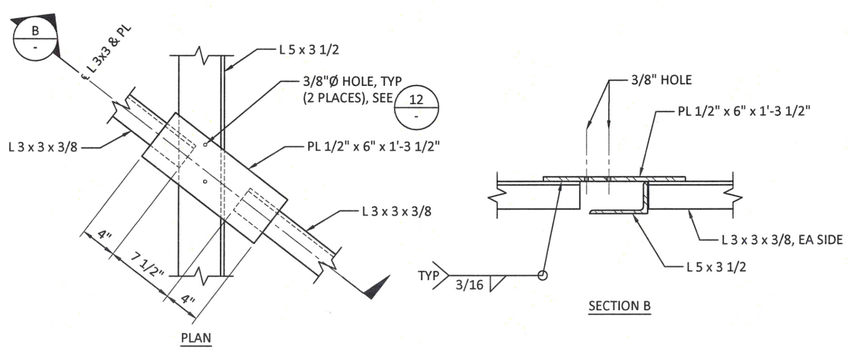

10 FIG-2 DETAIL - DIAGONAL MID SPAN CONNECTION
SCALE: 1 1/2"=1'-0"

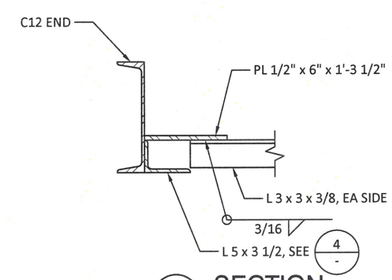

C - SECTION
SCALE: 1 1/2"=1'-0"

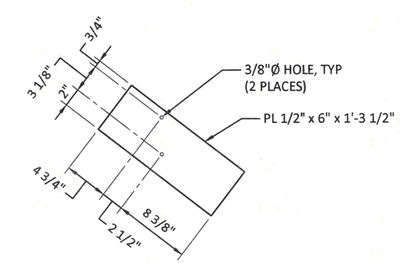

12 - DETAIL - DIAGONAL PLATE
SCALE: 1 1/2"=1'-0"

1-1/2" = 1'-0" 8 0 8 16 scale inches

MARK	REVISION DESCRIPTION	BY	APP.	DATE

BergerABAM
33301 9th Avenue South, Suite 300
Federal Way, Washington 98003-2600
(206) 431-2300 Fax: (206) 431-2250

KIEWIT/MANSON, AJV

2-9-15

REGISTERED PROFESSIONAL ENGINEER MICHAEL G. WRATTEN NO. 46359 EXP. 12-31-16 CIVIL STATE OF CALIFORNIA

DRAWN BY MDB
DESIGN BY MGW
CHECK BY EWO
PROJ MGR MGW

KIEWIT/MANSON
SFOBB EAST SPAN DISMANTLING PROJECT
BUBBLE CURTAIN DESIGN

FRAME DETAILS

DRAWING NO. FIG-6
PROJECT NO. A15.0136.00
DATE: 2/9/15
SHEET NO. 6 OF 7

Last Saved by: Ernos on: Feb 9, 2015 2:19 PM File: Q:\Federal\Way\2015\A15.0136\00\CADD\Dwgs\01_Fig\06.dwg

Copyright © BergerABAM. All Rights Reserved.

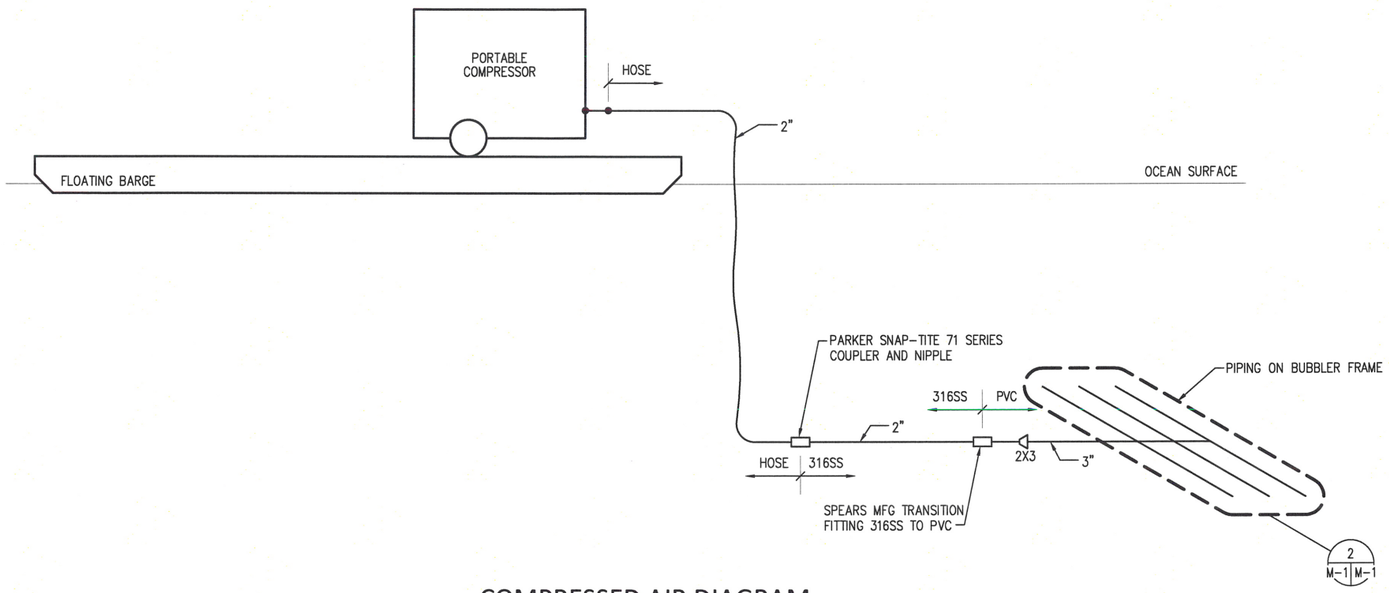

COMPRESSED AIR DIAGRAM

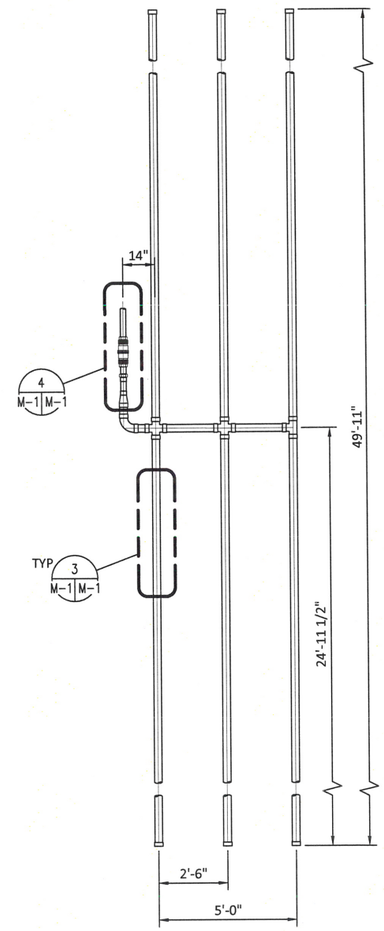

AIR BUBBLER PIPING ENLARGED PLAN 2 M-1 M-1

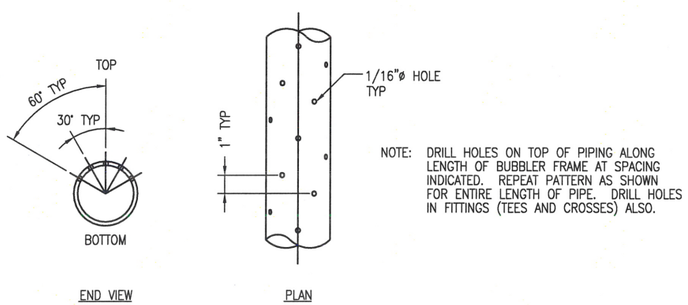

NOTE: DRILL HOLES ON TOP OF PIPING ALONG LENGTH OF BUBBLER FRAME AT SPACING INDICATED. REPEAT PATTERN AS SHOWN FOR ENTIRE LENGTH OF PIPE. DRILL HOLES IN FITTINGS (TEES AND CROSSES) ALSO.

BUBBLER HOLE LOCATION DETAIL 3 M-1 M-1

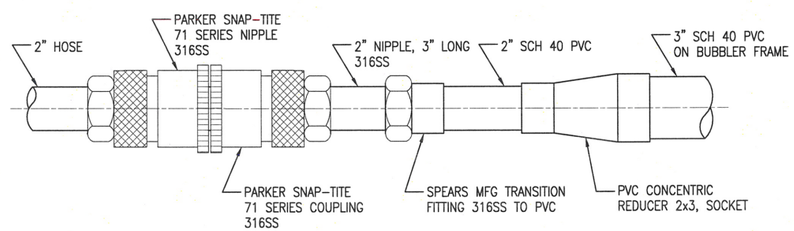

AIR BUBBLER PIPING CONNECTION DETAIL 4 M-1 M-1

MARK	REVISION DESCRIPTION	BY	APP.	DATE

BergerABAM
33301 9th Avenue South, Suite 300
Federal Way, Washington 98003-2600
(206) 431-2300 Fax: (206) 431-2250

KIEWIT/MANSON, AJV

REGISTERED PROFESSIONAL ENGINEER CARL ERIK LARSON REG. NO. 31268 MECHANICAL STATE OF CALIFORNIA 2/9/15

DRAWN BY TJB
DESIGN BY TJB
CHECK BY CEL
PROJ MGR CEL

KIEWIT/MANSON
SFOBB EAST SPAN DISMANTLING PROJECT
BUBBLE CURTAIN DESIGN

AIR BUBBLER PIPING DIAGRAM AND DETAILS

DRAWING NO. M-1
PROJECT NO. A15.0136.00
DATE: 2/9/2015
SHEET NO. 7 OF 7

Last Saved by: Cpeck on: Feb 9, 2015 3:50 PM File: G:\2014\1407310\DWG\MM-1.dwg

APPENDIX C: Alternatives Analysis

GANDA

Garcia and Associates
1512 Franklin Street,
Oakland, CA 94612
Phone: (510) 891-0024 Fax: (510) 891-0027

To: Mr. Stefan Galvez (SFOBB Environmental Compliance Manager)

From: Alex Pries

Date: January 30, 2015

RE: **SFOBB East Span Seismic Safety Project (SFOBB Project) Marine Mammal Impacts from Pier E3 Cofferdam Installation**

Removal of the marine foundations of the original east span of the San Francisco-Oakland Bay Bridge (SFOBB) is required as part of regulatory requirements for the SFOBB East Span Seismic Safety Project (SFOBB Project). Due to the schedule, cost, and environmental benefits when compared to mechanical demolition, the California Department of Transportation (Department) has proposed controlled implosion as the preferred alternative methodology of removal. Potential impacts to biological resources by the proposed demolition were previously presented in a biological evaluation. Up to a total of 22 marine foundations of the original east span may be removed to meet regulatory requirements. Three of these piers, E3 – E5, are deep-water caissons that require more complex methods for their removal.

The purpose of this memorandum is to present the evaluation of methodology and potential impacts to marine mammals from removal of Pier E3, the deepest marine foundation of the SFOBB, by means of installing a cofferdam around the structure prior to mechanical dismantling via ram hoe or saw cutting. This method is evaluated as an alternative to the preferred method of removing Pier E3 through controlled implosion.

Description of the Alternative to the Proposed Action:

For the purpose of analysis, the Department has prepared a conceptual plan for dismantling the concrete caisson supporting Pier E3, which is located approximately 1,535 feet (468 meters) east of Yerba Buena Island (YBI) in San Francisco Bay. Prior to demolition of this marine foundation, the Department would complete the removal of the above-water bridge superstructure, including the original cantilever span, truss, truss span, and supporting tower on Pier E3. Removal of the marine foundation via mechanical dismantling methods would require installation of a cofferdam, dewatering activities, and use of conventional equipment (i.e., ram

hoe or wire saw) to break the pier into smaller pieces for disposal.

Impacts to marine mammals from the proposed action would largely come from the marine propagation of impulse sound associated with the impact driving of piling to support and build the cofferdam. Exposure to impulse sound can result in short-term hearing loss (i.e., temporary threshold shift [TTS]), permanent hearing loss (i.e., permanent threshold shift [PTS]), and a variety of physical injuries up to mortality. Once installed, the area inside the cofferdam would be dewatered and the sound associated with mechanical dismantling is expected to be negligible in the marine environment. Thus, any impacts to marine mammals or their habitat from dismantling activities would be minimal. Impacts to marine mammals and their habitat from the sound associated with pile driving during cofferdam installation will be the key focus of this analysis. The use of vibratory methods to install piles is preferred and believed to have lesser impacts to marine mammals than impact pile driving methods. Vibratory installation of piles works well in soft sediments, but can be difficult if rocks, debris, or harder sediment layers impede installation of the pile. Additionally, for the Pier E3 cofferdam, obtaining a secure final elevation for the larger piles will be particularly critical to ensure the cofferdam's structural stability for holding back Bay waters and to create a safe working environment. As a result, Department engineers concluded for this analysis that the large diameter piles (e.g., 54" bulkhead pile and king pile) would require impact driving, and not vibratory methods, to obtain final, secure pile depth.

Installation of the Pier E3 cofferdam is anticipated to require the following pile array:

- Thirty six (36) 54" diameter 150 foot long bulkhead pipe piles [to prevent vessel impacts from breaching the cofferdam];
- One-hundred seventy (170) 145 foot long king or H-piles [HZM 1180M-D];
- Eighteen (18) 24" diameter 85 foot long support pipe piles;
- One-hundred seventy (170) 145 foot long sheet piles [AZ 26-700]

For the purpose of this analysis, installation of the above materials to a final elevation of approximately 57 feet below mudline (-114 feet 1929 NGVD) are as follows:

- All 36 bulkhead piles (54" diameter) would be impact driven with an attenuation system (i.e., bubble curtain) installed around the pile. An estimated 1,425 total strikes per pile would be required to reach final elevation. The anticipated impact hammer would be a Delmag D-100 with hammer energies between 214-360 kilojoules (kJ) per strike.
- All 170 king (H) piles would be impact driven with an attenuation system installed around the pile. An estimated 4,800 total strikes per pile would be required to reach final elevation. The anticipated hammer would be a Delmag D-100 with hammer energies between 214-360 kilojoules (kJ) per strike.
- All 18 support pipe piles (24" diameter) would be installed using a vibratory hammer, and then pile proofed to confirm elevation and stability. Pile proofing would involve a maximum of 20 strikes per pile using unattenuated impact driving. However, the use of an attenuation system is not practical given the amount of time required to set up

the system for a small number of strikes. The anticipated hammer for pile proofing of the support piles would be a Delmag 80 with hammer energies between 171-288 kJ per strike.

- All sheet piles (170 total) would be installed using a vibratory hammer, and one half (85 total) also would be proofed to confirm elevation and stability. As with the support piles, sheet pile proofing would involve a maximum of 20 strikes per sheet pile using unattenuated impact driving. The anticipated hammer for sheet pile proofing and unattenuated impact driving of sheet piles would be a Delmag D-46 with hammer energies between 71-166 kJ per strike.

Existing Guidance on SFOBB Pile-Driving Activities:

On December 18, 2013, the National Marine Fisheries Service (NMFS) issued an Incidental Harassment Authorization (IHA) to the Department for impacts to marine mammals from pile-driving activities associated with the SFOBB Project. The IHA distinguishes harassment into Levels A and B. Level A Harassment includes PTS, physical injury, or mortality. Level B Harassment is subdivided into Level B Behavioral Harassment, which may elicit a behavioral response from a marine mammal and Level B TTS Harassment. This document provided NMFS' guidance on the allowed amount of incidental exposure to Level B Behavioral Harassment for marine mammals from the SFOBB Project (Table 1). In addition, the IHA identifies temporary exclusion zones and Level B Behavioral harassment zones associated with Project pile-driving activities. Temporary exclusion zones are areas where individuals might be subject to Level B TTS Harassment and Level A Harassment during pile-driving activities. No pile driving is permitted to begin if a marine mammal is present in the temporary exclusion zone before activities begin. Pile-driving activities may occur when individual marine mammals are present in the Level B Behavioral Harassment zone. These zones are presented in Table 2, and include:

- Exclusion zones [Level B Harassment (TTS) or Level A Harassment (PTS or greater harm)] where sound pressure levels exceed 180 dB RMS (cetaceans) and 190 dB RMS (pinnipeds);
- A Level B Behavioral Harassment zone for impact pile driving noise level of equal to or greater than 160 dB RMS, and for vibratory pile driving noise level equal to or greater than 120 dB RMS.

Prior hydroacoustic monitoring of the area around the SFOBB has indicated that ambient noise levels often are greater than 120 dB, the level cited above for the onset of behavioral changes in marine mammals from vibratory pile driving. This portion of the Bay is a busy area with marine vessels transiting through the area on their way to the Port of Oakland. Because of this, it can be difficult to measure the distance to 120 dB RMS in the field. As a result, NMFS has established a distance of 2,000 meters from pile driving as the exposure area for Level B Behavioral Harassment from vibratory pile driving. This distance is assumed as the point where noise levels reach their baseline, or ambient, Bay conditions.

Table 1. Species and number of marine mammals allowed exposure (or 'take') to Level B Behavioral Harassment under the 2014 IHA for pile-driving activities.

Species	Take Allowed
Pacific harbor seal	50
California sea lion	10
Harbor porpoise	10
Gray whale	5

Table 2. Temporary Exclusion Zones [Level B (TTS) and Level A (PTS or greater harm) Harassment] and Level B Behavioral Harassment Zones for SFOBB pile-driving activities from 2014 IHA.

		Level B Behavioral Harassment Zone		Temporary Exclusion Zone [Level B (TTS) and Level A (PTS or greater harm) Harassment]	
Pile Driving Activity	**Pile Size**	**Distance to 120 dB RMS (m)[1]**	**Distance to 160 dB RMS (m)[2]**	**Distance to 180 dB RMS (m)[2] (cetaceans)**	**Distance to 190 dB RMS (m)[2] (pinnipeds)**
Vibratory Driving	24"	2,000	NA	NA	NA
	36"	2,000	NA	NA	NA
	Sheet pile	2,000	NA	NA	NA
Attenuated Impact Driving	24"	NA	1,000	235	95
	36"	NA	1,000	235	95
Unattenuated Pile Proofing	24"	NA	1,000	235	95
	36"	NA	1,000	235	95
Unattenuated Impact Driving	H-Pile	NA	1,000	235	95

[1] Threshold only applies to vibratory pile driving.
[2] Threshold only applies to impact pile driving.

Under the 2014 IHA, marine mammal observers are required to monitor areas around SFOBB prior to the initiation of pile driving activities. If individual marine mammals are within the identified temporary exclusion zones (180 dB or 190 dB RMS), pile driving activities will be delayed until the individual leaves the area. If an individual enters the 180 or 190 dB RMS exclusion zone after the commencement of pile driving, the Department is required to notify NMFS within 24 hours.

Hydroacoustic Analysis of Pier E3 Cofferdam (under current regulations)

A calculation of the distance to temporary exclusion (Level B [TTS] or Level A Harassment) zones and Level B Behavioral Harassment zones for installation of the Pier E3 cofferdam is presented below based on hydroacoustic analyses completed by Illingworth & Rodkin. Data

from the *Compendium of Pile Driving Sound Data* were used to establish the baseline source levels. The average RMS levels recorded for several projects were used to predict potential sound levels for the Pier E3 cofferdam installation. For installation of the 24" support pipe piles, data from the Amorco Wharf repair in San Francisco Bay, Tongue Point dock repair on the Columbia River in Oregon, Rodeo Dock repair in San Francisco Bay, Schuyler Heim Bridge replacement project in the Port of Long Beach, the Northern Rail project in Alaska, and the retrofit of the Richmond-San Rafael Bridge in San Francisco Bay were considered. For the 54" bulkhead pipe piles, data from the driving of 48" piles for the SFOBB Project were used exclusively. Distances were calculated for one impacted pile per day un-attenuated and attenuated with the assumption of 25 strikes per foot (1,425 total strikes per pile) for each pile type during impact driving. The maximum of 20 strikes per pile was assumed for unattenuated pile proofing of sheet piles and 24" support piles. Table 3 summarizes the distance to Temporary Exclusion and Level B Behavioral Harassment zones per pile activity for the Pier E3 cofferdam, under adherence to current SFOBB Project pile-driving regulations.

Table 3. Modeled Temporary Exclusion and Level B Behavioral Harassment Zones for the Pier E3 cofferdam.

		Level B Behavioral Harassment Zone		**Temporary Exclusion Zone (Level B [TTS] and Level A [PTS or greater harm] Harassment)**	
Pile Driving Activity	**Pile Size**	**Distance to 120 dB RMS (m)[1]**	**Distance to 160 dB RMS (m)[2]**	**Distance to 180 dB RMS (m)[2] (cetaceans)**	**Distance to 190 dB RMS (m)[2] (pinnipeds)**
Vibratory Driving	24"	2,000	--	--	--
	Sheet Pile	2,000	--	--	--
Attenuated Impact Driving	54"	--	338	23	6
	King Pile	--	225	15	4
Unattenuated Pile Proofing	24"	--	582	39	10
	Sheet Pile	--	508	34	9

[1] Threshold only applies to vibratory pile driving.
[2] Threshold only applies to impact pile driving.

SUMMARY

In summary, the total area subject to Level B Behavioral Harassment of marine mammals is much larger for the cofferdam installation scenario, largely due to the increased time required to install the piles than for the controlled implosion scenario. The cumulative area exposed to Level B (TTS) or Level A (PTS or greater harm) Harassment of marine mammals is higher for the one-day controlled implosion (109 acres) when compared at the 190 dB RMS threshold for pinnipeds (9.3 acres) during cofferdam installation. However, for cetaceans (the 180 dB RMS threshold), cumulative exposure during pile driving would be approximately one and a half times the area of the controlled implosion scenario (147 acres versus 109 acres). The actual risk of Level A Harassment exposure to individual marine mammals from either demolition method is unlikely

given the implementation of exclusion zones and monitoring. Exposure to Level B (TTS) Harassment of three harbor seals may occur from the controlled implosion. In contrast, the increased time (months to years) required to install the cofferdam, along with historical monitoring data, suggest there is a potential for equal, or greater, TTS exposure under this method. This could occur even with effective monitoring, because current regulations allow for continued pile driving if an individual enters the exclusion zone after work has commenced

The proposed installation of a Pier E3 cofferdam under adherence to current SFOBB Project IHA pile-driving regulations for marine mammals is achievable. The modeled distances for impact and vibratory driving of the piles required for the cofferdam are well within the accepted distances as defined in the Project's current IHA. However, the time and duration required to install all piles for the cofferdam also would increase the potential for individual exposure. With a total of 394 piles proposed for the Pier E3 cofferdam and more restrictive regulations on daily sound exposure from pile driving under the 2012 NMFS Biological Opinion (BO) for marine fish, pile driving for the cofferdam likely would occur for months to years. This increased duration for pile driving may increase the potential risk for individual exposure to harassment.

While marine mammal monitoring during pile driving for the E3 cofferdam may result in no exposures greater than behavioral harassment, the installation of piles for the cofferdam likely will result in a similar outcome as the controlled implosion (e.g., some TTS exposure). This is because the increased duration of pile driving actions (months/years) when compared to the controlled implosion (seconds) may increase the probability of exposing an individual to TTS. Since 2001, a total of 19 harbor seals and 3 California sea lions have been observed, during 210 days of monitoring for the SFOBB Project, entering the Level B (TTS) Harassment Zone after pile driving activities began. These numbers suggest there is about a 10% chance of encountering a harbor seal daily inside the Level B (TTS) Harassment Zone while pile driving. For California sea lions, this chance is about 1.5%. Using these values and an assumption of pile-driving for the cofferdam requiring 394 days (i.e, one pile per day), potential TTS exposure could occur to 39 harbor seals and six California sea lions.

In contrast, the current blast plan would remove Pier E3 down to mudline and the detonation sequence would last for approximately **5 to 6** seconds. On-site work in advance of the implosion would likely take months, but is anticipated to result in negligible disturbance to the marine environment when compared to the hydroacoustic impacts associated with pile driving. In late 2013, NMFS developed new regulatory thresholds for marine mammals subject to underwater blasting. The new thresholds use Sound Exposure Level (SEL) and peak pressure (in dB) thresholds to establish areas of potential behavioral harassment, Level A harassment, or Level B harassment for marine mammals. The new thresholds establish different threshold criteria for underwater explosions compared to pile driving. This makes comparisons to the same sound exposure threshold difficult. However, the difference in the area of exposure for a threshold at which an effect may occur remains a valid comparison. As a result, comparison of the total acres affected over time for the exclusion zone thresholds for cofferdam construction is compared to the total acres affected over time for exclusion zone thresholds for the controlled implosion.

Hydroacoustic analysis of the Pier E3 implosion using the revised (2013) thresholds indicates the largest distance to the Level B Behavioral Harassment zone would be 13,564 meters (44,500

feet) for harbor porpoise (the most acoustically sensitive species). The distance to Level B (TTS) Harassment Zone for harbor porpoise was modeled at 8,077 meters (26,500 feet). However, the likelihood of this species occurring within the Bay during the implosion is very low and the species has not been detected within the project area during 210 days of marine mammal monitoring to date. However, real-time acoustic monitoring for harbor porpoises will be proposed in advance and during the implosion to ensure this species is not in the immediate area. For the species expected to be present around Pier E3 (i.e., harbor seal, California sea lion, and Northern elephant sea), the modeled distance to the Level B Behavioral Harassment zone was 2,957 meters (9,700 feet). The distance to the Level B (TTS) Harassment zone was 1,737 meters (5,700 feet), which does include known foraging areas for harbor seals at YBI, Clipper Cove, and southeast of YBI. The distance to the Level A (PTS or greater harm) Harassment zone, which reflects the implosion's marine mammal exclusion zone, for these species is 354 meters (1,160 feet). This distance could be effectively monitored under the existing marine mammal monitoring plan for the SFOBB Project. Inclusion of the Level B Behavioral Harassment Zone into the implosion's exclusion zone is not feasible due to the high probability that harbor seals will occupy known foraging areas near YBI and Clipper Cove. Prevention of Level B (TTS) exposure to individual seals within these areas could delay the implosion during a small window of opportunity.

The Pier E3 blast was modeled to potentially result in Level B (TTS) Harassment exposure to three Pacific harbor seals. This assessment is based on historic marine mammal densities in the exposure area and the implosion's duration of 5 to 6 seconds. In addition, six harbor seals, one Northern elephant seal, and one harbor porpoise would potentially be within the implosion's behavioral response zone. Through the implementation of exclusion zones and monitoring, no individuals would be subject to Level A (PTS or greater harm) Harassment.

The duration of potential exposure to marine mammals affected from cofferdam installation can be expressed as the product of the daily amount of acres affected multiplied by the number of days of effect. This value also can be interpreted as the cumulative amount of acres exposed during installation of a Pier E3 cofferdam. Table 4 presents cumulative acre information for marine mammal exposure under the assumption of one pile driven per day plus an estimated exposure to marine mammals from the controlled implosion. In reality, the 2012 BO's more restrictive pile-driving regulations for marine fish would likely limit the amount of pile driving allowed on a daily basis. However, for the sake of this comparative analysis we have ignored this limitation.

Table 4. Comparison of Marine Mammal Hydroacoustic Impacts from Pier E3 Cofferdam Installation versus Controlled Implosion

				Level B Behavioral Harassment Zone				Temporary Exclusion Zone (Level B [TTS] and Level A [PTS or greater harm] Harassment)			
Construction Approach	**METHOD**	**Pile Type**	**Days Required[1]**	**Acres Affected to 120 dB RMS (Per Pile)**	**Acres Affected to 120 dB RMS (Total)**	**Acres Affected to 160 dB RMS (Per Pile)**	**Acres Affected to 160 dB RMS (Total)**	**Acres Affected to 180 dB RMS (Per Pile)**	**Acres Affected to 180 dB RMS (Total)**	**Acres Affected to 190 dB RMS (Per Pile)**	**Acres Affected to 190 dB RMS (Total)**
Cofferdam Installation	Vibratory[2] Driving	24”	18	3,113	56,034	N/A	N/A	N/A	N/A	N/A	N/A
		Sheet Pile	170	3,113	529,210	N/A	N/A	N/A	N/A	N/A	N/A
	Attenuated Impact Driving	Bulkhead 54”	36	N/A	N/A	88	3,168	0.4	14.4	0.03	1.1
		King Pile	170	N/A	N/A	39	6,630	0.2	34	0.01	1.7
	Unattenuated Pile Proofing	24”	18	N/A	N/A	262	4,716	1.2	22	0.08	1.4
		Sheet Pile	85	N/A	N/A	200	17,000	0.9	76.5	0.06	5.1
	Totals[3]	-	**497**	**6,226**	**585,244**	**589**	**31,514**	**2.7**	**147**	**0.18**	**9.3**
				Level B Behavioral Harassment Zone (Total Acres Affected)[4]		**Level B (TTS) Harassment Zone (Total Acres Affected)[5]**		**Temporary Exclusion Zone (Level A [PTS or greater harm] Harassment) (Total Acres Affected)[6]**			
Controlled Implosion	Attenuated Implosion	NONE	**1**	**4,401**		**1,854**		**109**			

[1] Assumption that one pile per day can be driven or vibrated.
[2] Vibratory drilling does not generate enough noise to reach Level B or Level A Harassment
[3] Totals tally Total Acres
[4] Area is calculated to 172 dB SEL Criteria
[5] Area is calculated to 177 dB SEL Criteria
[6] Area is to calculated to 192 dB SEL Criteria